BEETLE A Series

User Manual

01750342843B

DieboldNixdorf.com

Table of Contents

1 Manufacturer´s Certification 1-1
1.1 FCC-Class A Declaration 1-1
1.2 Energy Efficiency 1-1
1.3 Wireless Declaration of Conformity 1-2
1.4 FCC RF exposure warning 1-4
1.5 Radio Frequency (RF) Exposure Information 1-4
1.6 Important Notes 1-5
1.7 Safety Notes 1-6

2 Supplier’s Declaration of Conformity 2-1

3 Introduction 3-1
3.1 About this manual 3-1
3.2 Care of the BEETLE A Series 3-1
3.3 Recycling the BEETLE A Series 3-1
3.4 Warranty 3-2
3.5 Lithium Battery 3-2
3.6 Unpacking and Checking the Delivery Unit 3-3

4 Basic settings 4-1
4.1 Components 4-1
4.1.1 Processor Type 4-1
4.1.2 Memory Options 4-1
4.1.3 M.2 SSD Options 4-1

5 Setting Up the Device 5-1
5.1 Ergonomic Terminal Workplace 5-1

6 Overview 6-1
6.1 Front View with Stand 6-1
6.2 Back View with Stand 6-2
6.3 AC Power Adapter 6-3
6.4 Front Panel 6-4

7 Projected Capacitive Touch Screen 7-1
7.1 General Information 7-1
7.2 Instructions for Using the Touch Screen 7-1
7.3 Cleaning Instructions 7-1

8 Planning the Installation 8-1
8.1 Dimensions 8-1
8.2 Desktop version 8-1
8.2.1 Desktop Stand Standard 8-1
8.2.2 Wall mount version 8-3
8.3 Required operation space 8-4
8.4 Installation site requirements 8-5
8.4.1 Desktop version 8-5
8.4.2 Wall mount version 8-5

Copyright © 2020, Diebold Nixdorf

9 Installation to a stand 9-1
9.1 Installing system to the stand (standard) 9-1
9.1.1 Preparing the stand 9-1
9.1.2 Preparing the system 9-2
9.1.3 Installing system to the stand 9-2
9.2 Installing system to the stand (with I/O hub) 9-4
9.2.1 Preparing the stand 9-4
9.2.2 Preparing the system 9-6
9.2.3 Installing system to the stand 9-6
9.3 Installing system to the stand (with cable covers) 9-10
9.3.1 Preparing the stand 9-10
9.3.2 Preparing the system 9-11
9.3.3 Installing system to the stand 9-11

10 Connector Panel 10-1
10.1 Connecting cables 10-2
10.2 Disconnecting cables 10-3

11 Storage Media 11-1
11.1 Replacement of Solid State Disk 11-1
11.2 Replacement of the RAM 11-3

12 Installing System to a Wall 12-1
12.1 Things you need 12-1
12.2 Mounting height 12-2
12.3 Mounting location 12-2
12.4 Installation 12-3
12.4.1 Fix wall mount back plate to the wall 12-3
12.4.2 Fix wall mount front plate to the system 12-5
12.4.3 Secure the system to the wall 12-5

13 Mounting a Second Display (A1150/D1101) 13-1
13.1 Installing the D1101 using an adapter kit 13-1

14 Peripherals (optional) 14-1
14.1 Waiter Lock 14-1
14.1.1 Installation 14-1
14.2 Magnetic Swipe Card Reader (MSR) 14-6
14.2.1 How to operate 14-6
14.2.2 Cleaning instructions 14-6
14.2.3 Installation 14-6
14.3 NFC Module 14-9
14.3.1 Installation 14-9

15 Starting Up the System 15-1

16 Error Reporting 16-1

17 POST Code 17-1

18 Technical Data 18-1

Copyright © 2020, Diebold Nixdorf

18.1 AC Power Adapter 18-3
18.2 NFC Module 18-4
18.3 I/O Hub 18-5
18.3.1 Block Diagram 18-7
18.4 Total Available Power 18-8

19 Appendix 19-1
19.1 Approved Printers List 19-1

1 Manufacturer´s Certification

The device complies with the requirements of the EEC directive 2014/30/EU with regard to ‘Electro-magnetic compatibility" and 2014/35/EU “Low Voltage Directive” and RoHS directive 2011/65/EU.

Therefore, you will find the CE mark on the device or packaging.

In addition, the Beetle A Series has received the cTUVus symbol.

1.1 FCC-Class A Declaration

This equipment has been tested and found to comply with the limits for a Class A digital device, pursuant to part 15 of the FCC Rules. These limits are designed to provide reasonable protection against harmful interference when the equipment is operated in a commercial environment. This equipment generates, uses, and can radiate radio frequency energy and, if not installed and used in accordance with the instruction manual, may cause harmful interference to radio communications. Operation of this equipment in a residential area is likely to cause harmful interference in which case the user will be required to correct the interference at his own expense. Modifications not authorized by the manufacturer may void users authority to operate this device.

FCC Caution: Any changes or modifications not expressly approved by the party responsible for compliance could void the user's authority to operate this equipment.

This transmitter must not be co-located or operating in conjunction with any other antenna or transmitter.

CAN ICES-3 (A)/NMB-3 (A)

1.2 Energy Efficiency

NOTE

Information on Energy Efficiency will be available in the next revision of the User Manual.

1.3 Wireless Declaration of Conformity

Hereby, Diebold Nixdorf declares that this device is in compliance with the essential requirements and other relevant provisions of Directive 2014/53/EC.

Cseˇky [Czech]:	Diebold Nixdorf tímto prohlašuje, že tento zařízení je ve shodě se základními požadavky a dalšími příslušnými ustanoveními směrnice 2014/53/ES.
Dansk [Danish]:	Undertegnede Diebold Nixdorf erklærer herved, at følgende udstyr Enhed overholder de væsentlige krav og øvrige relevante krav i direktiv 2014/53/EF.
Deutsch [German]:	Hiermit erklärt Diebold Nixdorf, dass sich das Gerät in Übereinstimmung mit den grundlegenden Anforderungen und den übrigen einschlägigen Bestimmungen der Richtlinie 2014/53/EG befindet.
Eesti [Estonian]:	Käesolevaga kinnitab Diebold Nixdorf seadme vastavust direktiivi 2014/53/EÜ põhinõuetele ja nimetatud dire ktiivist tulenevatele teistele asjakohastele sätetele.
English:	Hereby, Diebold Nixdorf declares that this device is in compliance with the essential requirements and other relevant provisions of Directive 2014/53/EC.
Español [Spanish]:	Por medio de la presente declara que el dispositivo cumple con los requisitos esenciales y cualesquiera otras disposiciones aplicables o exigibles de la Directiva 2014/53/CE.
Ελληνική [Greek]:	ΜΕ ΤΗΝ ΠΑΡΟΥΣΑ Diebold Nixdorf ΔΗΛΩΝΕΙ ΟΤΙ συσκευή ΣΥΜΜΟΡΦΩΝΕΤΑΙ ΠΡΟΣ ΤΙΣ ΟΥΣΙΩΔΕΙΣ ΑΠΑΙΤΗΣΕΙΣ ΚΑΙ ΤΙΣ ΛΟΙΠΕΣ ΣΧΕΤΙΚΕΣ ΔΙΑΤΑΞΕΙΣ ΤΗΣ ΟΔΗΓΙΑΣ 2014/53/ΕΚ.
Français [French]:	Par la présente Diebold Nixdorf déclare que l'appareil est conforme aux exigences essentielles et aux autres dispositions pertinentes de la directive 2014/53/CE.
Italiano [Italian]:	Con la presente Diebold Nixdorf dichiara che questo dispositivo è conforme ai requisiti essenziali ed alle altre disposizioni pertinenti stabilite dalla direttiva 2014/53/CE.
Latviski [Latvian]:	Ar šo Diebold Nixdorf deklarē, ka ierīce atbilst Direktīvas 2014/53/EK būtiskajām prasībām un citiem ar to saistītajiem noteikumiem.
Lietuvių [Lithuanian]:	Šiuo Diebold Nixdorf deklaruoja, kad šis prietaisas atitinka esminius reikalavimus ir kitas 2014/53/EB Direktyvos nuostatas.
Nederlands [Dutch]:	Hierbij verklaart Diebold Nixdorf dat het toestel apparaat in overeenstemming is met de essentiële eisen en de andere relevante bepalingen van richtlijn 2014/53/EG.
Malti [Maltese]:	Hawnhekk, Diebold Nixdorf jiddikjara li dan apparat jikkonforma mal-ħtiġijiet essenzjali u ma provvedimenti oħrajn relevanti li hemm fid-Dirrettiva 2014/53/EC.

Copyright © 2020, Diebold Nixdorf

Magyar [Hungarian]:	Alulírott, Diebold Nixdorf nyilatkozom, hogy a eszköz megfelel a vonatkozó alapvetõ követelményeknek és az 2014/53/EC irányelv egyéb elõírásainak.
Polski [Polish]:	Niniejszym Diebold Nixdorf oświadcza, że urządzenie jest zgodny z zasadniczymi wymogami oraz pozostałymi stosownymi postanowieniami Dyrektywy 2014/53/EC.
Português [Portuguese]:	Diebold Nixdorf declara que este dispositivo está conforme com os requisitos essenciais e outras disposições da Directiva 2014/53/CE.
Slovensko [Slovenian]:	Diebold Nixdorf izjavlja, da je ta Naprava v skladu z bistvenimi zahtevami in ostalimi relevantnimi določili direktive 2014/53/ES.
Slovensky [Slovak]:	Diebold Nixdorf týmto vyhlasuje, že zariadenie spĺňa základné požiadavky a všetky príslušné ustanovenia Smernice 2014/53/ES.
Suomi [Finnish]:	Diebold Nixdorf vakuuttaa täten että laite on direktiivin 2014/53/EY oleellisten vaatimusten ja sitä koskevien direktiivin muiden eh tojen mukainen.
Svenska [Swedish]:	Härmed intygar Diebold Nixdorf att denna enhet står I överensstämmelse med de väsentliga egenskapskrav och övriga relevanta bestämmelser som framgår av direktiv 2014/53/EG.
Íslenska [Icelandic]:	Hér með lýsir Diebold Nixdorf yfir því að tæki er í samræmi við grunnkröfur og aðrar kröfur, sem gerðar eru í tilskipun 2014/53/EC.
Norsk [Norwegian]:	Diebold Nixdorf erklærer herved at utstyret enhet er i samsvar med de grunnleggende krav og øvrige relevante krav i direktiv 2014/53/EF.

The declaration of conformity may be consulted at **http://www.dieboldnixdorf.com**.

Copyright © 2020, Diebold Nixdorf

1.4 FCC RF exposure warning

This equipment must be installed and operated in accordance with provided instructions and the antenna(s) used for this transmitter must be installed to provide a separation distance of at least 20cm from all persons and must not be co-located or operating in conjunction with any other antenna or transmitter. End-users and installers must be provide with antenna installation instructions and transmitter operating conditions for satisfying RF exposure compliance.

This device contains licence-exempt transmitter(s)/receiver(s) that comply with Innovation, Science and Economic Development Canada’s licence-exempt RSS(s). Operation is subject to the following two conditions:

1.This device may not cause interference.

2.This device must accept any interference, including interference that may cause undesired operation of the device.

L’émetteur/récepteur exempt de licence contenu dans le présent appareil est conforme aux CNR d’Innovation, Sciences et Développement économique Canada applicables aux appareils radio exempts de licence. L’exploitation est autorisée aux deux conditions suivantes :

1.L’appareil ne doit pas produire de brouillage;

2.L’appareil doit accepter tout brouillage radioélectrique subi, même si le brouillage est susceptible d’en compromettre le fonctionnement.

1.5 Radio Frequency (RF) Exposure Information

The radiated output power of the Wireless Device is below the Industry Canada (IC) radio frequency exposure limits. The Wireless Device should be used in such a manner such that the potential for human contact during normal operation is minimized.

This device has also been evaluated and shown compliant with the IC RF Exposure limits under mobile exposure conditions.(antennas are greater than 20cm from a person's body).

Informations concernant l'exposition aux fréquences radio (RF)

La puissance de sortieémise par l’appareil de sans fil est inférieure à la limite d'exposition aux fréquences radio d'Industry Canada (IC). Utilisez l’appareil de sans fil de façon à minimiser les contacts humains lors du fonctionnement normal.

Ce périphérique a également étéévalué et démontré conforme aux limites d'exposition aux RF d'IC dans des conditions d'exposition à des appareils mobiles(antennes sont supérieures à 20 cm à partir du corps d'une personne).

Copyright © 2020, Diebold Nixdorf

1.6 Important Notes

Diebold Nixdorf is not responsible for any radio and television malfunctions which emerge from unauthorized changes in the device. Make sure that only cables and devices may be connected which are admitted by Diebold Nixdorf. The user is responsible for any malfunctions that emerge from the actions mentioned before.

The device may only be installed, or repaired by authorized qualified personnel. Unauthorized opening of the device and inexpertly carried-out repairs may not only seriously jeopardize the safety of the user, but also cancel all warranty and liability agreements.

Expansion cards with electrostatically sensitive devices (ESD) may be marked with this sticker.

CAUTION: Hot surface. Do not touch.

When opening the device or handling modules fitted with ESD, please observe the following instructions, which pertain to all electrostatic sensitive devices (ESDs):

- Always use the antistatic kit.
- Statically discharge yourself, for example by touching an earthed object (such as a heat radiator) before beginning to work with ESD-labeled components.
- Likewise, all equipment and tools used in working with such components must be free of static charge.
- Pull the mains plug before inserting or removing such components.
- Only handle such components by their edges.
- Never touch any terminal pins of the strip conductors on such components.

Copyright © 2020, Diebold Nixdorf

1.7 Safety Notes

The Beetle A Series conforms to the current safety standards for data processing equipment.

- If this device is taken from a cold environment into the operating room, moisture condensation may form. The device must be absolutely dry before being put into service; an acclimatization period of at least two hours must therefore be observed.
- This device is equipped with a safety-tested power cable and may be connected only to a prescribed grounded-contact power socket.
- When setting up the device, ensure that the power socket on the device and the grounded-contact power socket are easily accessible.
- Whenever work of any kind is done on the device, as well as when data cables are plugged and/or unplugged, the device must be completely disconnected from the line voltage. To do so, turn the device off and unplug the power cord.
- To disconnect the device from the supply voltage completely, switch off the device and disconnect the power plug of the system.
- Never plug in or unplug data communication lines during thunderstorms.
- Protect devices from vibrations, dust, moisture and heat.
- Always dispose of used parts, such as batteries, in an environmentally safe manner.
- In emergencies (e.g. damaged housing or damaged power cable, penetration by liquids or foreign bodies), the device must be switched off immediately, the power plug disconnected and the Customer Service of Diebold Nixdorf or your dealer must be notified.
- Your Beetle A Series system is the result of modern technical innovation. So please see for according structural and technical surroundings to guarantee a faultless and efficient work of your Beetle A Series. Therefore, you should connect your Beetle A Series, or other IT-devices only to power supply systems with separately guided protective earth conductor (PE). This kind of electricity system is known as TN-S network. Do not use PEN conductors!
- Please also observe the recommendations of the norm DIN VDE 0100, Part 540, Appendix C2 as well as EN50174-2, §5.4.3.Thus you can help to avoid possible malfunctions.
- Only use the storage medium recommended or approved by Diebold Nixdorf.
- This equipment is not suitable for use in locations where children are likely to be present.
- "CAUTION: Risk of Explosion if Battery is replaced by an Incorrect Type. Dispose of Used Batteries According to the Instructions."/“ATTENTION: Risque d’explosion si la batterie est remplacée par un type incorrect. Mettre au rebus les batteries usagées selon les instructions.“
- Please avoid extreme conditions, such as:
  - high or low extreme temperatures that a battery can be subjected to during use, storage or transportation.
  - low air pressure at high altitude.
- Replacement of a battery with an incorrect type can cause an explosion.
- Disposal of a battery into fire or a hot oven, or mechanically crushing or cutting of a battery can result in an explosion.

Copyright © 2020, Diebold Nixdorf

- Leaving a battery in an extremely high temperature surrounding environment can result in an explosion or the leakage of flammable liquid or gas.
- A battery subjected to extremely low air pressure may result in an explosion or the leakage of flammable liquid or gas.

Copyright © 2020, Diebold Nixdorf

2 Supplier’s Declaration of Conformity

Product Description: POS Terminal

Model: Beetle A Series

Party issuing Supplier’s Declaration of Conformity

Diebold Nixdorf Singapore PTE. LTD.

30A Kallang Place

#04-01

Singapore 339213

Phone: +65 6747 3828

Responsible Party – U.S. Contact Information

Diebold Nixdorf

5995 Mayfair Road

N. Canton, OH 44720 / USA

Phone: +1 330 490 5049

FCC Compliance Statement (for products subject to Part 15)

This device complies with Part 15 of the FCC Rules. Operation is subject to the following two conditions:

(1) This device may not cause harmful interference, and

(2) this device must accept any interference received, including interference that may cause undesired operation.

Copyright © 2020, Diebold Nixdorf

3 Introduction

The Beetle A Series belongs to a new generation of the BEETLE all-in-one family to meet the demands for slim-look and bezel with narrower borders. It features the new Whiskey Lake U SOC along with other newer technologies such as USB Type C.

3.1 About this manual

This documentation is intended to help you to work with the Beetle A Series system and to serve as a reference work. The detailed table of contents will help you find the desired information quickly and easily.

	⚠ **WARNING**
	This symbol is used for warnings.

	NOTE
	Notes in this manual are marked by this symbol.

The type and scope of application programs depend on the customer's own selection; therefore, software will not be discussed further in this manual.

3.2 Care of the BEETLE A Series

Clean your system's housing at regular intervals with a dry, lint-free cloth. If this does not suffice please use a suitable plastic-surface cleaner which you can order from Diebold Nixdorf.

For more information about cleaning read the chapter "Projective Capacitive Touch Screen". When cleaning always make sure that the power plug is disconnected and that no liquid finds its way into the device.

3.3 Recycling the BEETLE A Series

Environmental protection does not begin when the time has come to dispose of the Beetle A Series; it begins with the manufacturer. This product was designed according to our internal norm "Environmental conscious product design and development".

The system is manufactured without the use of CFC and CHC and is produced mainly from reusable components and materials.

Please do not stick labels onto plastic case parts. This would help us to reuse components and material.

But there are still some parts that are not reusable. Diebold Nixdorf guarantees the environmentally safe disposal of these parts in a Recycling Center, which is certified pursuant to ISO 9001 and ISO 14001.

Copyright © 2020, Diebold Nixdorf

You can protect our environment by only switching on your equipment when it is actually needed. If possible, even avoid the stand-by-mode as this wastes energy, too. Also switch your equipment off when you take a longer break or finish your work.

Please contact your competent branch or the Recycling Center Paderborn (for European countries) for information on how to return and reuse devices and disposable materials under the following mail address.

Email: info@dieboldnixdorf.com or on the internet.

3.4 Warranty

In general, damages due to

- improper or insufficient maintenance,
- improper use of the product or unauthorized modifications of the product,
- inadequate location or surroundings

will not be covered by the warranty.

For further information on the stipulation consult your contract.

All parts of the product which are subject to wear and tear are not
included in the warranty engagement. For detailed warranty arrangements please consult your contract documents.

Please order *spare parts* at the Diebold Nixdorf customer service.

3.5 Lithium Battery

⚠ WARNING

Incorrect replacement of the Lithium Battery may lead to a risk of explosion

The end user must replace the lithium battery only by identical batteries or types recommended by Diebold Nixdorf.

Do not throw Lithium Batteries into the trash can. It must be disposed of in accordance with local regulations concerning special waste.

Make sure that you insert the Battery the right way round. The plus pole must be on top.

⚠ WARNING

Always make sure that the system is switched off and the power cable is disconnected from the system before you replace the battery.

Copyright © 2020, Diebold Nixdorf

3.6 Unpacking and Checking the Delivery Unit

Unpack the parts and check to see whether the delivery matches the information on the delivery note. The delivery comprises the respective screen module. Data cables, necessary for operation, can be ordered separately. If damage has occurred during shipping or if the package contents do not match the delivery note, immediately inform your Diebold Nixdorf sales outlet.

Transport the device only in its original packaging (to protect it against impact and shock).

Copyright © 2020, Diebold Nixdorf

4 Basic settings

The Beetle A Series is configured to your order. Add-on peripheral devices, for example the magnetic swipe card reader (MSR), are delivered together with the system as an assembled unit.

4.1 Components

The Beetle A Series comes with a 15W of the following processor options with configurable memory and SSD options:

4.1.1 Processor Type

Whiskey Lake 15W Processor Options:

- Celeron 4305UE
- Core i3-8145UE
- Core i5-8365UE

4.1.2 Memory Options

1. DDR4 1866/2133/2400 MT/s SODIMM up to 16GB

4.1.3 M.2 SSD Options

1. 128GB
2. 256GB
3. 512GB
4. 1TB

Copyright © 2020, Diebold Nixdorf

5 Setting Up the Device

The Beetle A Series was developed for an in-house installation. The devices are designed to be mounted on a stand (desktop version), or on the wall (wall mount version).

Set up the Beetle A Series system where it will not be exposed to extreme environmental conditions. Protect the device from vibrations, dust, moisture, heat and strong magnetic fields.

5.1 Ergonomic Terminal Workplace

Please observe the following when setting up your terminal workplace:

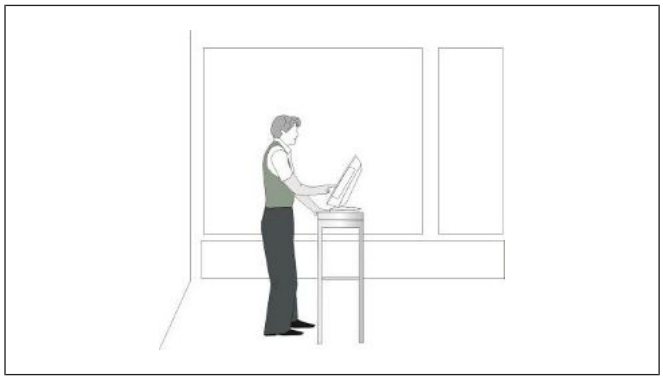

1. Avoid direct glaring and reflective glaring. Use the screen only in a controlled luminance surrounding.
2. Install the device with a viewing direction that is parallel to the windows.

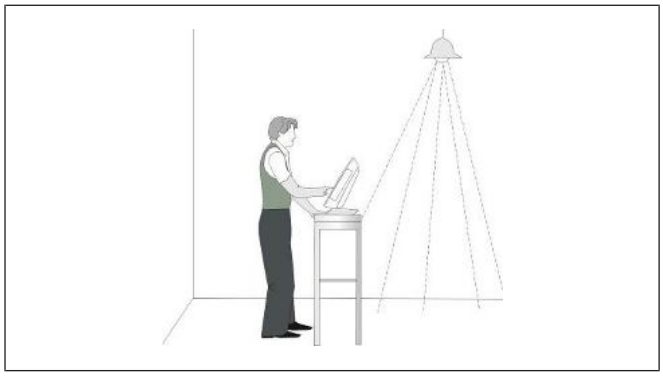

3. Avoid reflective glaring caused by electric light sources.

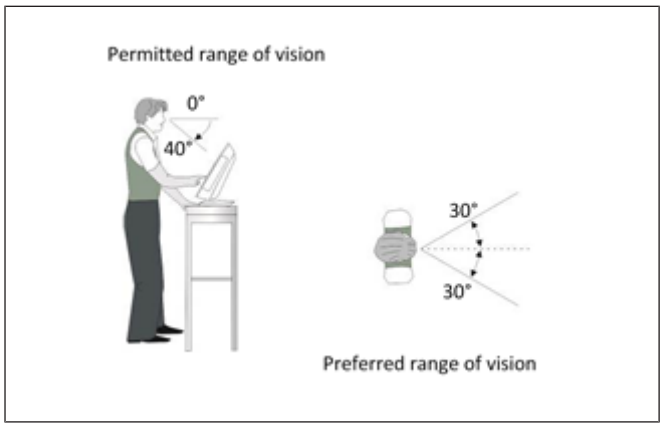

4. Position the screen within a preferred and permitted range of vision, so that you can look onto the screen from above.

6 Overview

6.1 Front View with Stand

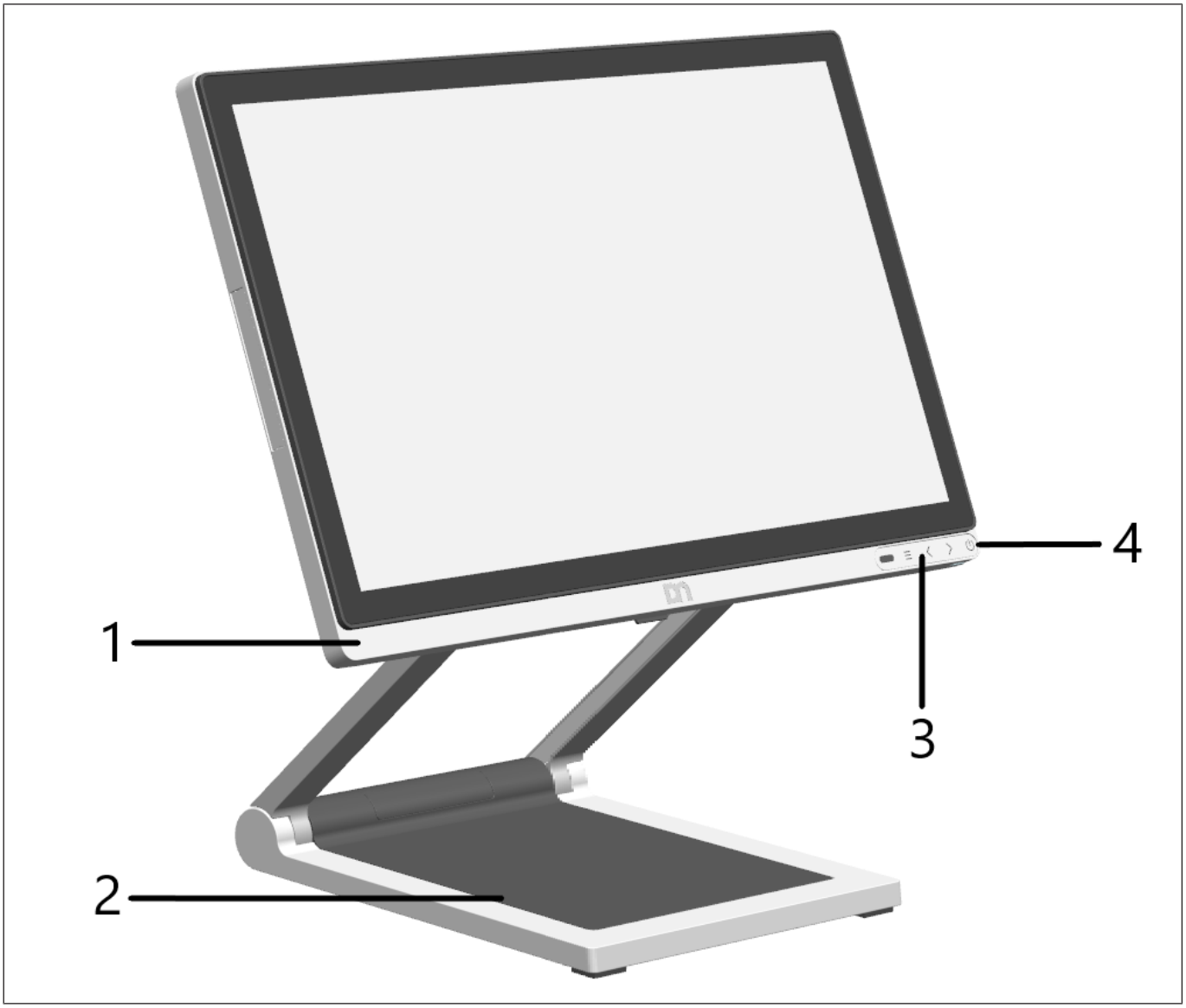

Figure 6-1: Beetle A Series (front view)

1	Beetle A Series	2	Desktop Stand
3	Touch buttons and Activities Indicator	4	Power status indicator

Copyright © 2020, Diebold Nixdorf

6.2 Back View with Stand

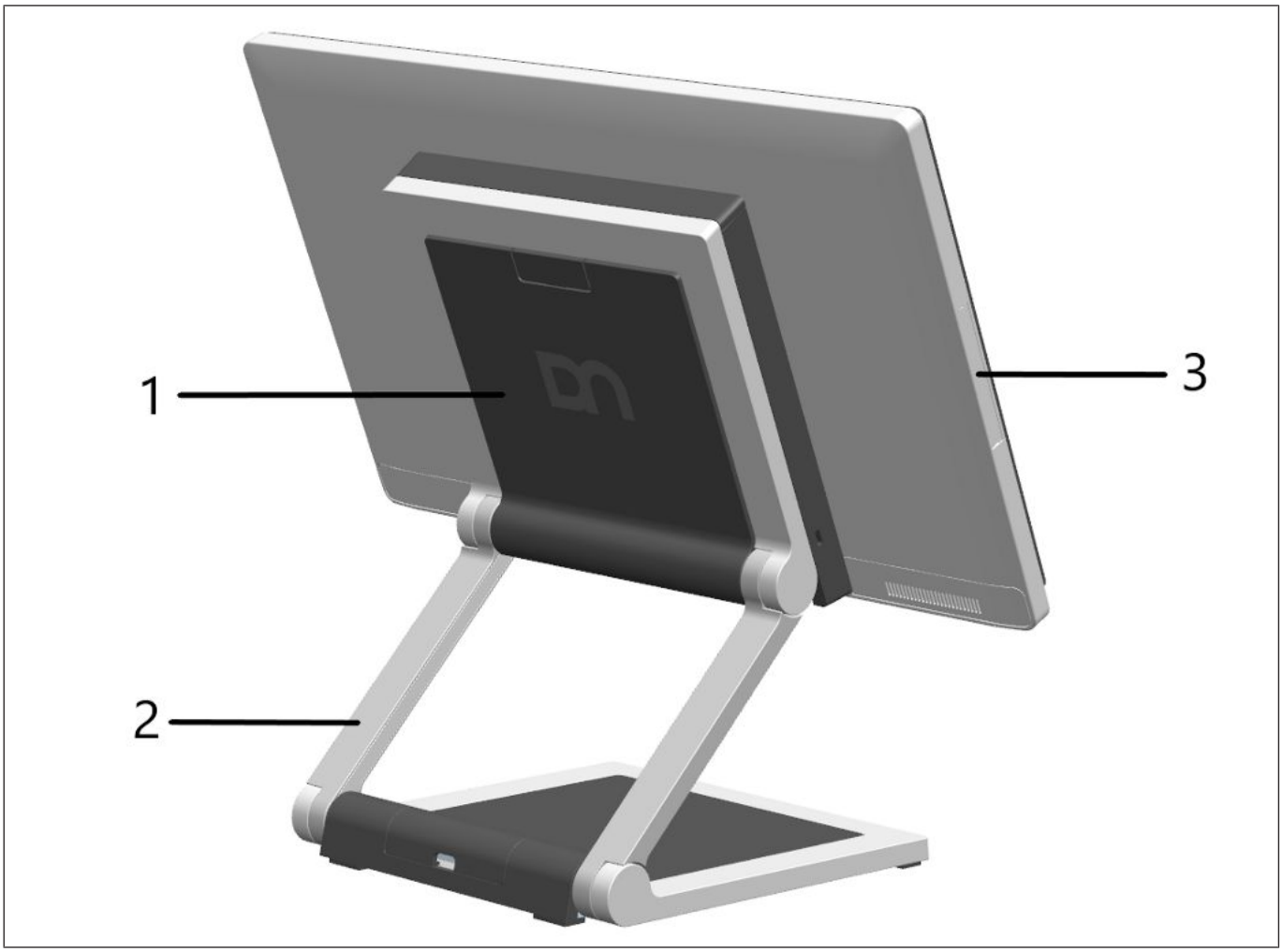

Figure 6-2: Beetle A Series (back view)

1	VESA mount cover	2	Hinge
3	Side-attach peripheral connection cover		

6.3 AC Power Adapter

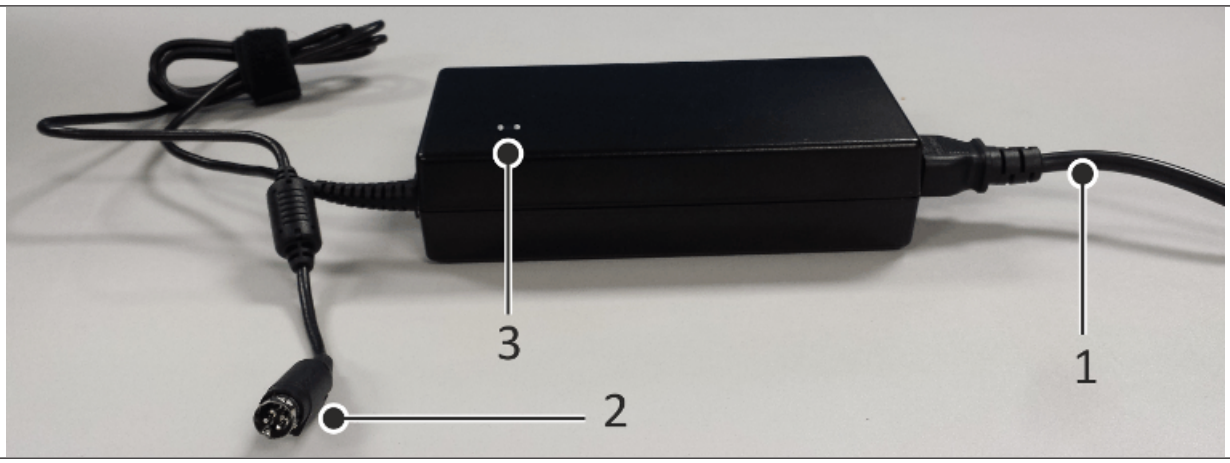

Figure 6-3: Beetle A Series AC power adapter

1	AC Power Cord	2	DC Power Out
3	Power Indicator		

The external power supply is applicable for common line voltage.
It automatically adjusts itself to the particular voltage.

Copyright © 2020, Diebold Nixdorf

6.4 Front Panel

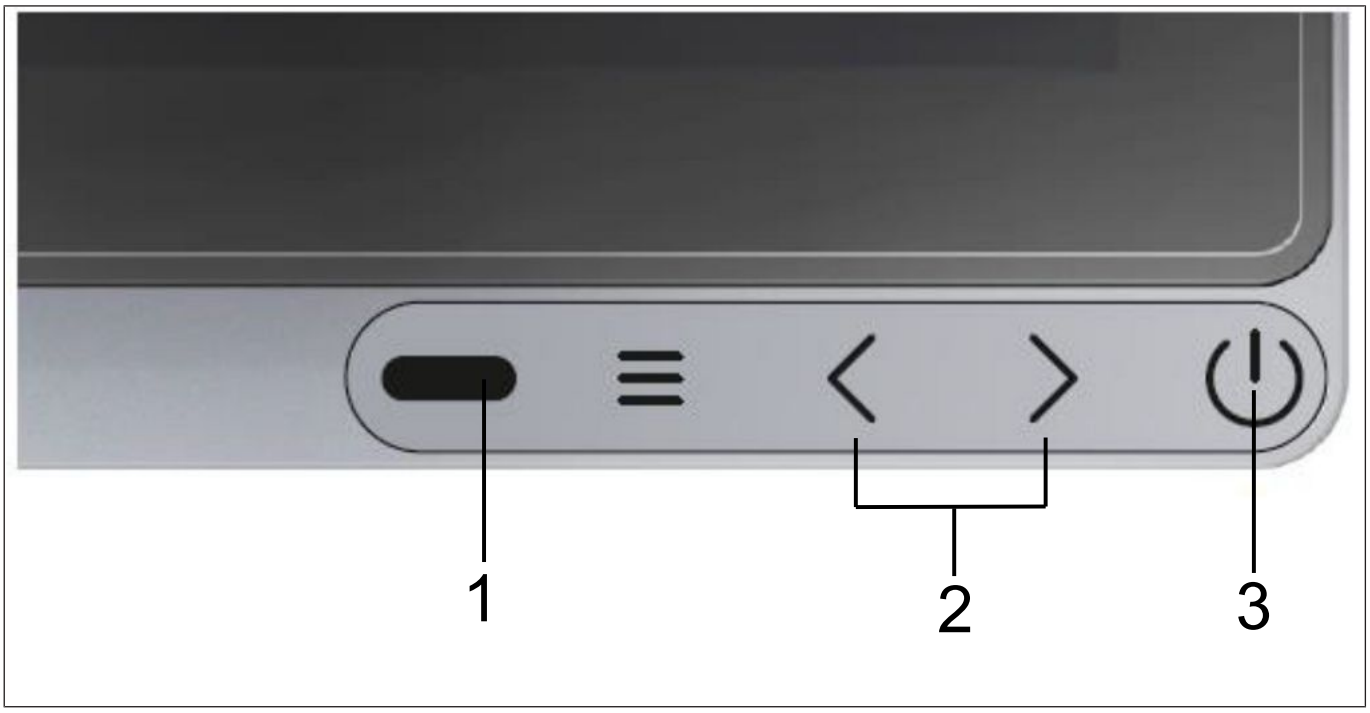

Figure 6-4: Beetle A Series front panel

1	**- Activity Indicator** • LED Off : No activity • LED Green Blinking: Activity as configured in CMOS • LED Amber: POST Code (refer to Beetle A Series Motherboard Manual **or** Beetle A Series User Manual) • LED Red Blinking: Error detected	2	**- Brightness buttons** • LED White Off : Off/AC applied • LED White On : Upon 1st touch and subsequent touch for normal brightness control
3	**- Power Status Indicator** • LED White Off : Off/AC not applied • LED White On: Active/Operating • LED White Dim: Soft-Off • LED White Blinking: Suspend to RAM/ Standby	3	**- Power Button** • Single Press : On/Off

Copyright © 2020, Diebold Nixdorf

7 Projected Capacitive Touch Screen

7.1 General Information

The use of projected-capacitive touch screens has all the benefits a normal capacitive touch screen has:

- fast processing of touch information
- high sensitivity (use with hands, conductive pencils and also with thin gloves)
- high resolution
- improved legibility and display brightness due to optimal light transmission
- Anti-glare-surface

In addition the technology of projected-capacitive touch screens is characterized by significant higher robustness and stability, because the active touch surface – different from common capacitive touch screens which were used until now - is located on the back side of the touch screen. Thus the active touch surface is not touched directly anymore and therefore will not wear off by normal use. As most of the surface contaminations do not cause an interference of the touch screen, this technology can be used in public or under severe environmental conditions.

7.2 Instructions for Using the Touch Screen

The touch screen responds to the lightest touches. The touch with only one finger is like the use of the left mouse button. The use of the touch screen with two fingers generates a zoom if the fingers are brought together or pulled apart. With a circular motion of the fingers the element on the display can be rotated. This function must be supported by either the operating system or by the application.

7.3 Cleaning Instructions

Always turn off the system before cleaning.

⚠ WARNING

The glass surface of your Touch Screen should be cleaned with a mild, abrasive free, commercially available glass cleaning product. All pH neutral materials (pH 6 to 8) are good for cleaning. Cleaners with pH values 9 to 10 are not recommended. Cleaning with water and isopropyl alcohol is possible as well. Do not use solvents containing acetic acid. Use a soft, fine-meshed cloth to clean the surface. Dampen the cloth slightly and then clean the screen.

NOTE

A wrong maintenance may cause damages to the screen, which are not covered by warranty.

8 Planning the Installation

This chapter provides you with the information you need to prepare for the installation of the system.

8.1 Dimensions

Please refer to the drawings below for dimensions of the desktop and wall mount versions. All dimensions are specified in millimetres. The views of the systems are not drawn to scale.

8.2 Desktop version

8.2.1 Desktop Stand Standard

15-inch display

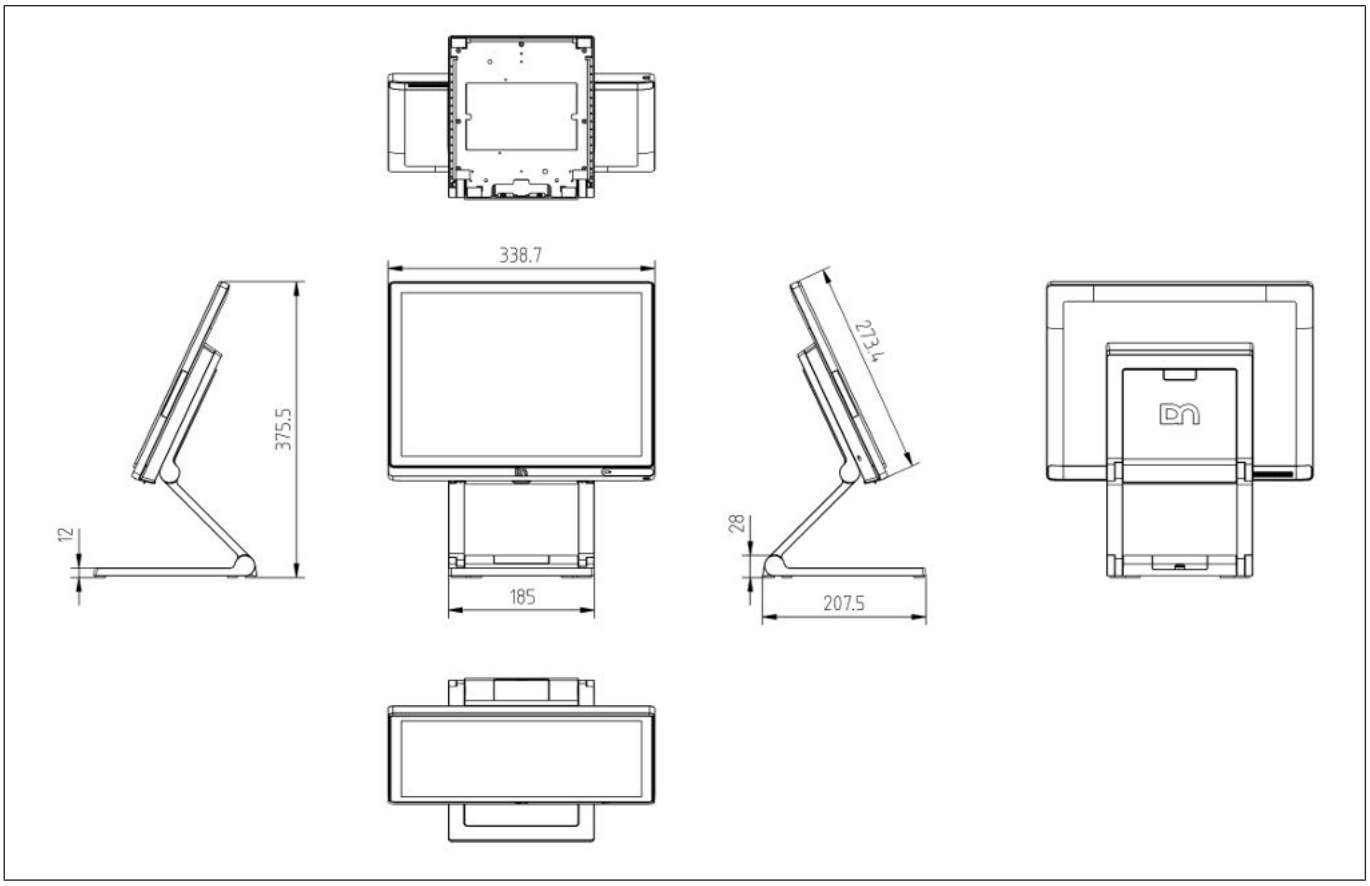

15.6-inch display

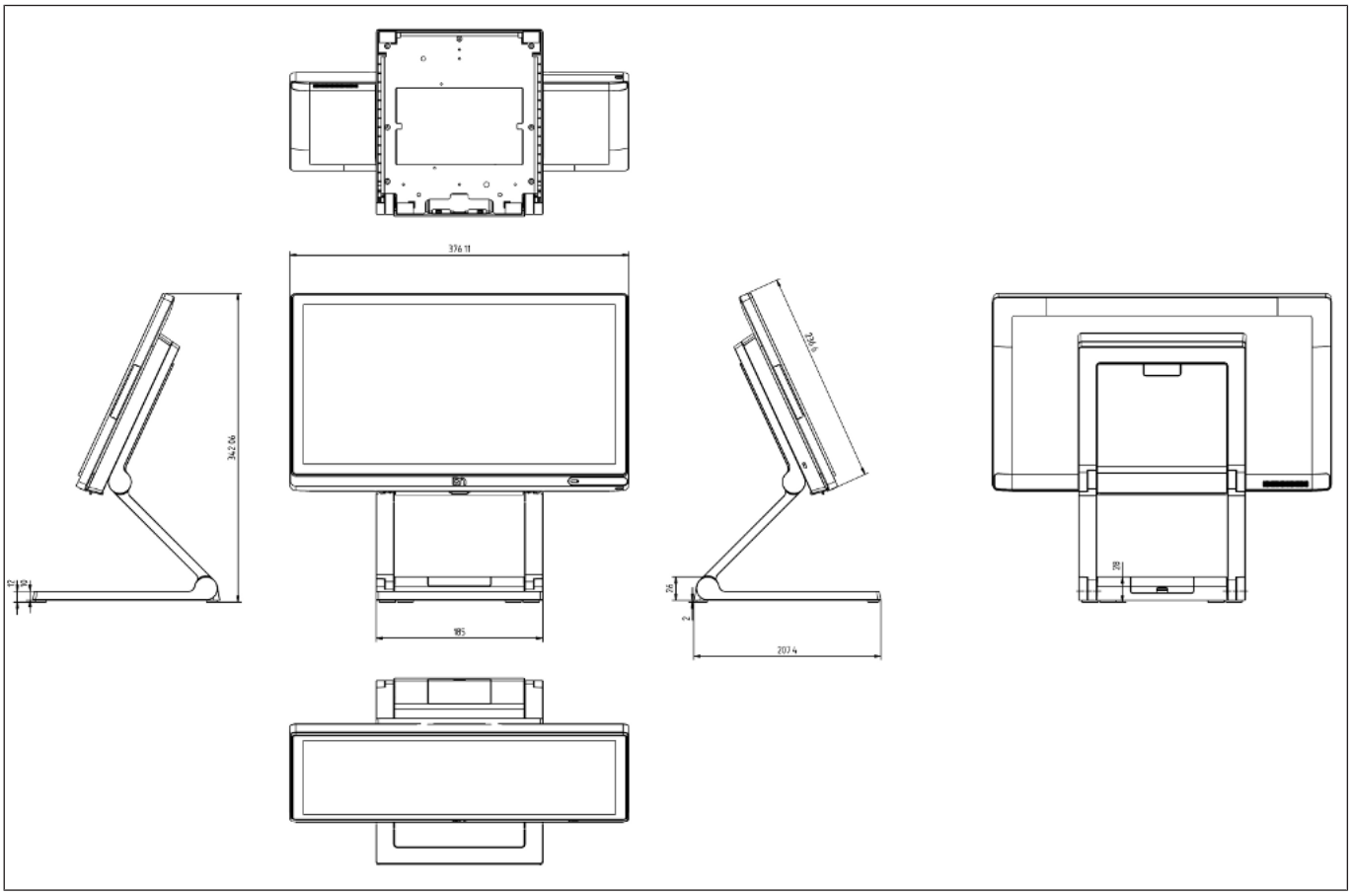

8.2.2 Wall mount version

15-inch display

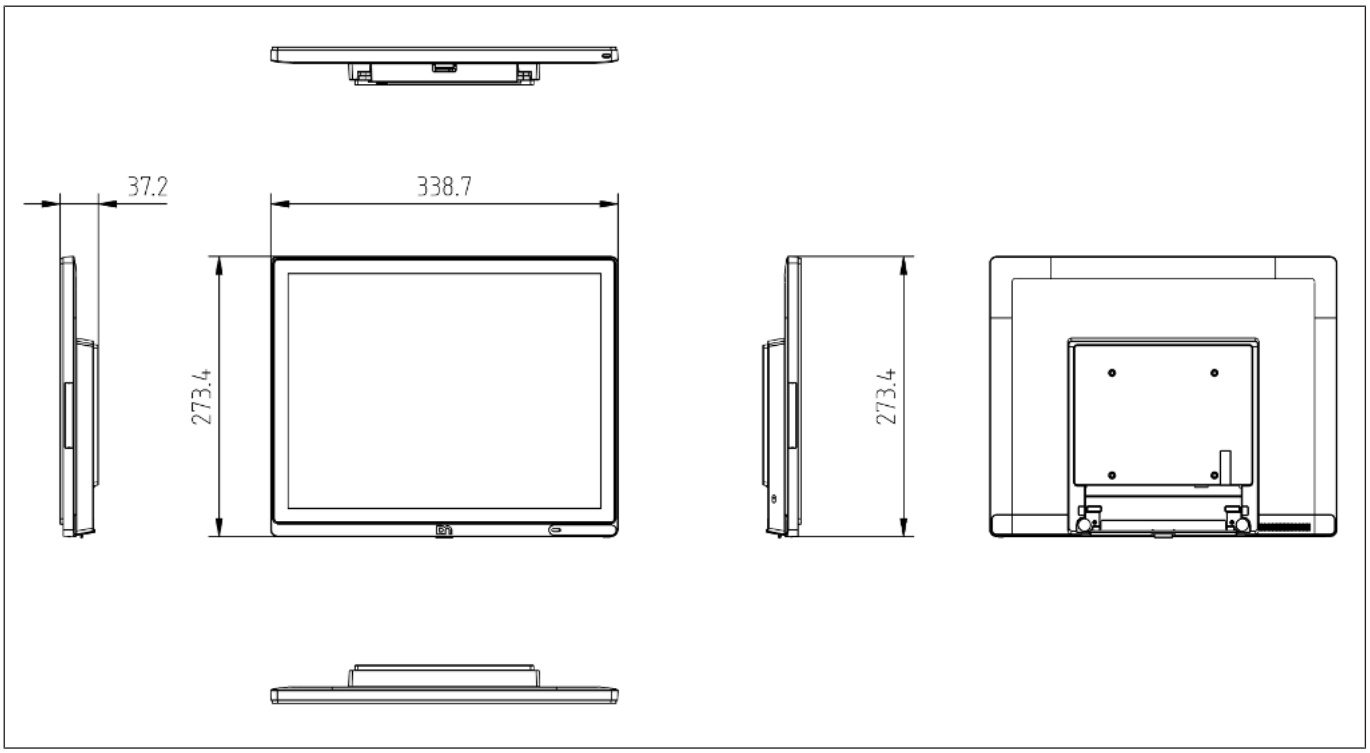

15.6-inch display

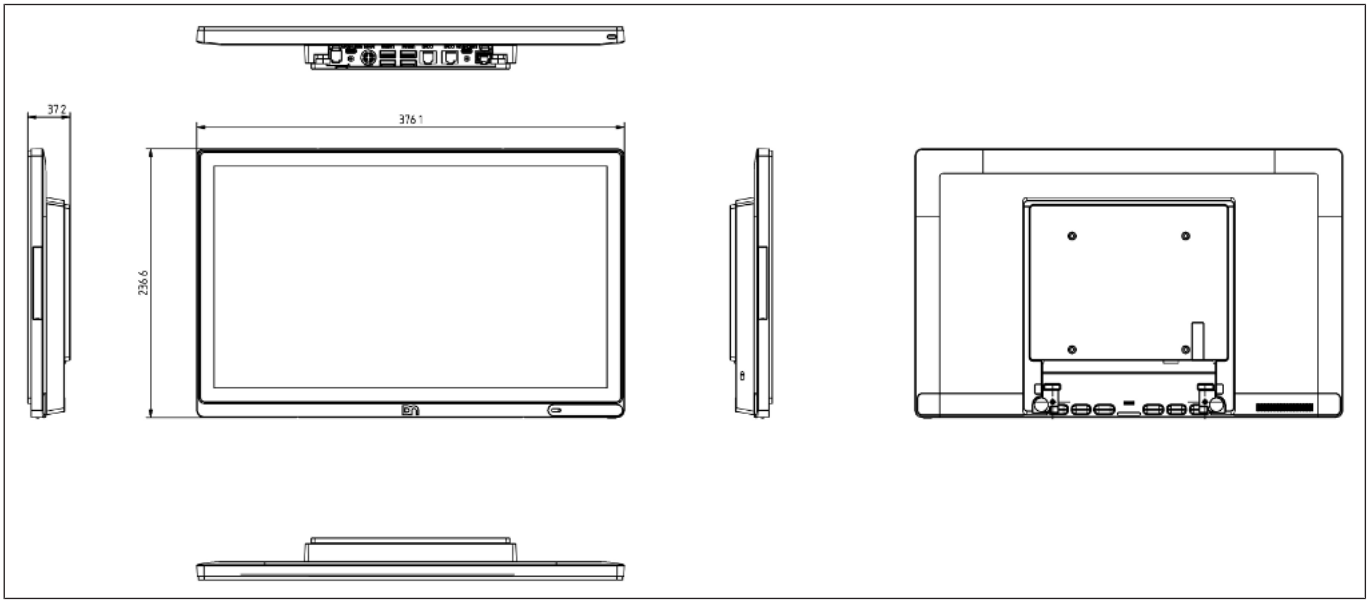

Copyright © 2020, Diebold Nixdorf

8.3 Required operation space

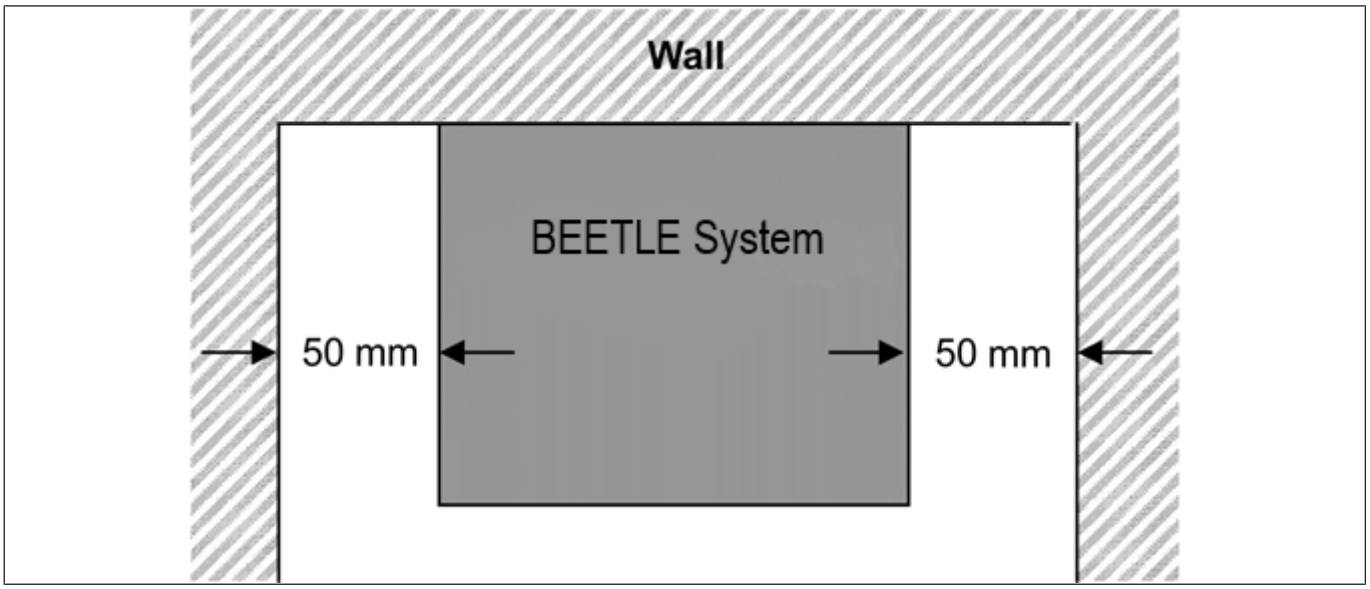

WARNING

Maintain at least 50 mm from the side of the system to ensure proper ventilation during the operation of the system.

8.4 Installation site requirements

8.4.1 Desktop version

When selecting the installation site, ensure that:

- The area is flat leveled.
- The system to be installed on a table surface and not on a floor.

8.4.2 Wall mount version

- To reduce the risk that someone may accidentally walk into the system, location such as walkway areas, hallways areas or crowded areas are not recommended.
- Make sure that all applicable building and electric codes and accessibility requirements are followed.
- The mounting area must have adequate viewing area and ventilation, as well as access to an AC power outlet.
- The mounting method must be able to support the combined weight of the system and the suspended weight of all cables attached to the system.
- The system must be mounted to a solid concrete or brick wall with flat smooth surface.

Copyright © 2020, Diebold Nixdorf

9 Installation to a stand

Take the stand and the monitor out of the packaging. For installation you will need a Torx screwdriver to loosen and tighten the Torx screws.

9.1 Installing system to the stand (standard)

9.1.1 Preparing the stand

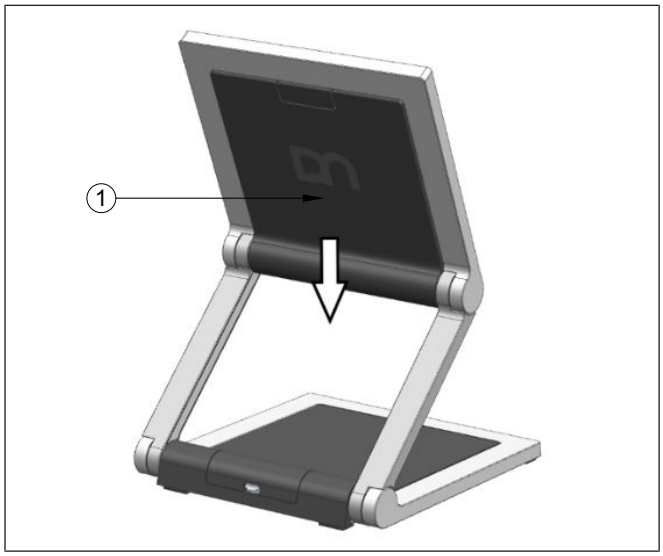

1. Remove the VESA cover by sliding it downwards (indicated by arrow).

NOTE

*Observe the safety precaution mentioned on the next page when you remove the back cover of stand.

WARNING

To avoid damage to the back cover of the stand, be careful of how you would remove it.

9.1.2 Preparing the system

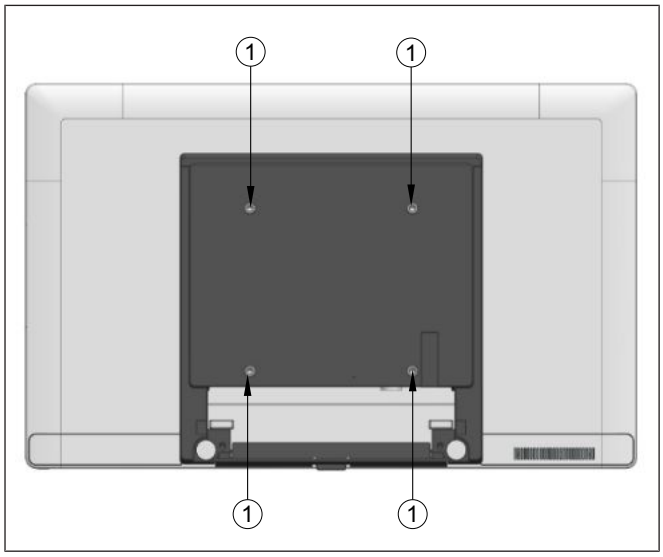

1. Place a piece of protection sheet on a flat surface e.g. a table.
2. Lay the display face down on the protection sheet.
3. Remove the 4 screws (1) that come with the Beetle A Series.

9.1.3 Installing system to the stand

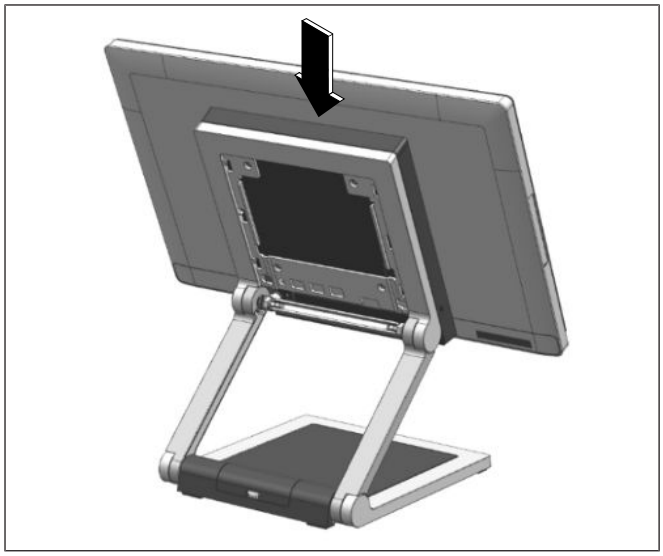

1. Fit the system on the stand while holding it in place.

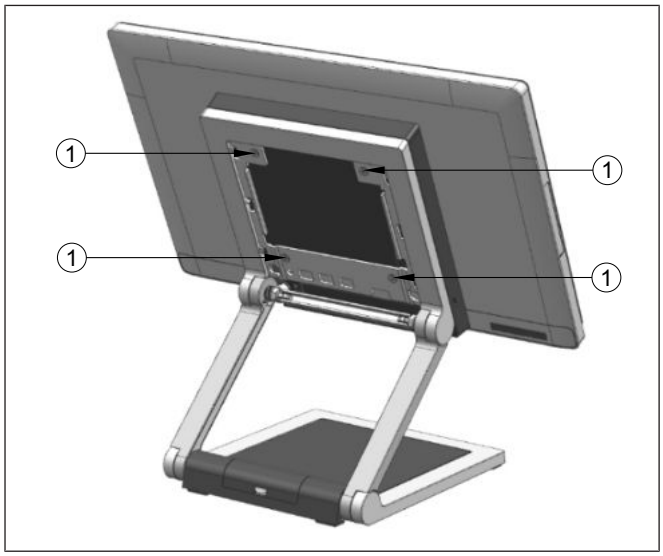

2. Tighten the 4 M4x6 countersunk screws (1) (that came with the stand) to secure the system to the stand.

Copyright © 2020, Diebold Nixdorf

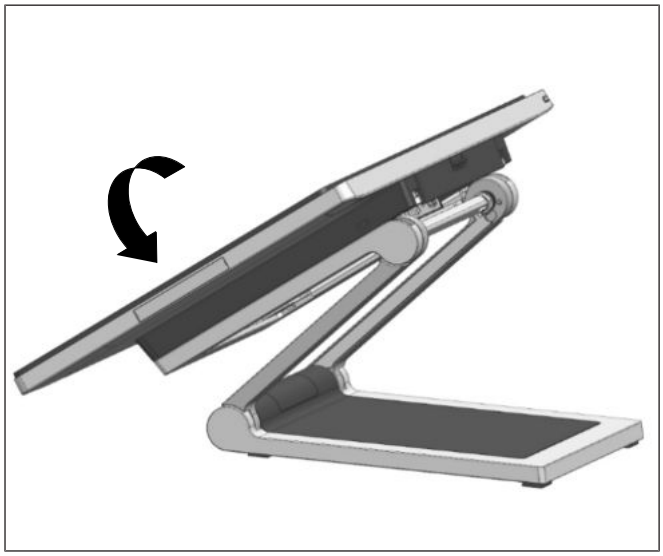

3. Tilt the system back to access the connector panel at the bottom of the system display.

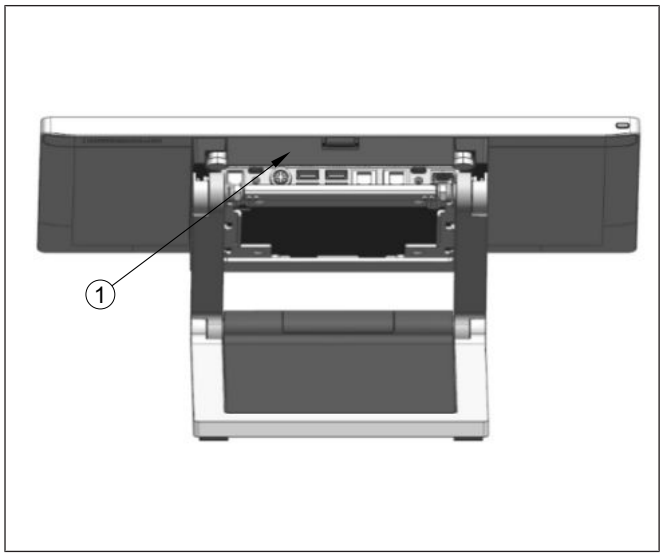

4. Remove the cable cover (1).

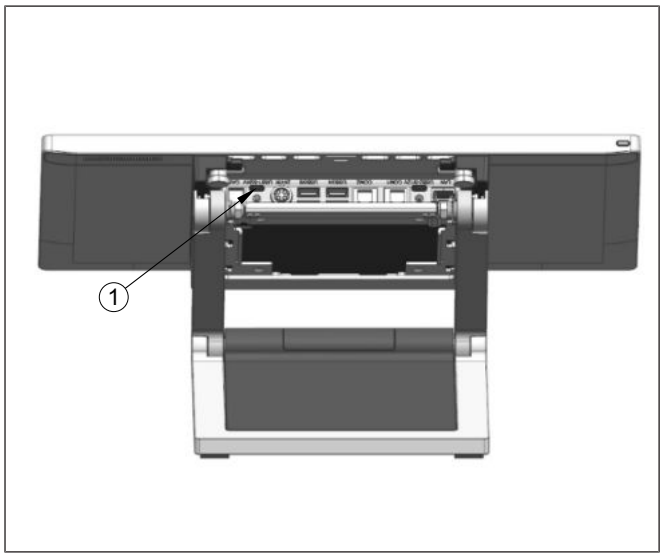

5. Plug the USB-C cable into the port indicated (1).
6. Replace the cable cover.

Copyright © 2020, Diebold Nixdorf

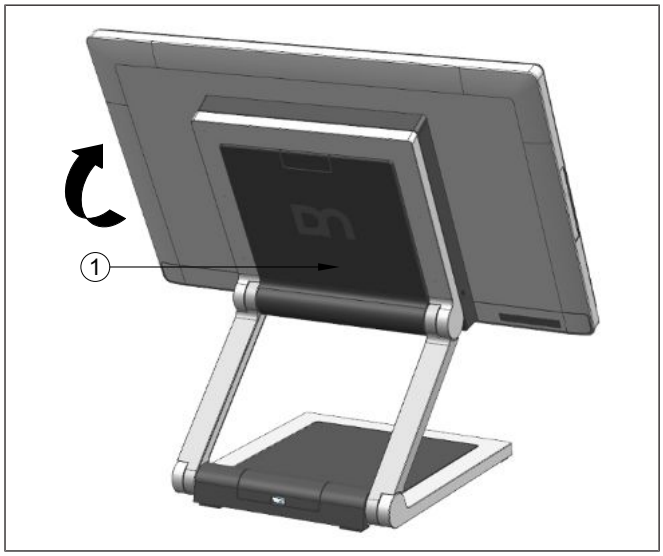

7. Tilt the system back to its operating position.
8. Replace the VESA cover (1) by pushing it upwards.

NOTE

When uninstalling the stand, always make sure that all cables are disconnected.

9.2 Installing system to the stand (with I/O hub)

9.2.1 Preparing the stand

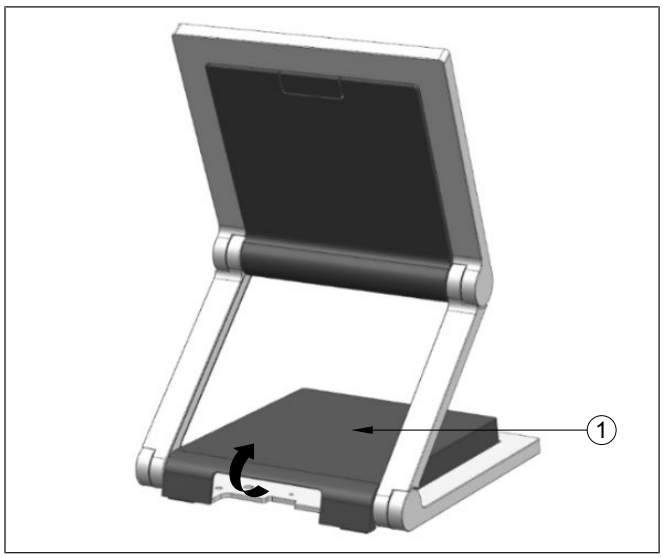

1. Remove the I/O Hub cover by pulling it up from the back.

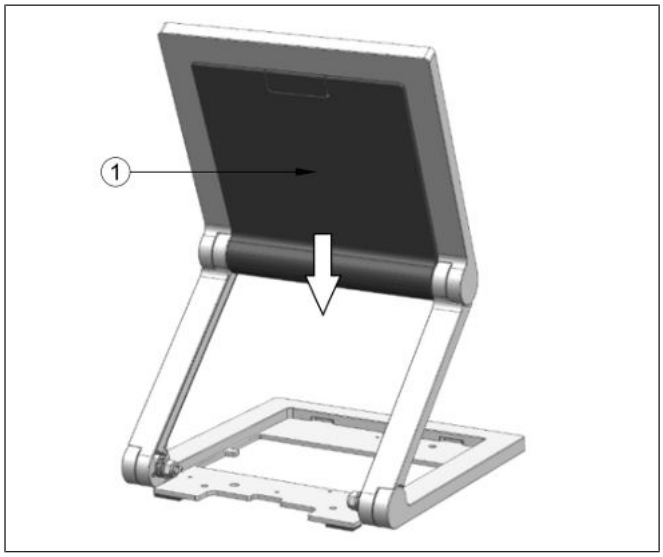

2. Remove the VESA cover by sliding it downwards (indicated by arrow).

NOTE

*Observe the safety precaution mentioned on the next page when you remove the back cover of stand.

WARNING

To avoid damage to the back cover of the stand, be careful of how you would remove it.

Copyright © 2020, Diebold Nixdorf

9.2.2 Preparing the system

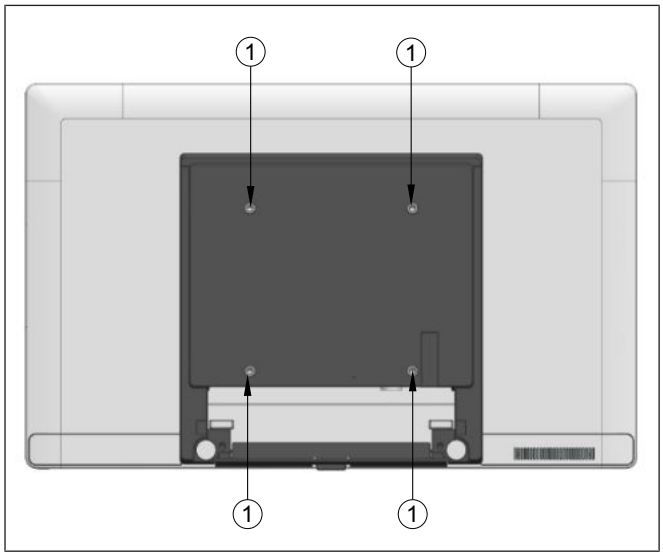

1. Place a piece of protection sheet on a flat surface e.g. a table.
2. Lay the display face down on the protection sheet.
3. Remove the 4 screws (1) that come with the Beetle A Series.

9.2.3 Installing system to the stand

NOTE

When installing the system to a stand with I/O Hub, install the I/O Hub before installing the system to ensure stability of the structure.

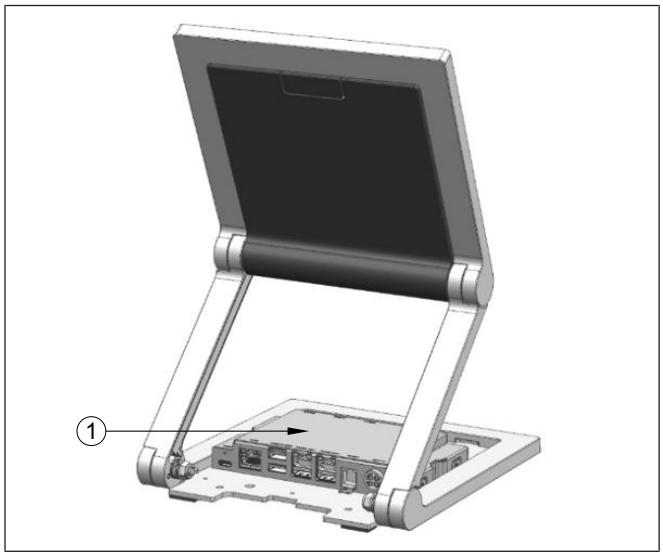

1. Fit the I/O Hub (1) into the base of the stand as illustrated.

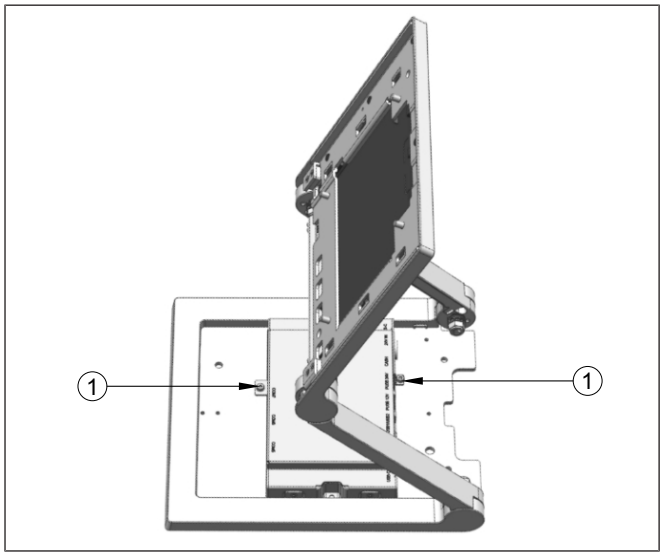

2. Secure the I/O Hub with the 2 M3x4 screws provided at the positions indicated (1).

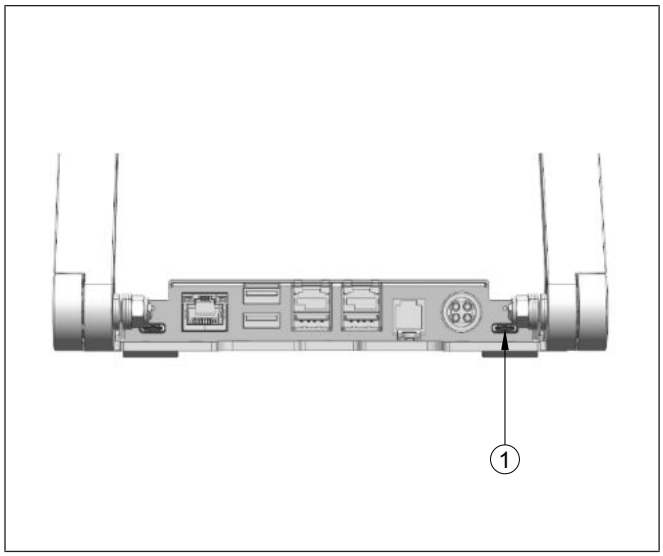

3. Connect the USB-C cable to the port indicated (1).

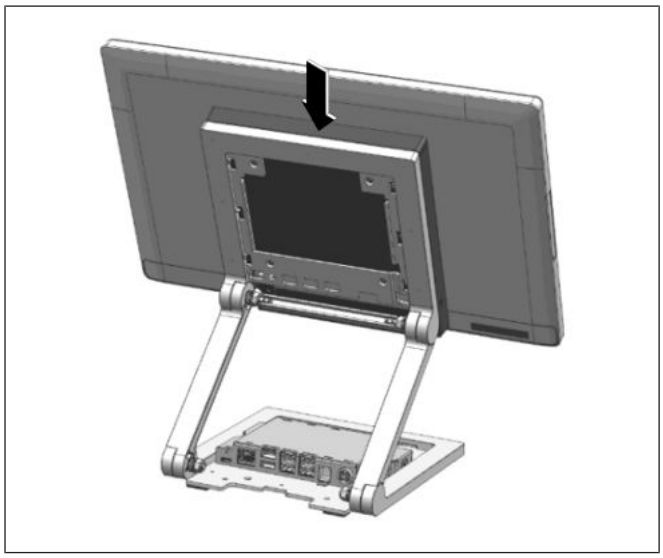

4. Then, fit the system on the stand while holding it in place.

Copyright © 2020, Diebold Nixdorf

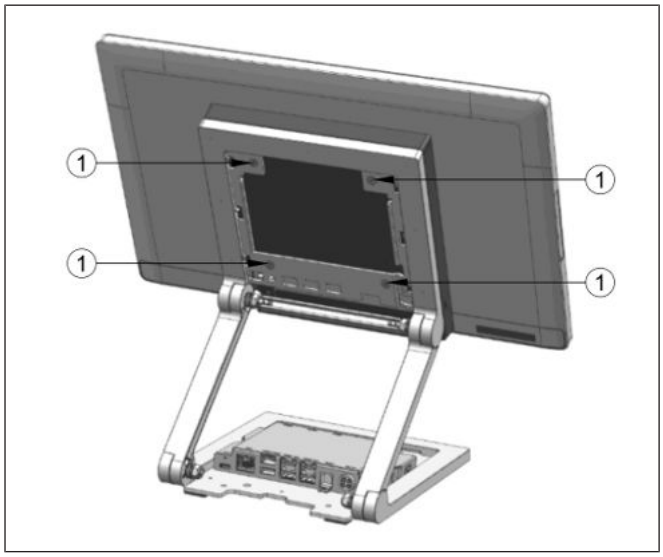

5. Tighten the 4 M4x6 countersunk screws (1) (that came with the stand) to secure the system to the stand.

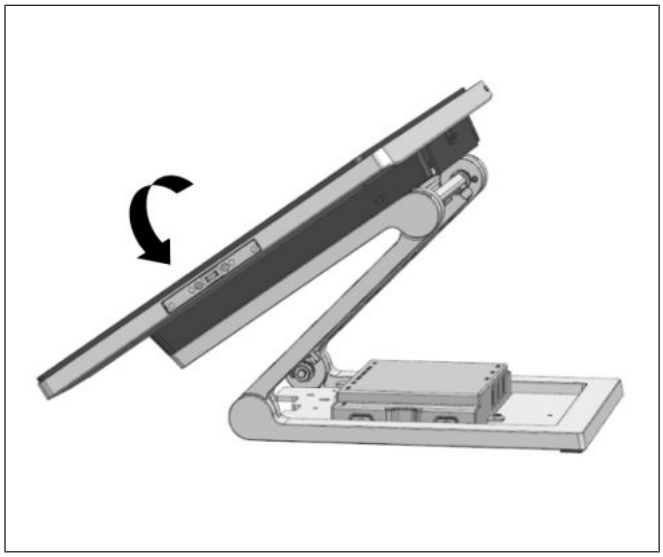

6. Tilt the system back to access the connector panel at the bottom of the system display.

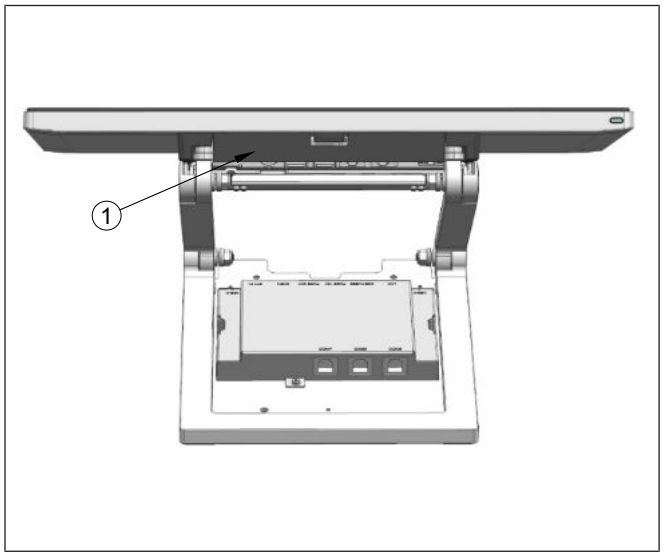

7. Remove the cable cover (1).

Copyright © 2020, Diebold Nixdorf

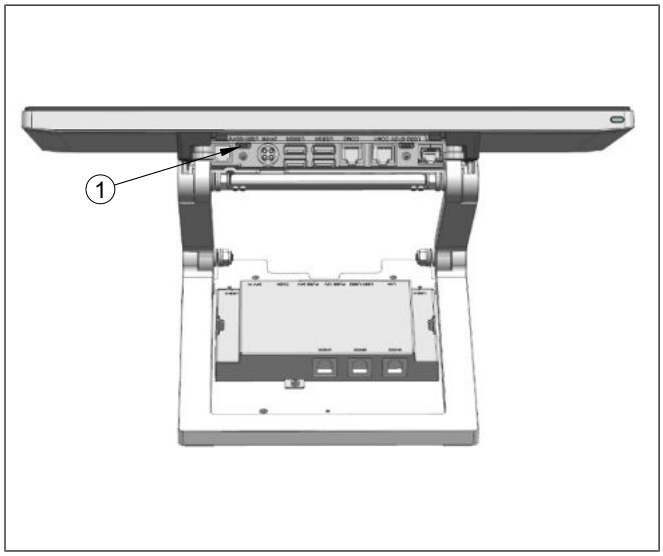

8. Plug the USB-C cable into the port indicated (1).
9. Replace the cable cover.

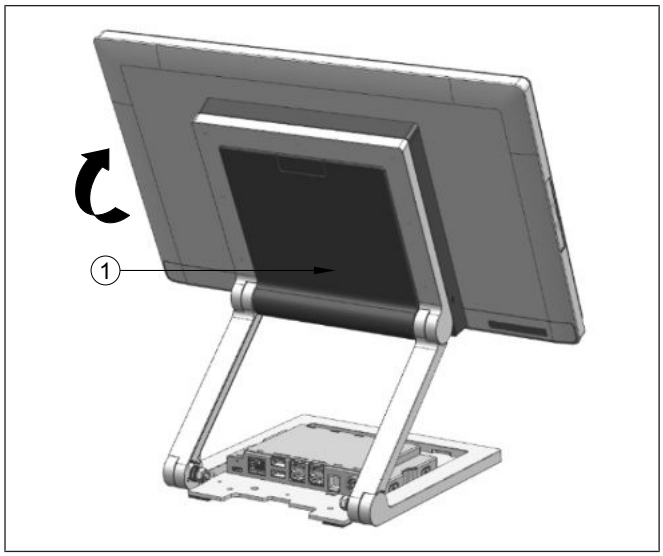

10. Tilt the system back to its operating position
11. Replace the VESA cover (1) by pushing it upwards.

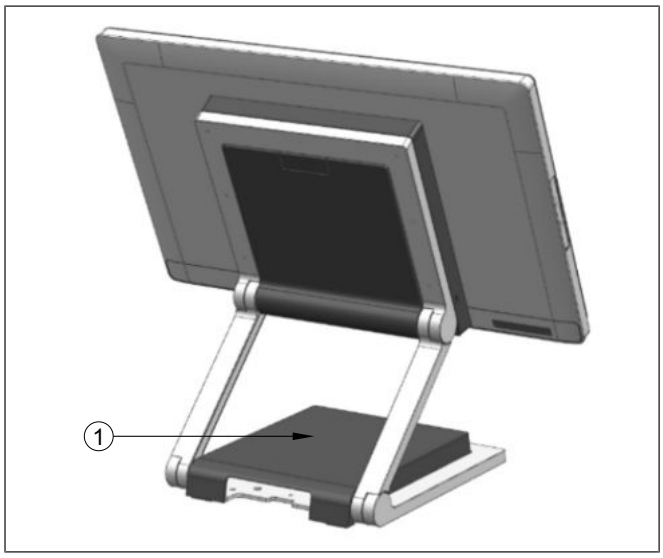

12. Replace the cover of the I/O Hub (1) previously removed.

NOTE

When uninstalling the stand, always make sure that all cables are disconnected.

Copyright © 2020, Diebold Nixdorf

9.3 Installing system to the stand (with cable covers)

9.3.1 Preparing the stand

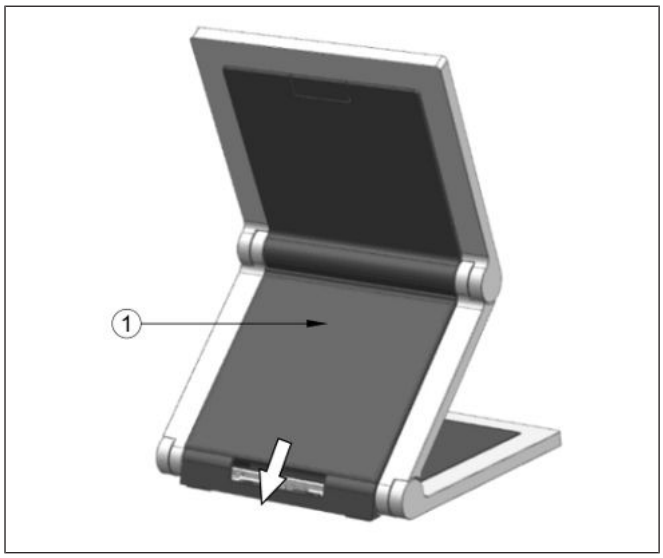

1. Remove the back cable cover (1) by sliding it downwards (indicated by arrow).

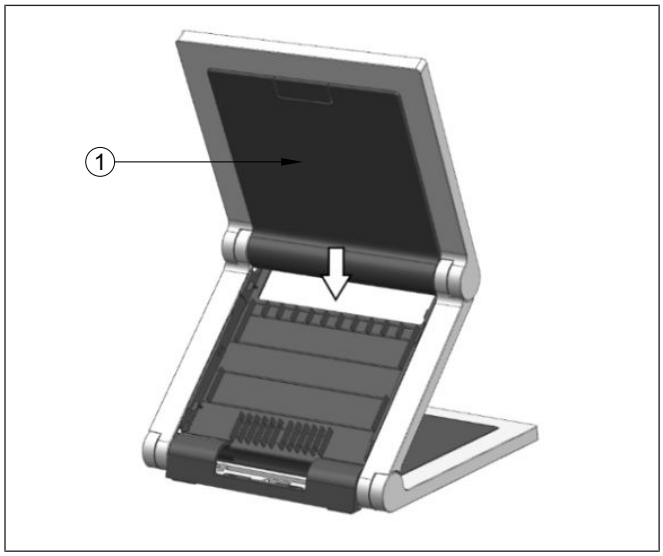

From the stand:

2. Remove the VESA cover by sliding it downwards (indicated by arrow).

NOTE

*Observe the safety precaution mentioned on the next page when you remove the back cover of stand.

WARNING

To avoid damage to the back cover of the stand, be careful of how you would remove it.

9.3.2 Preparing the system

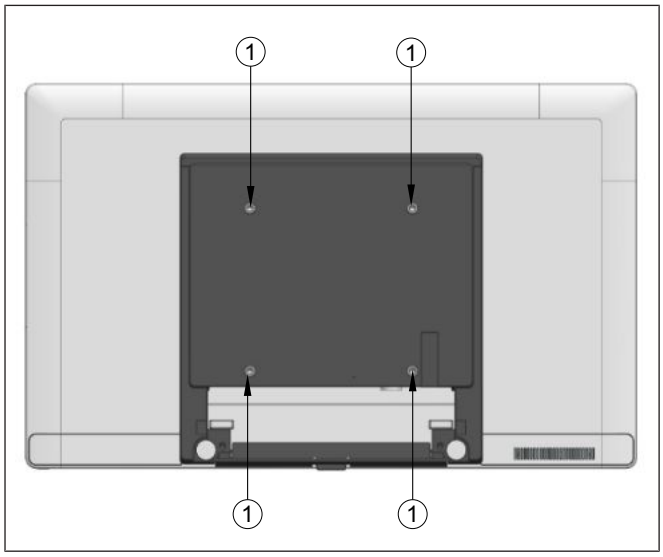

1. Place a piece of protection sheet on a flat surface e.g. a table.
2. Lay the display face down on the protection sheet.
3. Remove the 4 screws (1) that come with the Beetle A Series.

9.3.3 Installing system to the stand

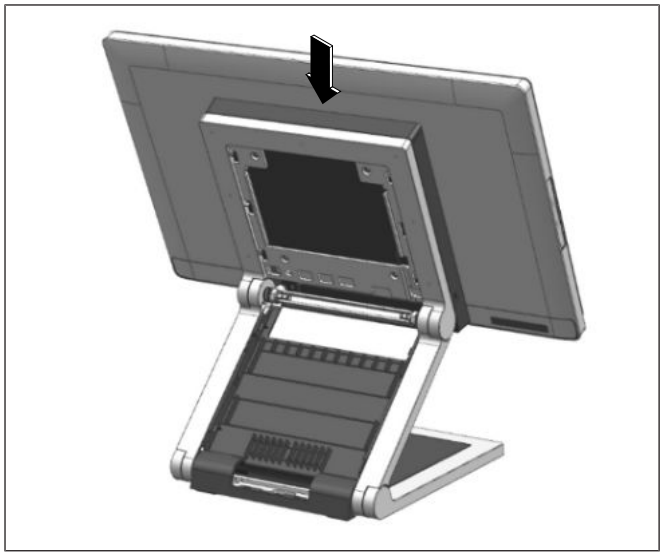

1. Fit the system on the stand while holding it in place.

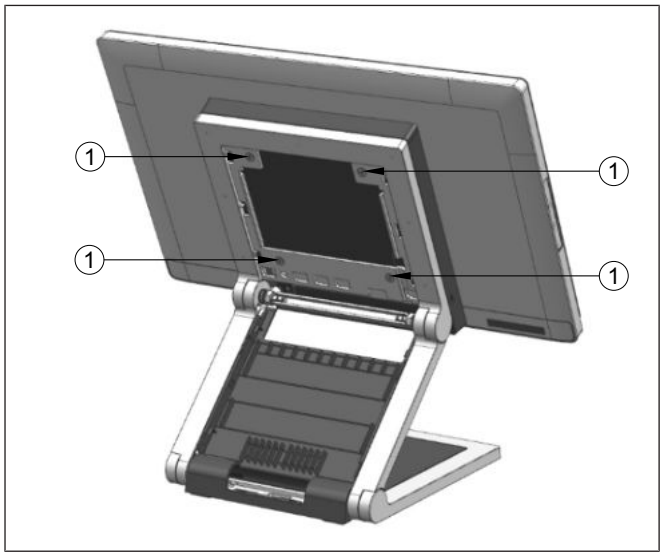

2. Tighten the 4 M4x6 countersunk screws (1) (that came with the stand) to secure the system to the stand.

Copyright © 2020, Diebold Nixdorf

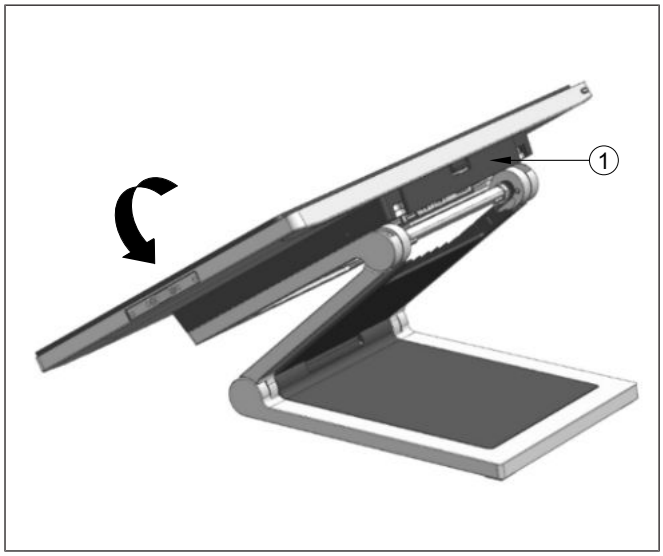

3. Tilt the system back to access the connector panel at the bottom of the system display.
4. Remove the cable cover (1) at the bottom of the system display.

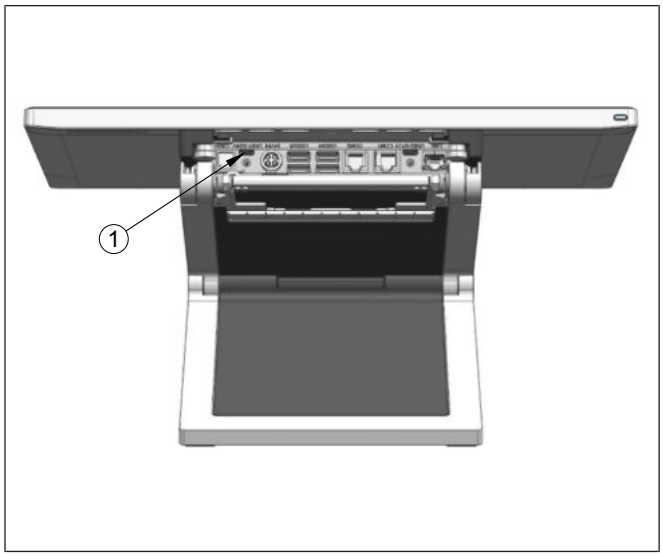

5. Plug the USB-C cable into the port indicated (1).

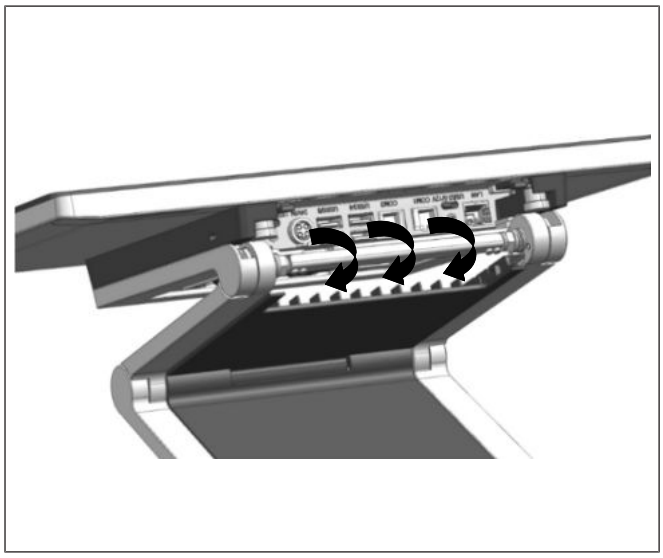

6. Route the cables from the connector panel in the path as illustrated (arrows).
7. Replace the cable cover previously removed.

Copyright © 2020, Diebold Nixdorf

8. Tilt the system back to its operating position

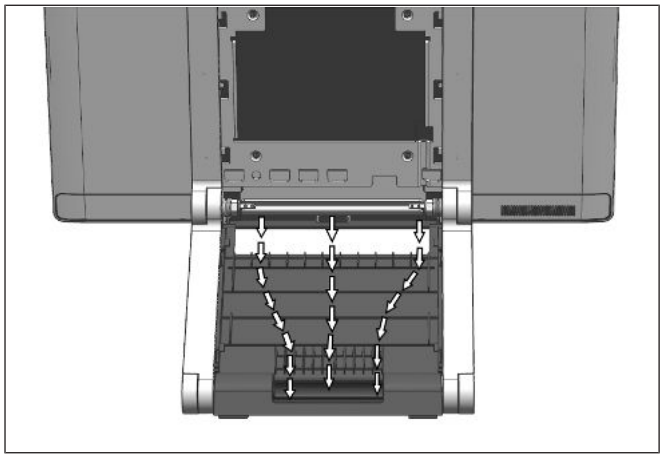

9. Tug the cables neatly into their respective cable channels as illustrated (arrows).

NOTE

The arrow paths are for illustration purpose only and are not meant to be exhaustive.

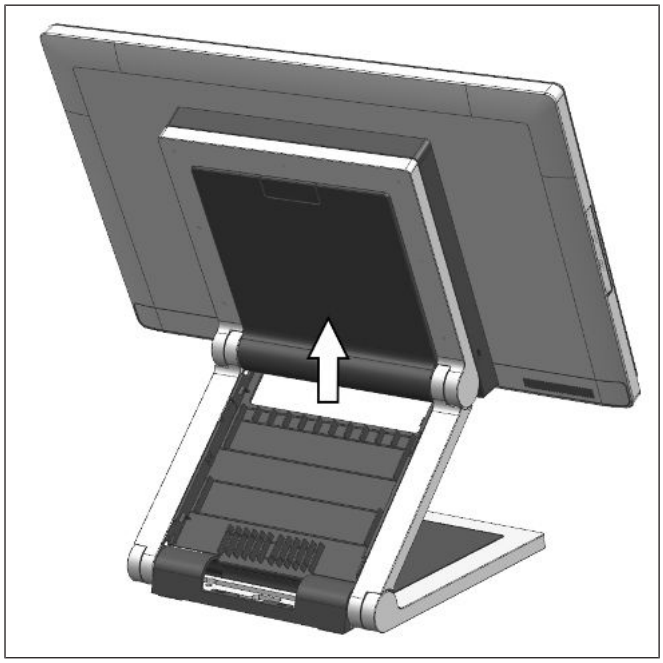

10. Replace the VESA cover by sliding it upwards.

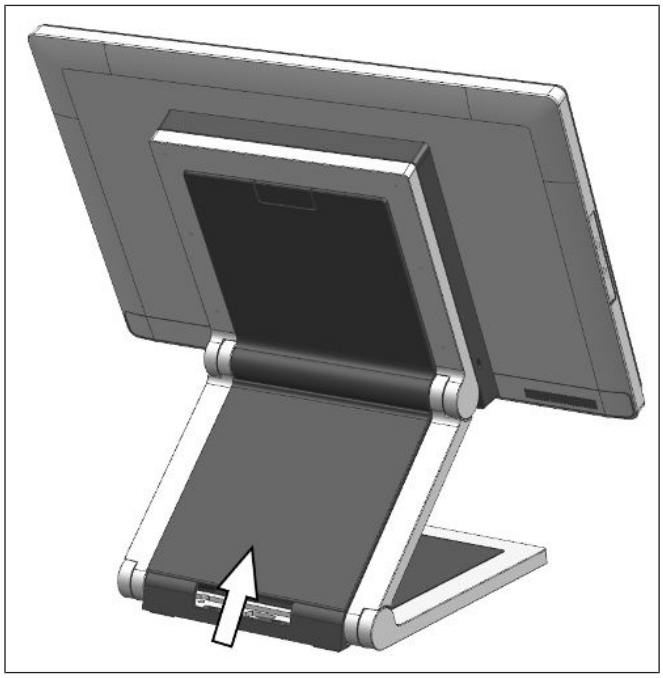

11. Align the back cable cover (1) with the front cable cover (2).
12. Replace back cable cover (1) by sliding it upwards.

Copyright © 2020, Diebold Nixdorf

10 Connector Panel

The following sockets are located under the cable connection cover of the display:

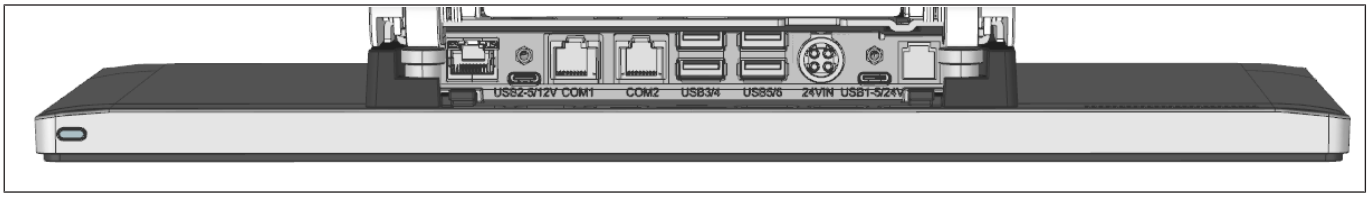

	Port label	Description of port
1	LAN	RJ45 LAN port
2	USB2	USB 3.0 (Type C with DP and PD 5/12V)
3	COM1	RJ50 powered COM port (5V/12V)
4	COM2	RJ50 powered COM port (5V/12V)
5	USB3/4	USB 2.0 (Type A)
6	USB5/6	USB 3.0 (Type A)
7	24V IN	Connection to power (24V DC Input)
8	USB1	USB 3.0 (Type C with DP and PD 5/24V) Power source/sink function
9	CASH	RJ12 (Cash drawer)

WARNING

Make sure that all additional devices have a CE certificate.

NOTE

Maximum 70W load is allowed for any combination of the interface connectors.

Copyright © 2020, Diebold Nixdorf

10.1 Connecting cables

All devices belonging to the module Beetle A Series that have a separate power cable must be connected to the same electric circuit.

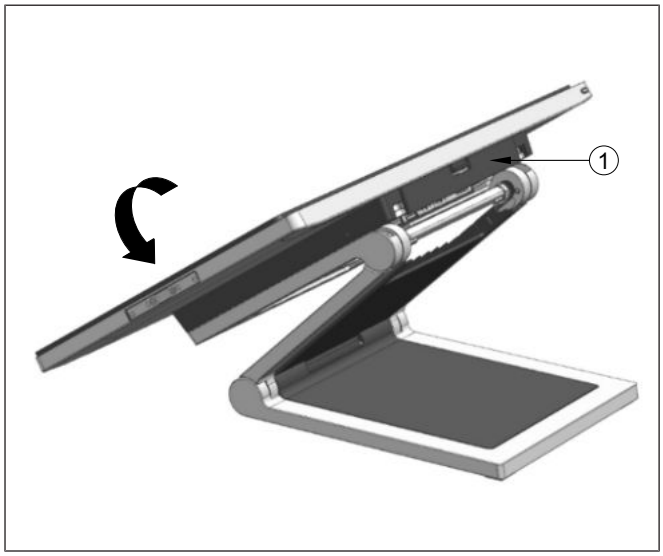

1. Tilt the display to the back, and remove the cable connection cover (1) to uncover the connector panel.

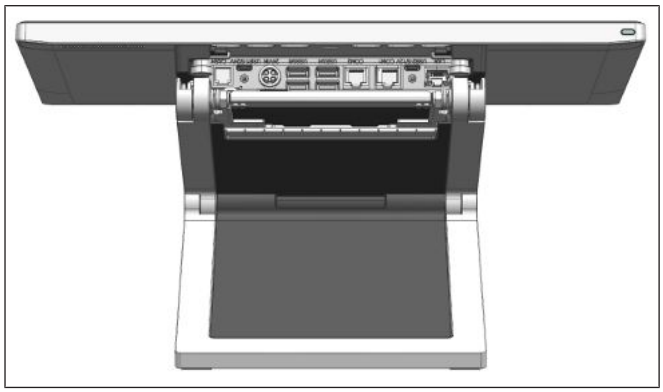

2. Connect the cables to their assigned ports.
3. Re-attach the cable connection cover.

10.2 Disconnecting cables

Never unplug a cable by pulling on the cable; always take direct hold of the plug itself. Follow the procedure below when disconnecting cables:

- Turn off all power and equipment switches.
- Remove the cable cover.
- Unplug all power plugs from the grounded-contact power sockets.
- Unplug all data communication cables from the sockets of the data networks.
- Unplug all cables from the devices.

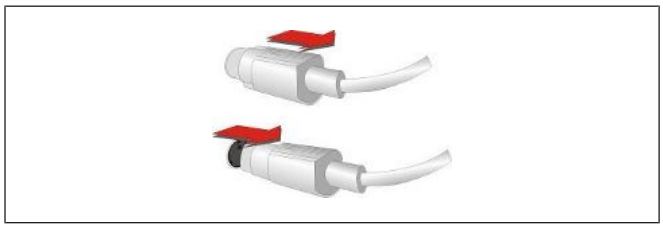

Figure 10-1: MINI-DIN plugs

1. With MINI-DIN plugs (Diebold Nixdorf keyboards), the plug remains inserted until released.
2. Pull the plastic covering from the connecting socket with your thumb. The lock is released. The metal of the plug is visible.

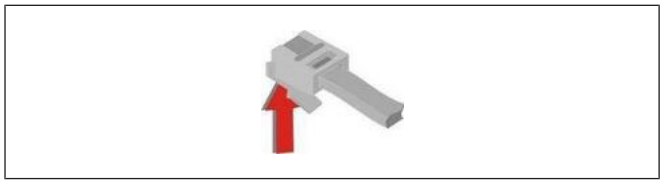

Figure 10-2: RJ12 plug

3. To release a RJ12 plug push the latch under the plug to the top.

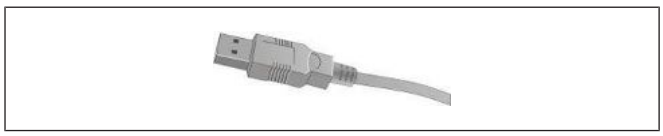

Figure 10-3: USB-A connector

4. Loosen the USB-A- connector by pulling at the housing of the connector.

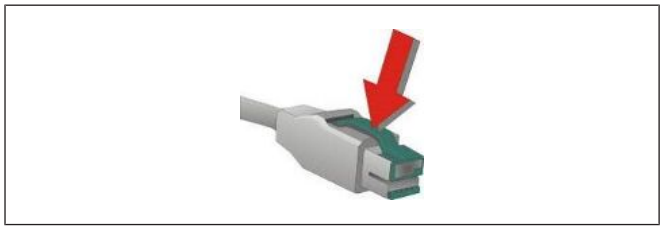

Figure 10-4: P-USB connector

5. The P- USB connector is disengaged by pressing the spring that is marked by an arrow.

Copyright © 2020, Diebold Nixdorf

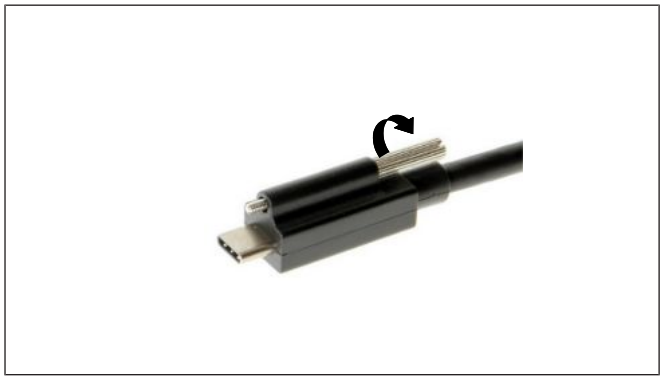

Figure 10-5: USB-C connector

6. Manually loosen the knurled screw of the USB-C connector.

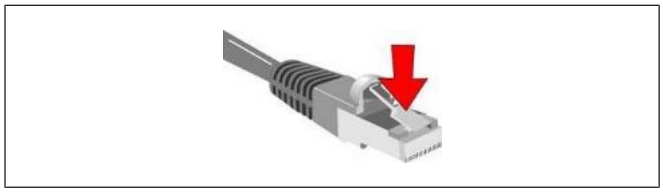

Figure 10-6: RJ45-RJ50 plug

7. To release a RJ45/RJ50 plug push down the latch (see arrow).

Copyright © 2020, Diebold Nixdorf

11 Storage Media

Mass storage in the Beetle A Series is a double-slot Socket 3 (M-Key) for Type 2280 M.2 SSD card.

- Solid State Disk (SSD)

A solid state disk is a data storage drive that uses memory elements in place of a rotating disk to store data. The SSD easily substitutes the hard disk and emulates a hard disk drive interface. Most SSDs are flash memory-based.

11.1 Replacement of Solid State Disk

1. First, ensure that the device is switched off and the power connector is disconnected.

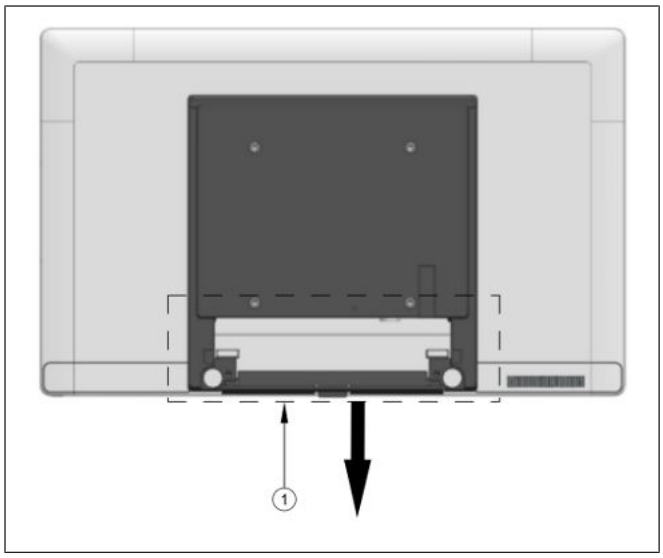

Figure 11-1: Removing the cable connection cover

2. Remove the display from the stand, and lay it on a flat surface.
3. Remove the cable connection cover at position (1) by pulling it downwards (see arrow) to uncover the connector panel.
4. Detach all connectors from the connector panel.

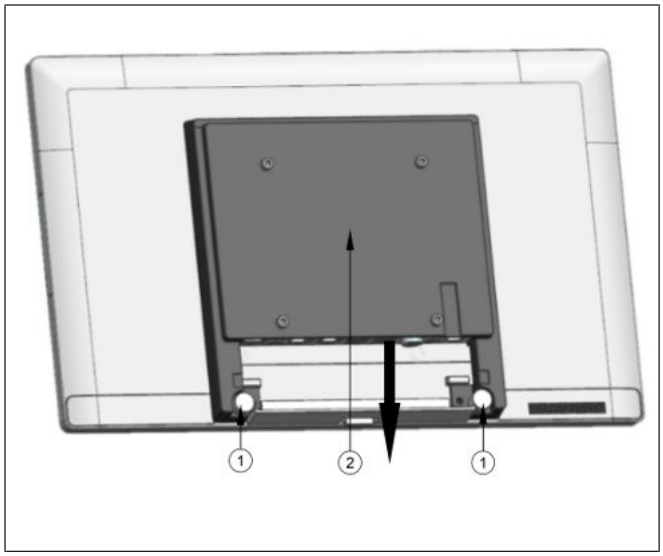

Figure 11-2: Releasing the back cover

5. Lift up and turn the 2 knobs (1) counter-clockwise to release the back cover (2) from the display by pulling it downwards.

⚠ CAUTION

Risk of damage to cables

Presence of cables connecting the controller module to the display module.

Due to limited length of the connecting cables, care **must** be taken when removing the controller module from the display module to avoid damaging these cables.

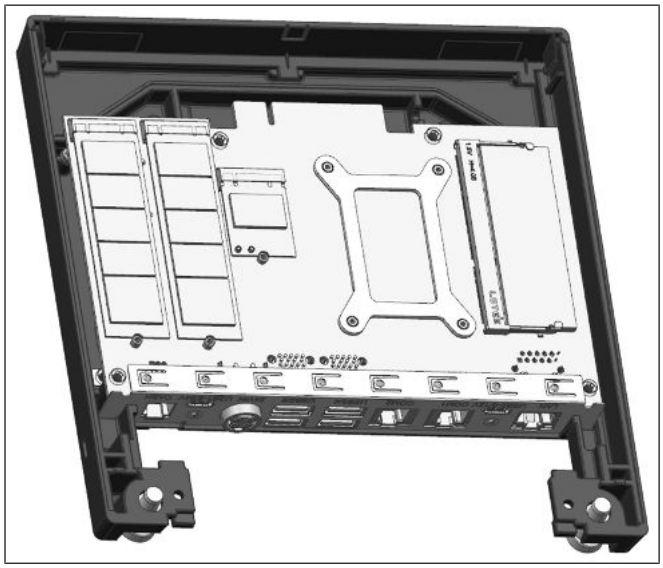

Figure 11-3: Exposing the components

6. Turn the back cover over to expose the components as shown.

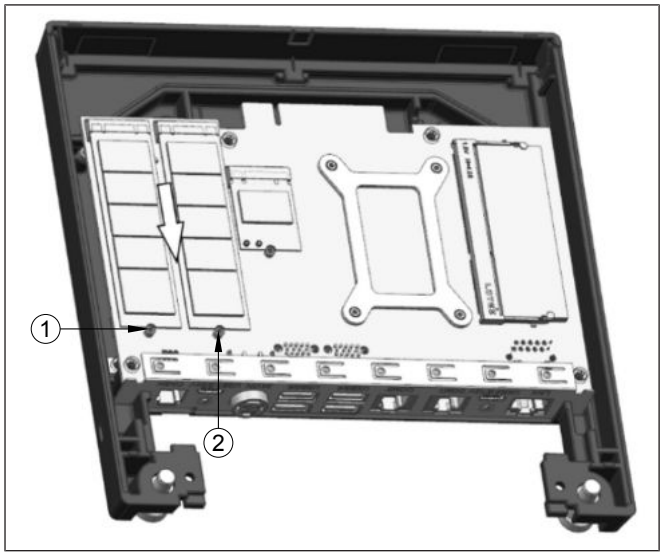

Figure 11-4: Removing the SSD

7. Remove the screws (1) and (2) on the SSD.

NOTE

Screw (2) is attached to an **optional** second SSD, which may or may not be present depending on your system configuration.

8. The SSD can now be removed from their slots by pulling downwards in the direction indicated (arrow).

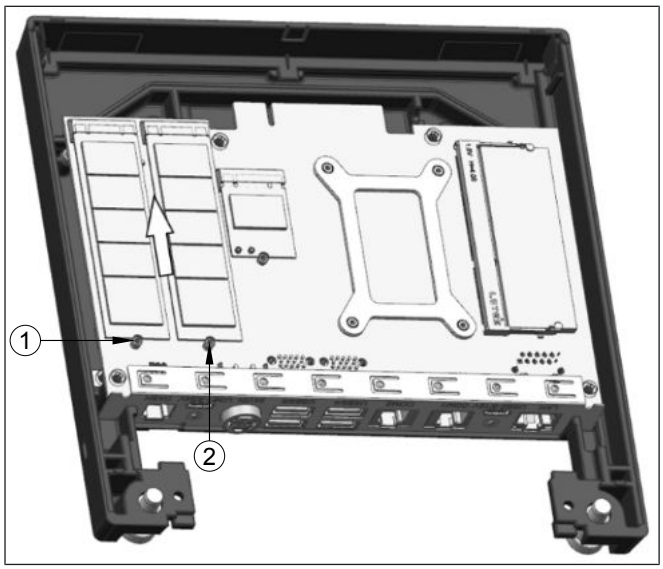

Figure 11-5: Inserting a new SSD

9. Insert the new SSD by pushing it into the slot in the direction indicated (arrow).
10. Put back and tighten the SSD screws (1) and (2) previously removed.
11. The back cover can now be assembled back onto the system.

Copyright © 2020, Diebold Nixdorf

11.2 Replacement of the RAM

1. First ensure that the device is switched off and the power connector is disconnected.
2. Proceed to replace the RAM with following the step below.

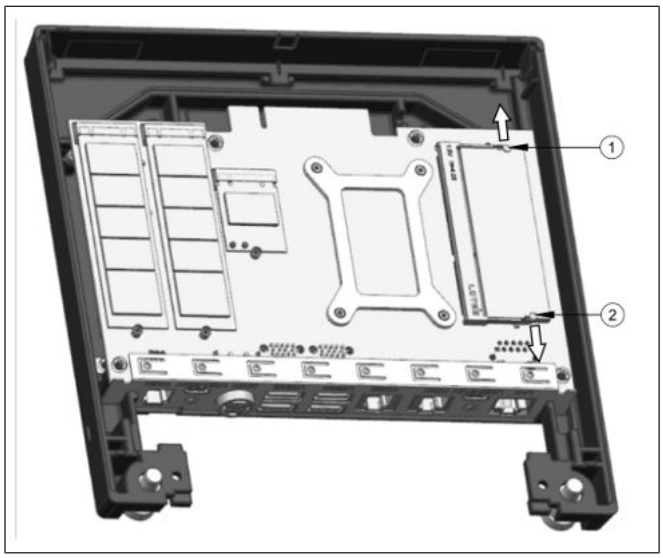

Figure 11-6: Replacing the RAM

3. To unhook the RAM, locate the 2 latches (1) and (2) by their sides.
4. Press them in an outwards direction (indicated by the arrows).
5. The RAM is now unhooked and can be removed and replaced.
6. When fitting in the new RAM, push it downwards until it latches on and a “click” sound is heard.

Copyright © 2020, Diebold Nixdorf

12 Installing System to a Wall

Unpack the parts from the wall mount kit and check whether the delivery matches the details of the delivery note.

12.1 Things you need

The kit contains:

Wall mount back plate Quantity: 1 piece	Wall mount front plate Quantity: 1 piece	M4x8 Torx screws Quantity: 4 pieces

For installation you will need the following (not supplied):

- a drill set
- a Torx screwdriver
- a marker
- 4 pieces of fasteners*

***Fastener types**

Fasteners are not included in the wall mount kit. The recommended fastener types to wall mount the system are:

Fischer universal plug (UX 6 x 50) (http://www.fischer.de)

Recommended Screw for wall is Pan head self-tapping M5 x 55.

Drill Diameter: 6 mm

Min Hole Depth: 60 mm

Load per anchor for concrete: 60 kg (Safety factor accounted for)

Load per anchor for Solid brick: 30 kg (Safety factor accounted for)

Thorsman wall plug (TP 6 x 30) (http://www.thorsman.com)

Recommended Screw for wall is Pan head Wood Screw TGS-C3- 4.8 x 38L

Drill Diameter: 6 mm

Min Hole Depth: 40 mm

Load per anchor for concrete: 40 kg

Load per anchor for Solid brick: 30 kg

Copyright © 2020, Diebold Nixdorf

Safety factor: 6

12.2 Mounting height

The mounting height of the system should be appropriate and comfortable for the majority of users.

Based on the recommendation of the ADA (American Disability Association), it is recommended that the highest point of the display should not exceed 1370mm height.

It is also recommended that the system is approximately 122cm (48 in) from the floor to the centre of the display when the user is in the standing position.

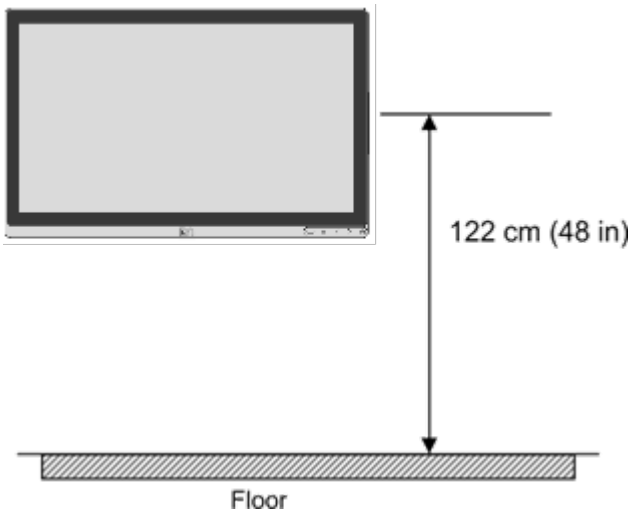

12.3 Mounting location

Once you have determine the mounting height, with the help of the wall mount back plate, mark the location of the four holes on the wall.

Copyright © 2020, Diebold Nixdorf

12.4 Installation

WARNING

The wall mount plate must be installed by a professional and qualified installer who is familiar with the building construction methods and the electrical code that are govern by the local laws on the public access areas.
Use only Diebold Nixdorf wall mount plate.

12.4.1 Fix wall mount back plate to the wall

- Prepare the mounting points penetrating from the wall according to the dimension of the mounting holes on the back of the system.
- When the system is mounted onto the wall, ensure that the wall mount back plate must be attached permanently and securely to prevent the system from falling and damaged. Failing to do so may also cause injury to others.
- Use the recommended fasteners (not supplied) to attach the wall mount back plate onto the concrete wall.
- Check and ensure that the wall mount back plate is mounted squarely by using a bubble level.
- After installation, ensure that the screw heads are flushed or below the outer surface of the wall mount back plate.
- Ensure that the wall mount back plate is firmly and securely attached to the wall.

Copyright © 2020, Diebold Nixdorf

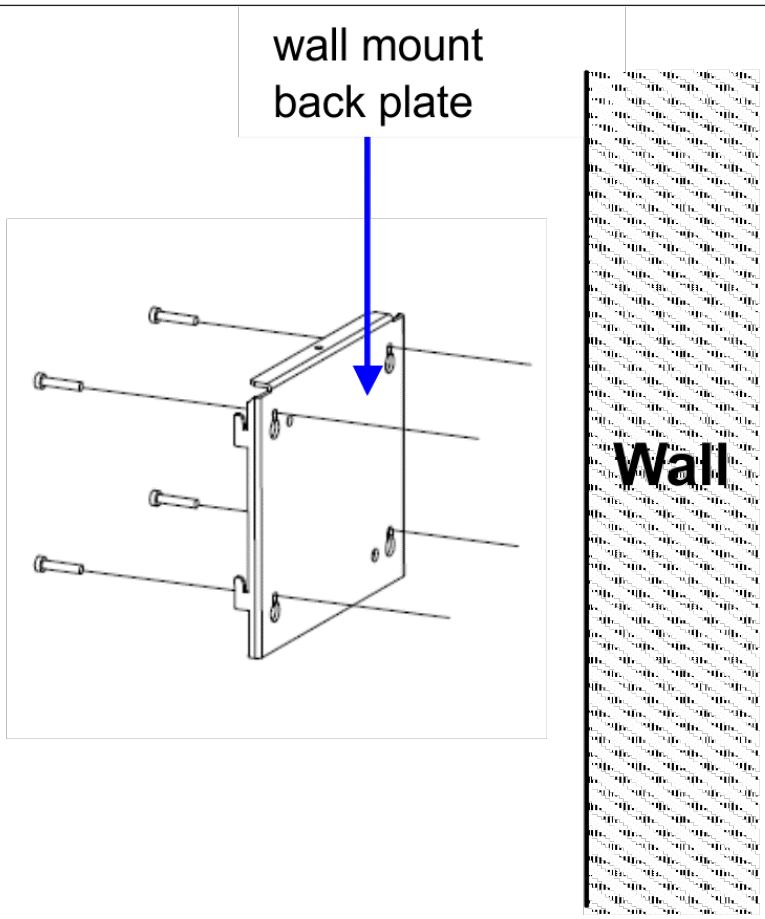
wall mount
back plate
Wall

12.4.2 Fix wall mount front plate to the system

- Align the 4 mounting holes of the wall mount front plate onto the mounting holes at the back of the display.

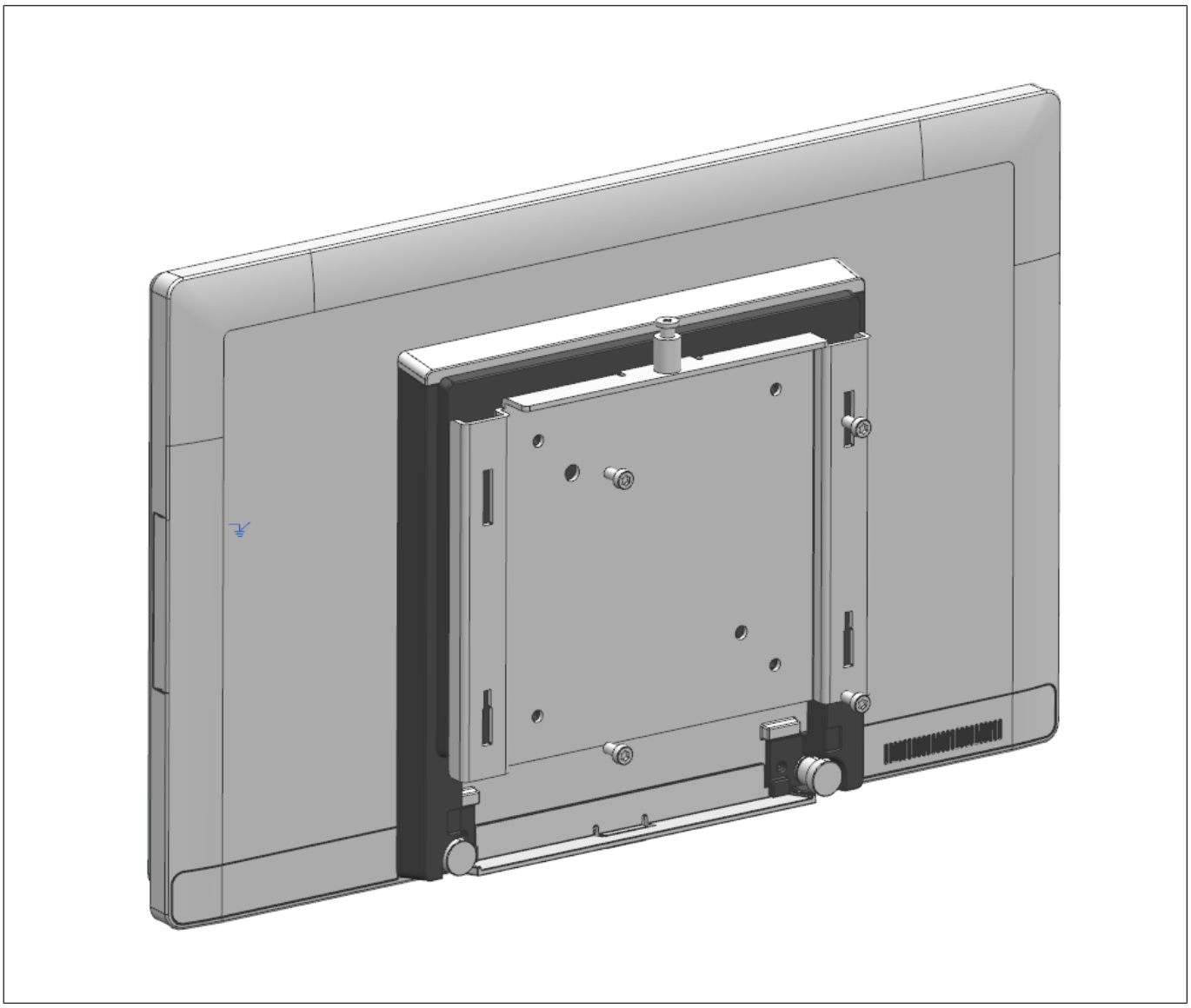

- Secure the wall mount front plate onto the display using the M4 screws provided in the wall mount kit.

12.4.3 Secure the system to the wall

- Ensure that the power cable has been connected onto the system.
- Hook the system with its wall mount front plate installed, onto the wall mount back plate that has been mounted on the wall. Ensure that the hooks at both sides of the wall mount back plate are securely locked on the slots of the wall mount front plate.

Copyright © 2020, Diebold Nixdorf

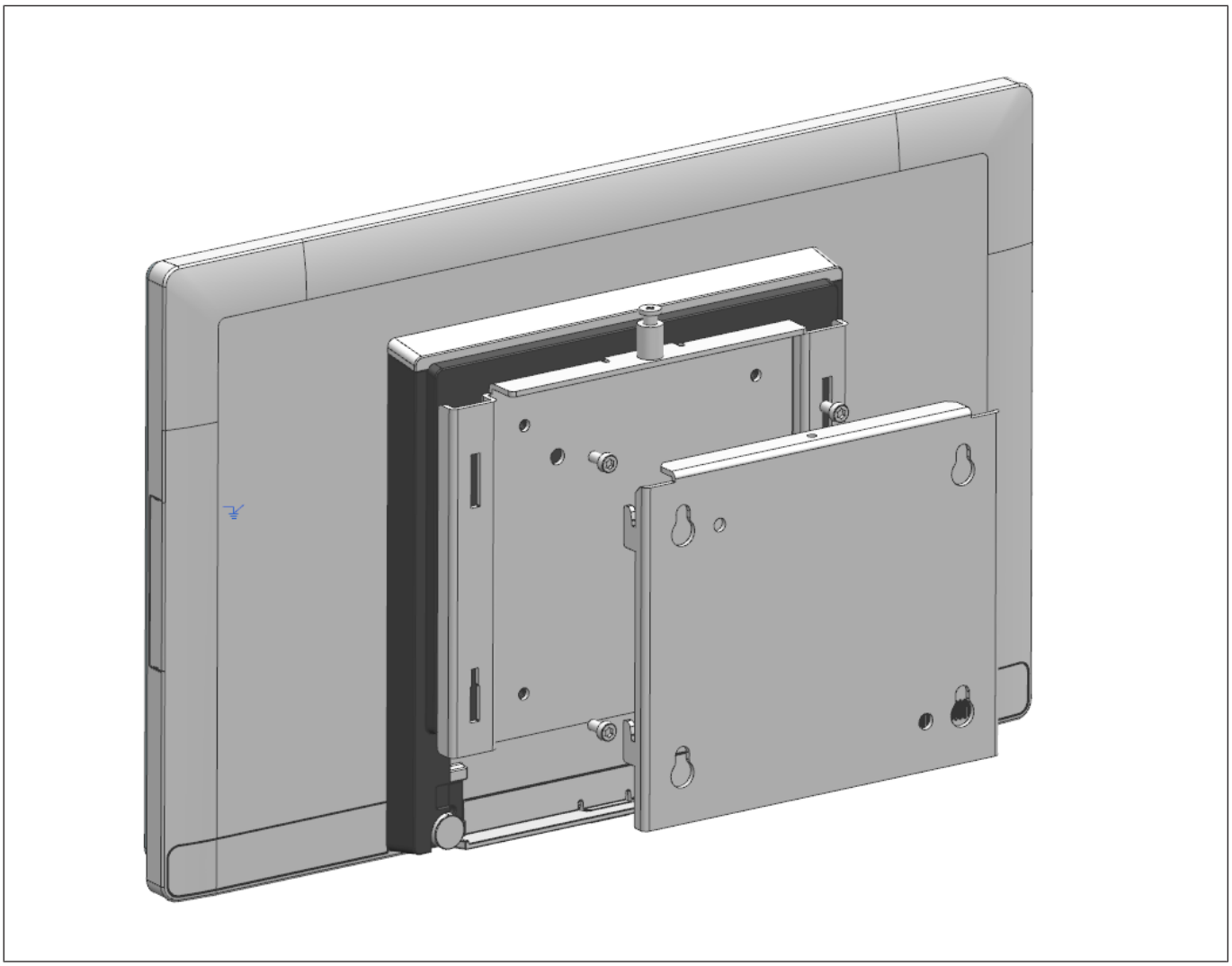

- Tighten the thumb screw on the top of the wall mount front plate to secure the hooks of the wall mount plates.
- Dress the cables routing according to the store set up or the overall installation site plan.

Copyright © 2020, Diebold Nixdorf

13 Mounting a Second Display (A1150/D1101)

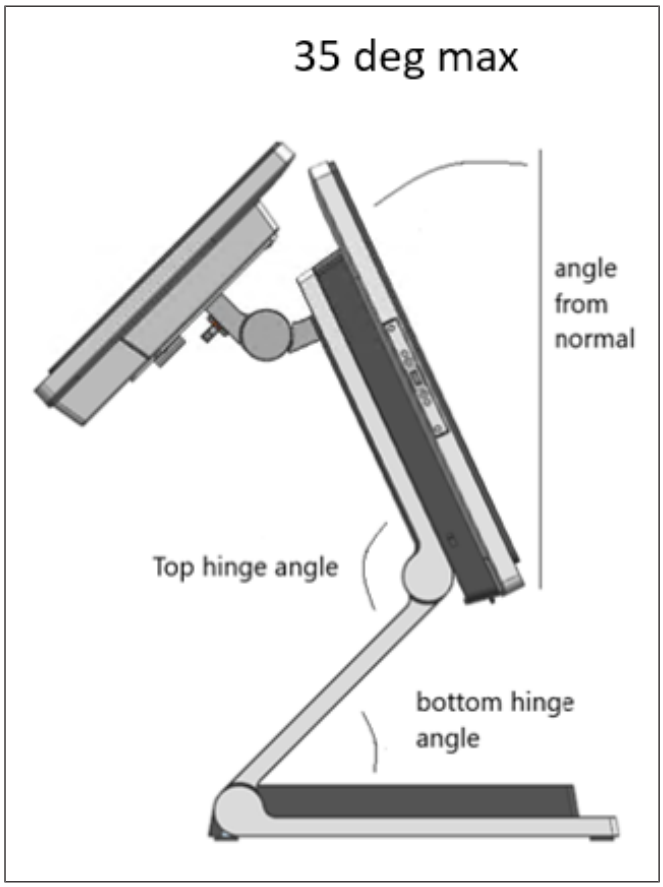

NOTE

Regardless of the **top hinge angle** and the **bottom hinge angle**, the **angle from normal** for A1150 needs to be kept at a maximum of 35° to maintain stability when the D1101 is mounted.

13.1 Installing the D1101 using an adapter kit

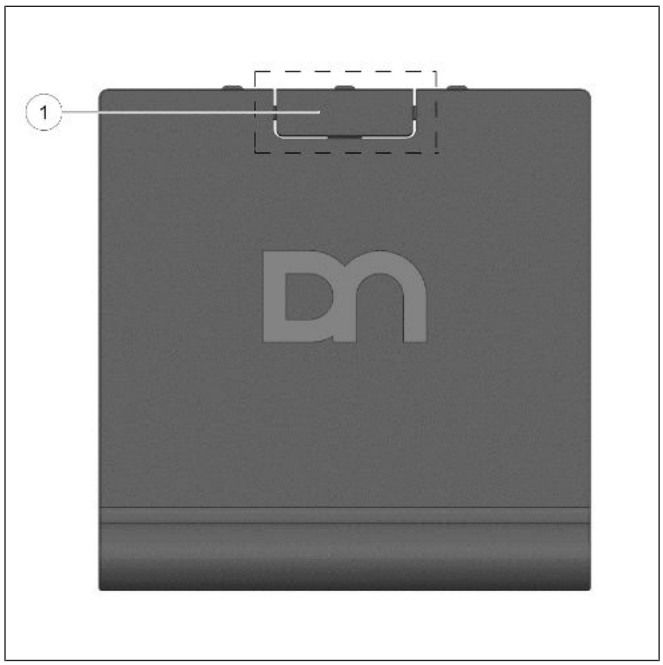

1. Remove the VESA cover from the stand.
2. Remove the breakaway (1) at the top.

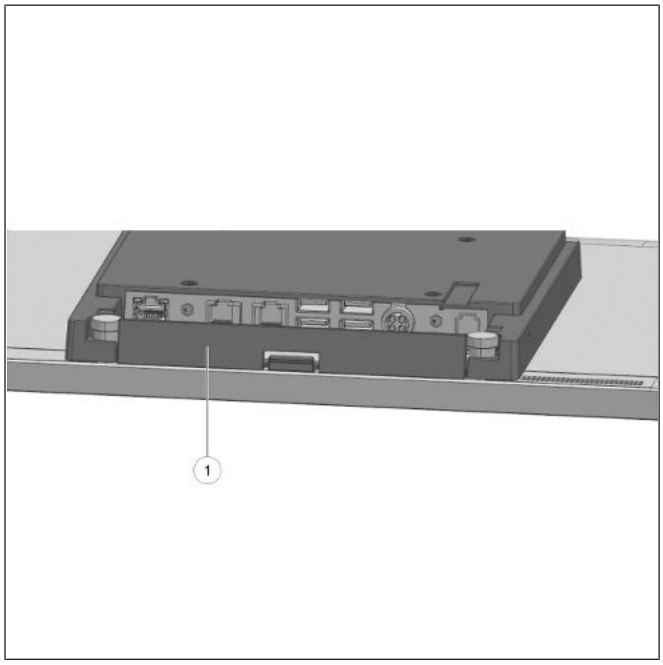

3. Remove the cable cover (1) from the system.

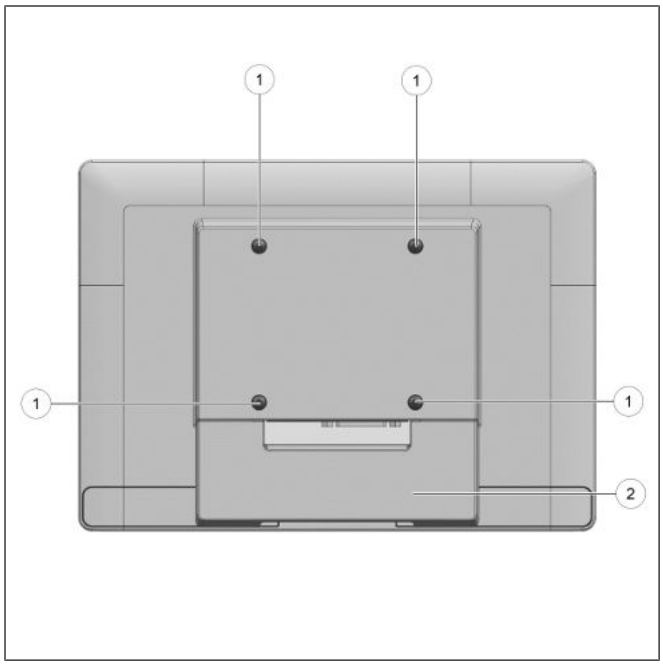

4. Remove the 4 VESA screws (1) from the D1101.
5. Then, remove the cable cover (2).

Copyright © 2020, Diebold Nixdorf

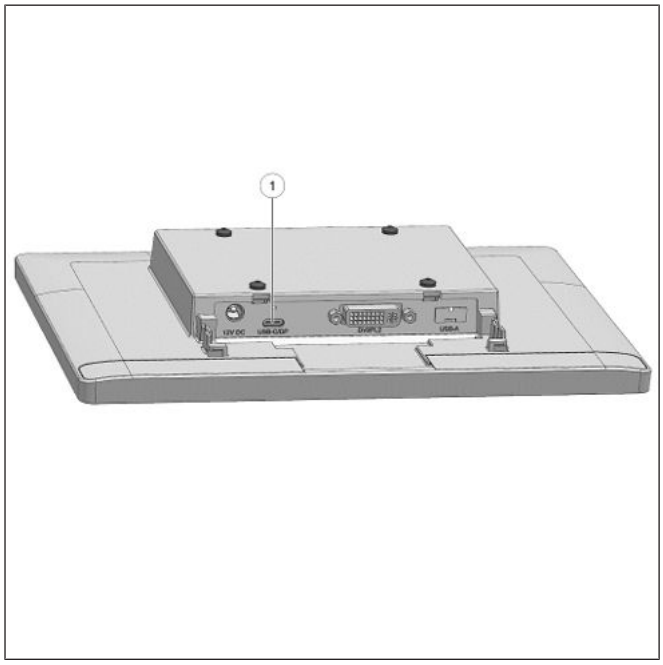

6. Connect the USB-C cable to the D1101.

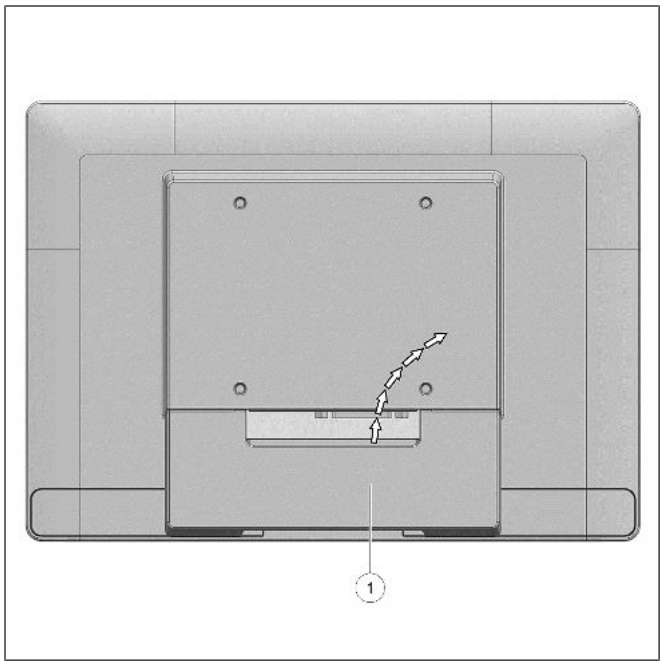

7. Replace the cable cover (1).
8. Allow the cable to exit from the top opening of the cable cover (arrows).

Copyright © 2020, Diebold Nixdorf

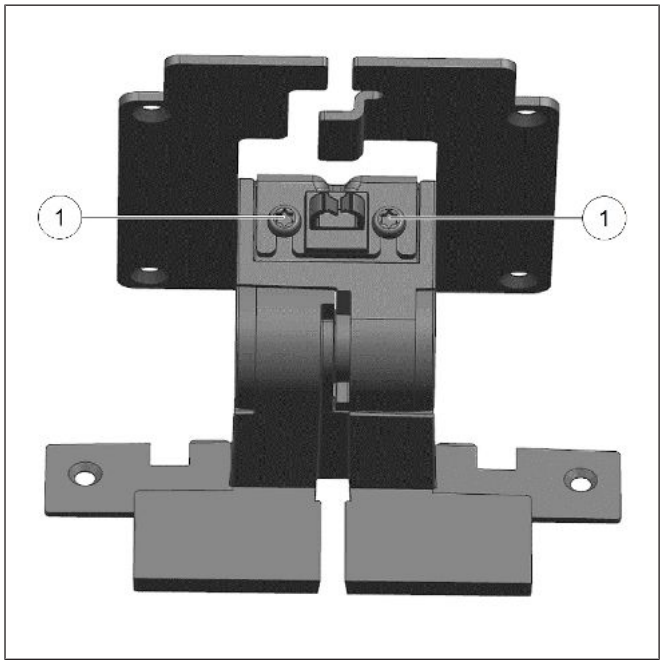

9. Loosen the 2 screws (1) to separate the D1101 adapter.

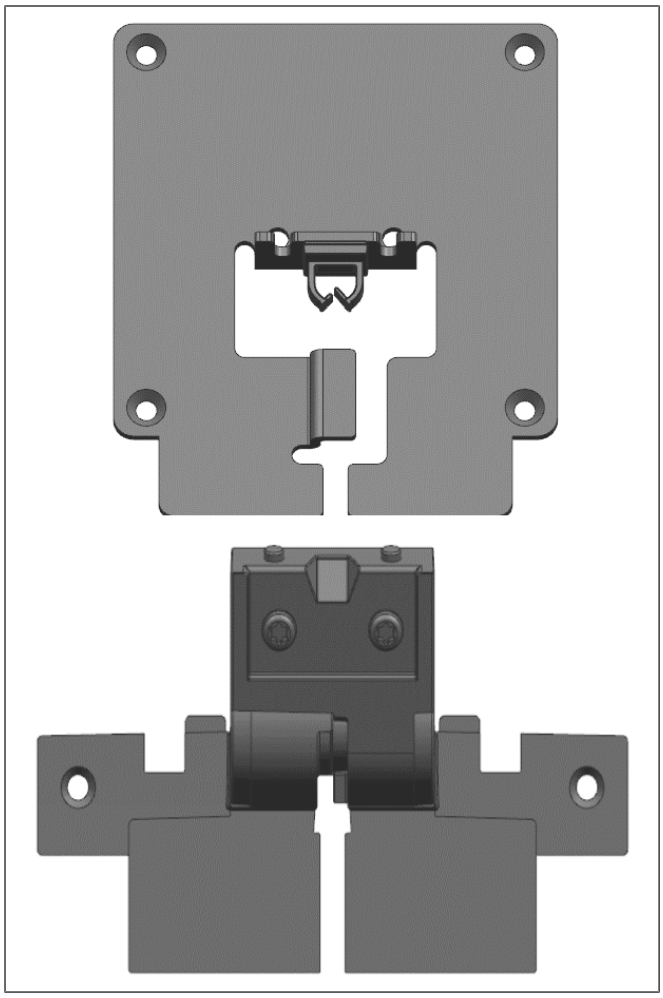

The components of the adapter kit are as seen.

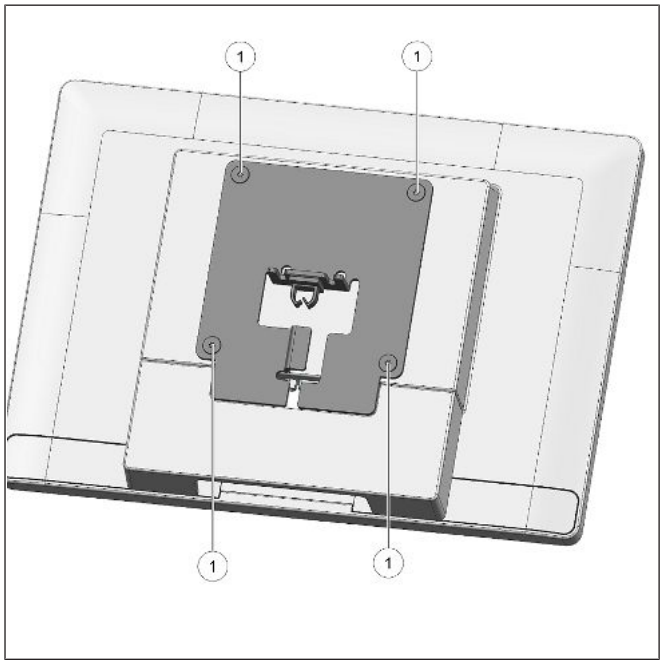

10. Secure the adapter to the D1101 using the 4 countersunk VESA screws (1) provided in the adapter kit.

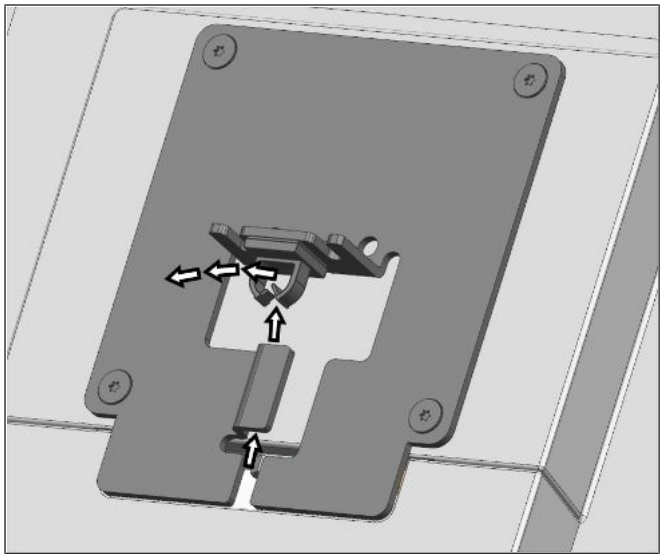

11. Route the cable along the path indicated by the arrows.

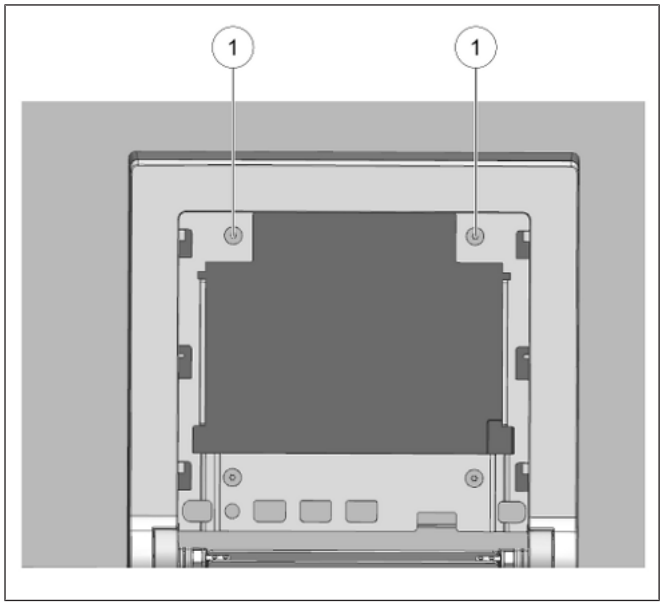

12. At the stand side, remove the 2 VESA screws securing the main system to the stand.

Copyright © 2020, Diebold Nixdorf

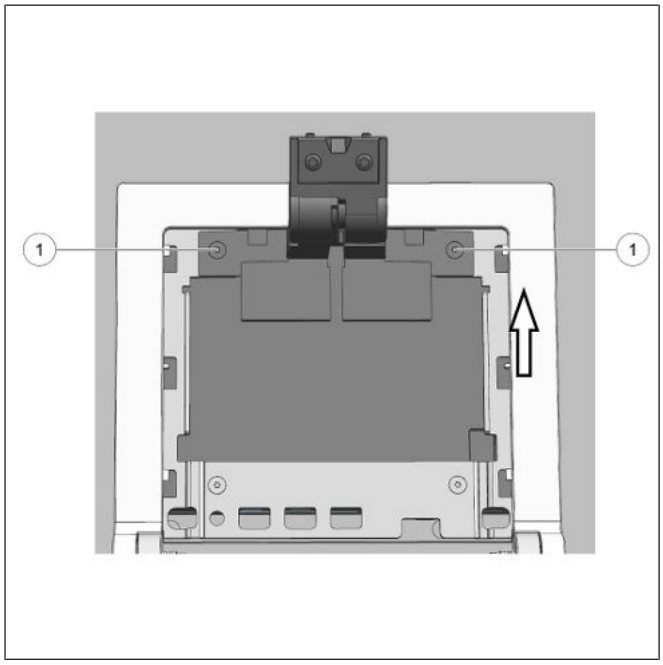

13. Slot in the adapter upwards (arrow).
14. Replace the 2 VESA screws (1).

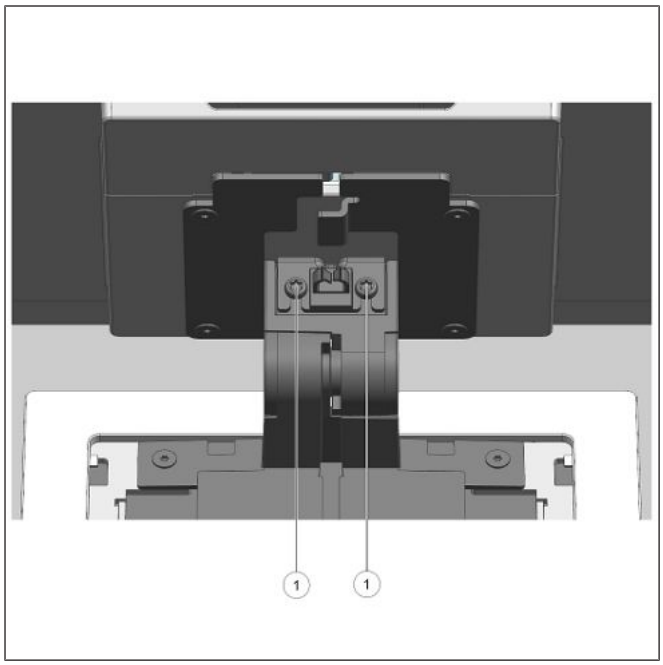

15. Slot in the D1101 and tighten the 2 screws (1).

Copyright © 2020, Diebold Nixdorf

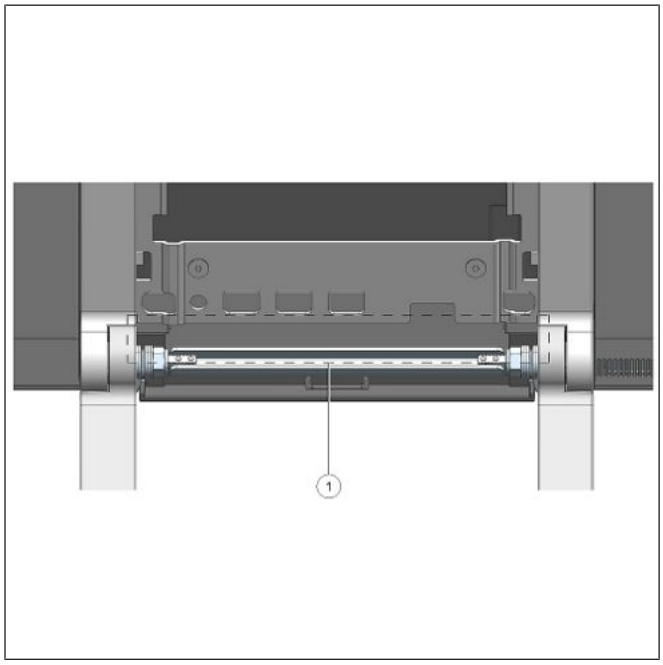

16. Route the cable along the opening (1).

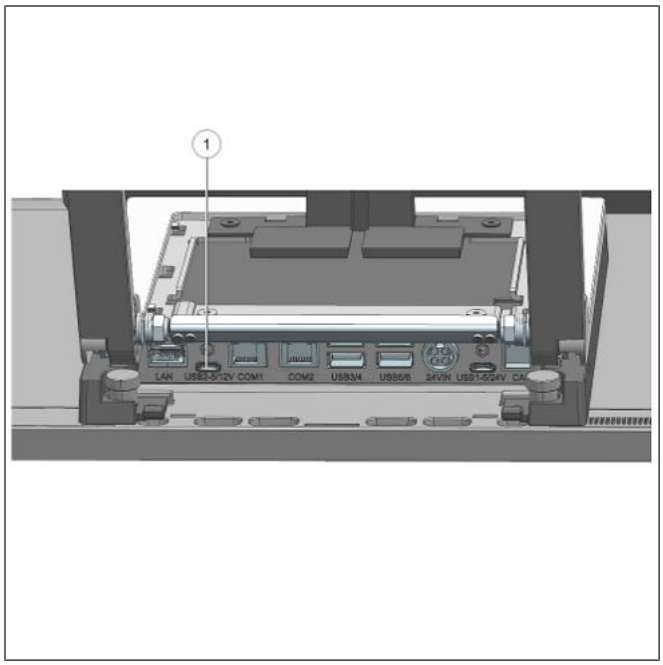

17. Connect the USB-C to the port indicated (1).

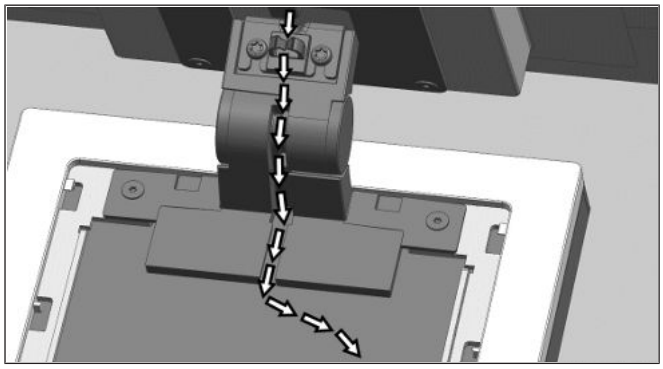

18. Route the cable along the path indicated by the arrows.

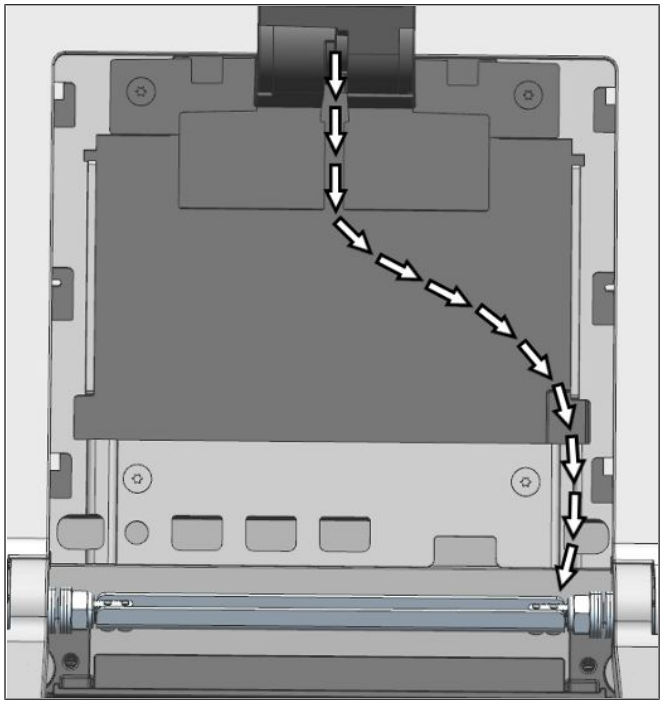

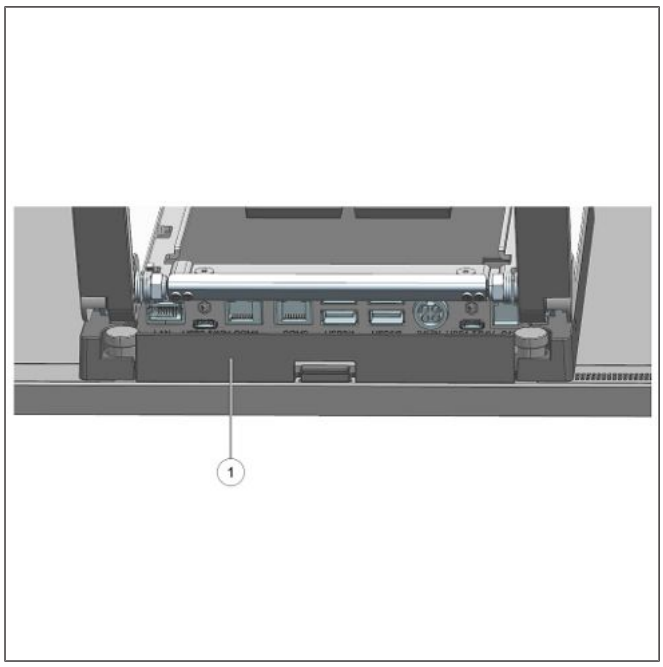

19. Replace the cable cover (1) on the system.

Copyright © 2020, Diebold Nixdorf

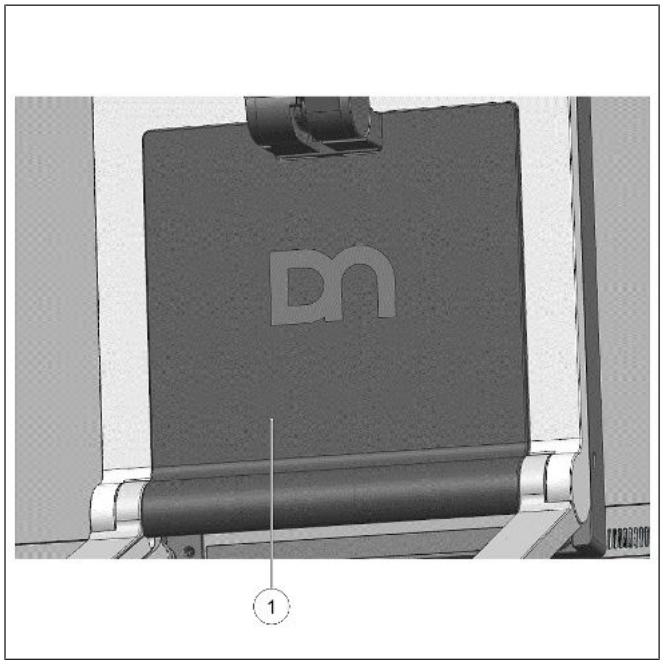

20. Replace the VESA cover (1).

The D1101 as a second display is assembled.

Copyright © 2020, Diebold Nixdorf

14 Peripherals (optional)

14.1 Waiter Lock

The Waiter Lock module is used for system access control.

The operation of the system is very simple, the key is placed onto the magnetic probe (see figure). The key is held magnetically to the probe and transmits the data by an electrical USB interface.

The readout of the data may be integrated easily in a software application.

NOTE

For guide on software application programming, please refer to BA9x MSR/Waiter Lock Programming Manual.

14.1.1 Installation

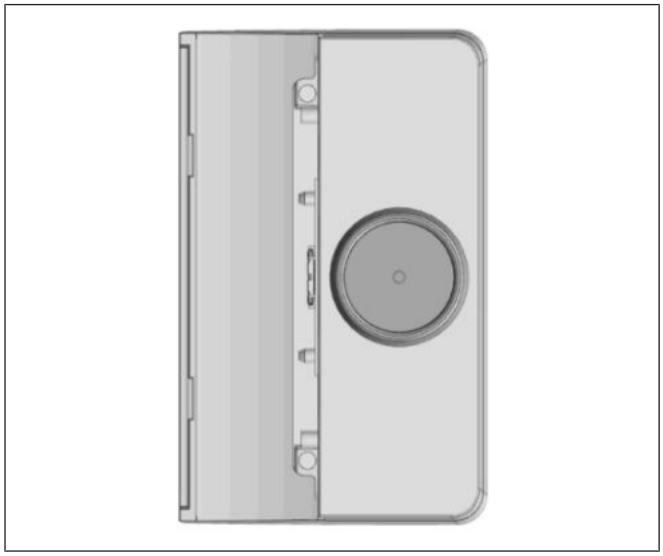

Figure 14-1: Waiter Lock kit

1. The Waiter Lock kit as seen. Containing the Waiter Lock module and two M3x4 screws.

Copyright © 2020, Diebold Nixdorf

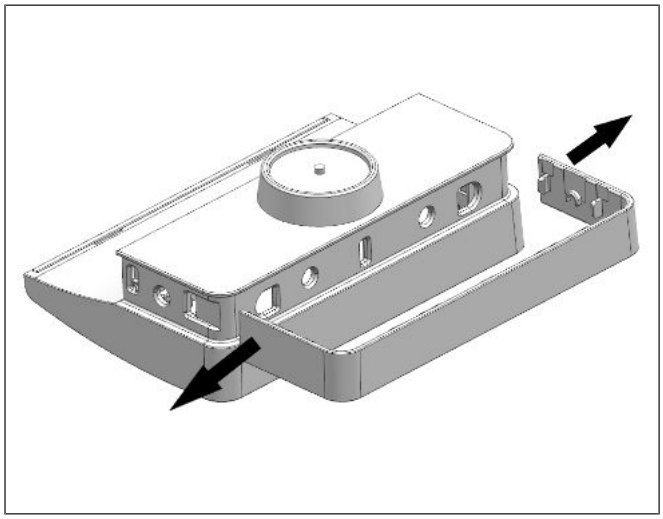

Figure 14-2: Removing Waiter Lock side cover

2. Gently remove the Waiter Lock side cover by prying the 2 ends outwards (see arrows) with a small screwdriver.

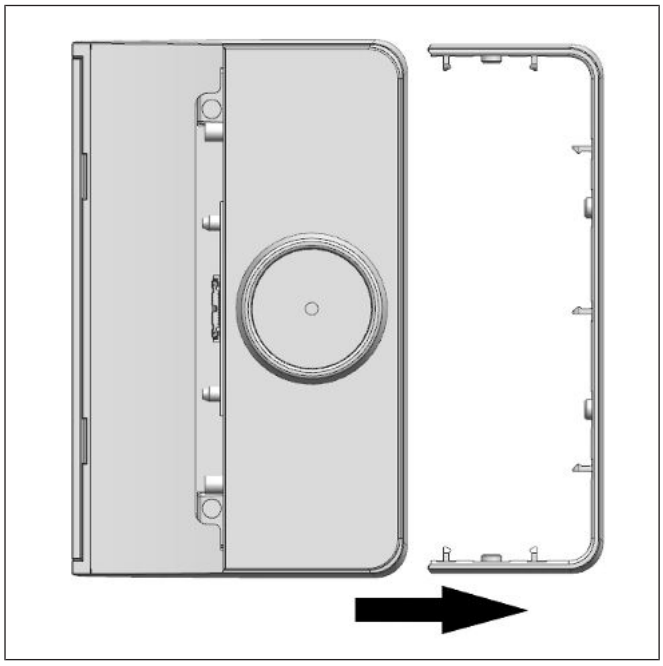

Figure 14-3: Sliding out the side cover

3. Then, slide the side cover out (see arrow).

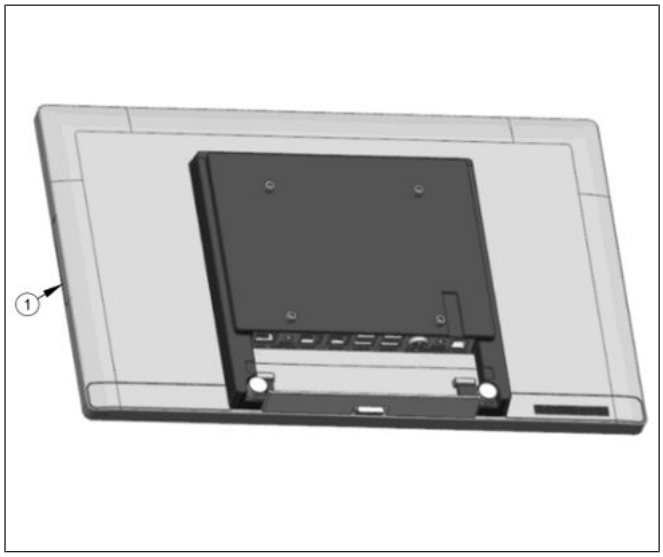

Figure 14-4: Removing the side-attach peripheral connection cover

4. Remove either side-attach peripheral connection cover of the Beetle A Series.

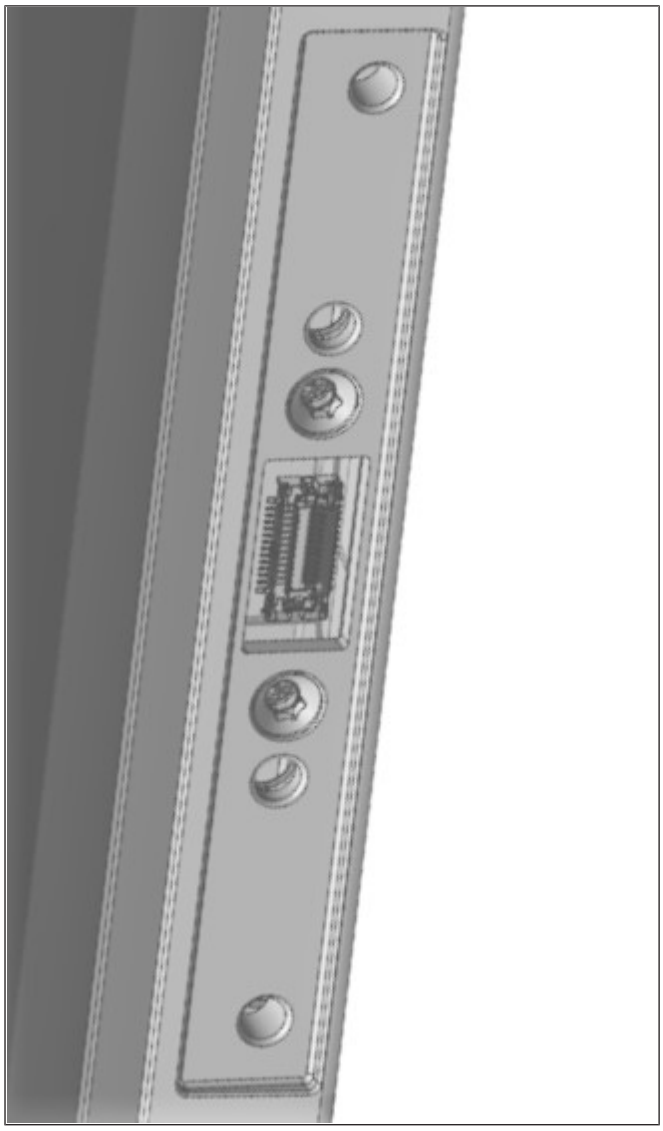

Figure 14-5: Side-attach peripheral connection cover removed

5. The side-attach peripheral connection cover now removed as seen.

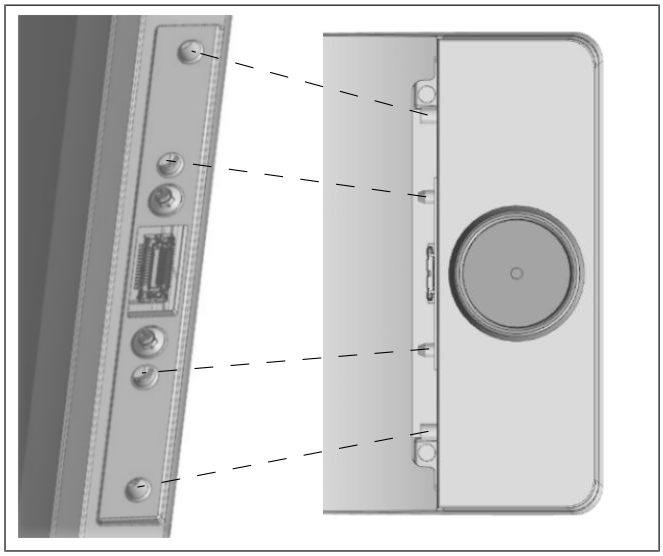

Figure 14-6: Fitting the Waiter Lock into the Beetle A Series

6. Insert the Waiter Lock module into the now exposed USB port of the Beetle A Series.
7. Fit each knob on the Waiter Lock module into its respective groove on the system as indicated.

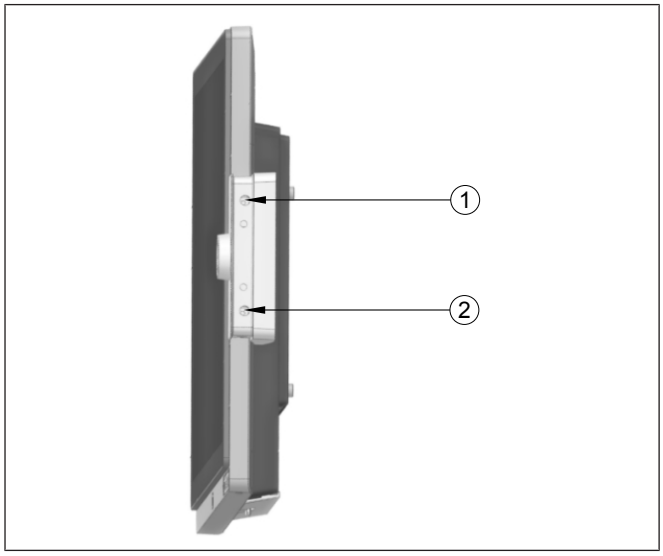

Figure 14-7: Tightening the Waiter Lock screws

8. Then put on and tighten two M3x4 screws at (1) and (2).

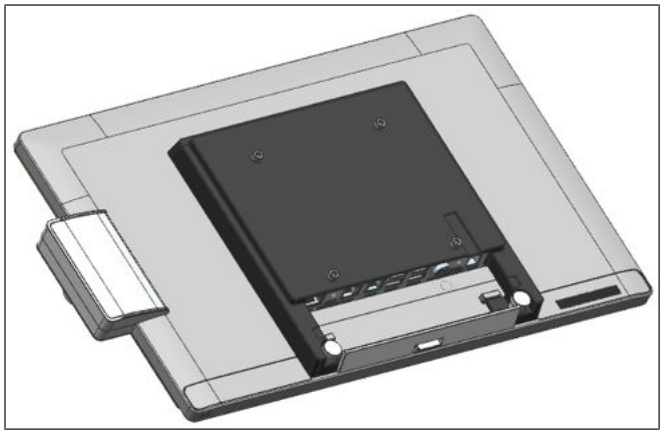

Figure 14-8: Waiter Lock installed

9. Re-attach the side-attach peripheral connection cover.
10. Re-attach the Waiter Lock side cover.
11. The Waiter Lock is now installed.

Copyright © 2020, Diebold Nixdorf

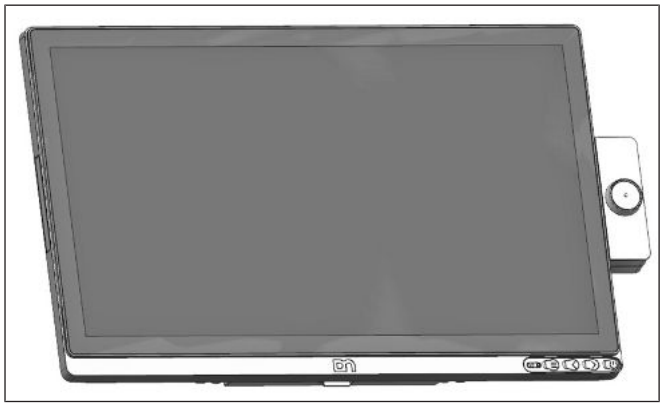

Figure 14-9: Front view with Waiter Lock

12. The front view of the Beetle A Series with the Waiter Lock as seen.

14.2 Magnetic Swipe Card Reader (MSR)

The MSR module supports reading of standard ISO 3-track magnetic swipe card. Card reading is bi-directional.

The MSR module can be mounted either on the right or left side of the display.

14.2.1 How to operate

Run the swipe card through the slit of the swipe card reader from top to bottom in a quick and steady movement. Make sure that the magnetic strip is to the right. When using swipe cards, the following should be observed:

- Swipe cards should never be allowed to come into contact with liquids.
- Swipe cards should not be bent or folded in any way.
- Swipe cards should not be allowed to come into close contact with a magnetic field.

Swipe cards should only be inserted in the top of the specially designed slit of the reading device. If the card is inserted in another place, this could damage the reading head.

14.2.2 Cleaning instructions

In order to guarantee good reading results, the swipe card reader should be cleaned from time to time. This is carried out by using a special cleaning card that can be purchased from Diebold Nixdorf.

14.2.3 Installation

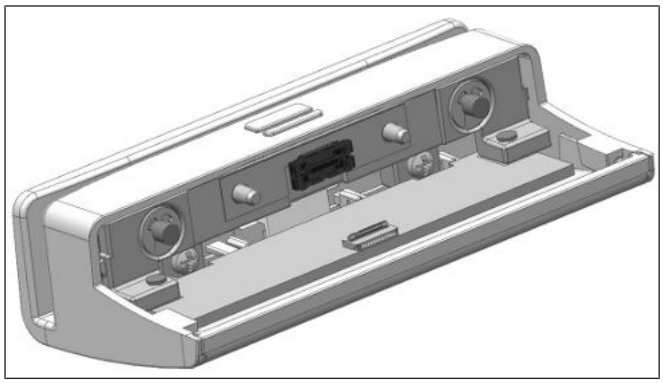

Figure 14-10: MSR kit

1. The MSR kit as seen. Containing the MSR module and two M3x4 screws.

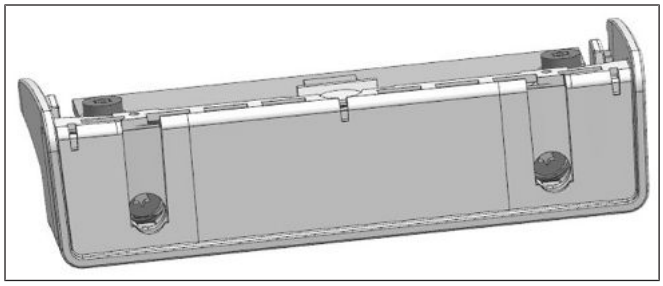

Figure 14-11: Removing side cover of MSR module

2. Gently remove the side cover of the MSR module found on the other side.

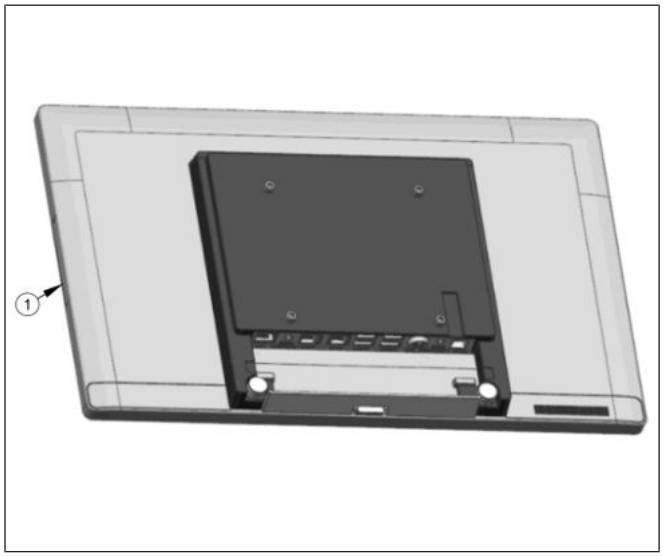

Figure 14-12: Removing the side-attached peripheral connection cover

3. Remove either side-attach peripheral connection cover (1) of the Beetle A Series.

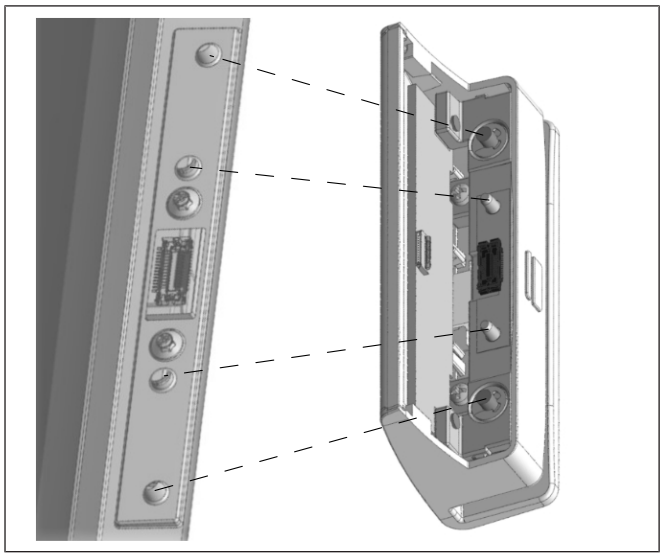

Figure 14-13: Fitting the MSR module into the Beetle A Series

4. Insert the MSR module into the now exposed USB port of the Beetle A Series.
5. Fit each knob on the MSR module into its respective groove on the system as indicated.

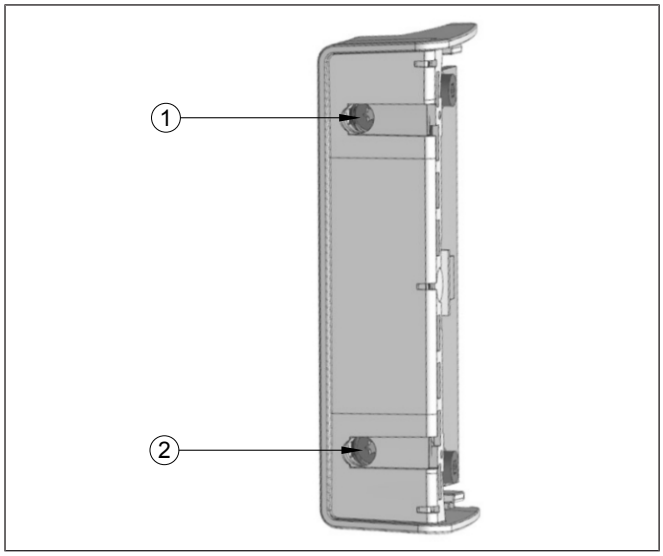

Figure 14-14: Tightening the screws of the MSR module

6. Then put on and tighten two M3x4 screws.

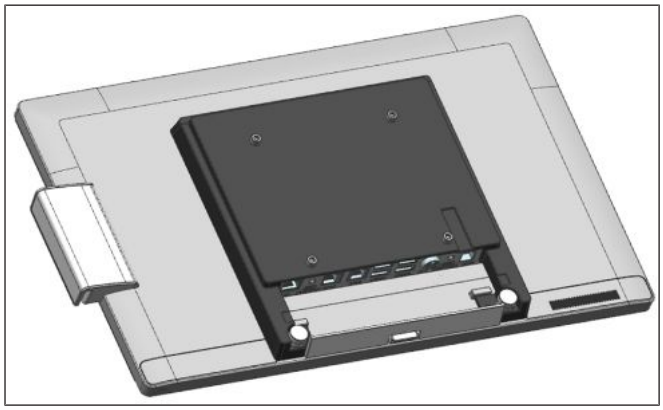

Figure 14-15: MSR module installed

7. Re-attach the side peripheral connection cover.
8. Re-attach the MSR module side cover.
9. The MSR is now installed. Back view of the Beetle A Series, with the MSR as seen.

Figure 14-16: Front view with MSR module

10. The front view of the Beetle A Series, with the MSR as seen.

14.3 NFC Module

The Waiter Lock module is used for system access control.

The operation of the system is very simple, the key is placed onto the magnetic probe (see figure). The key is held magnetically to the probe and transmits the data by an electrical USB interface.

The readout of the data may be integrated easily in a software application.

NOTE

For guide on software application programming, please refer to BA9x MSR/Waiter Lock Programming Manual.

14.3.1 Installation

Figure 14-17: NFC module kit

1. The NFC Module kit as seen. Containing the NFC module and two M3x4 screws.

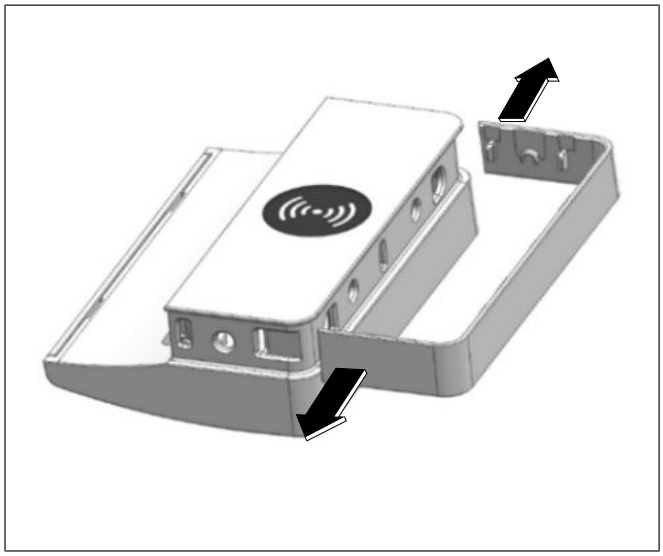

Figure 14-18: Removing the NFC module side cover

2. Gently remove the NFC Module side cover by prying the 2 ends outwards (arrows) with a small screwdriver.

Figure 14-19: Sliding out the side cover

3. Then, slide the side cover out (see arrow).

Copyright © 2020, Diebold Nixdorf

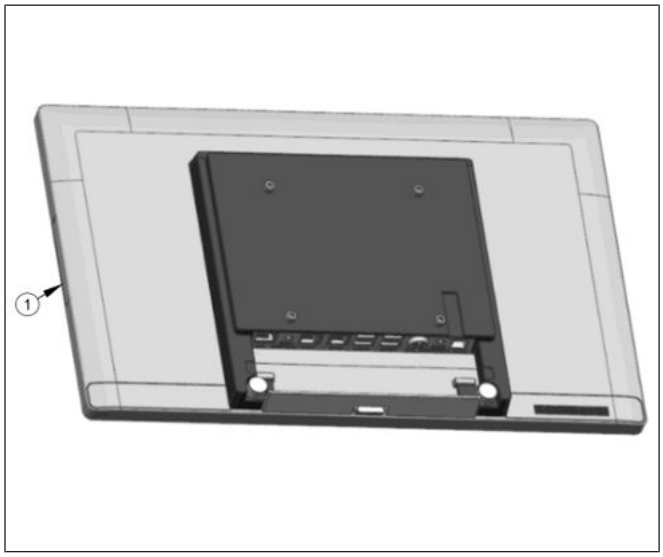

Figure 14-20: Removing the side-attach peripheral connection cover

4. Remove either side-attach peripheral connection cover of the Beetle A Series.

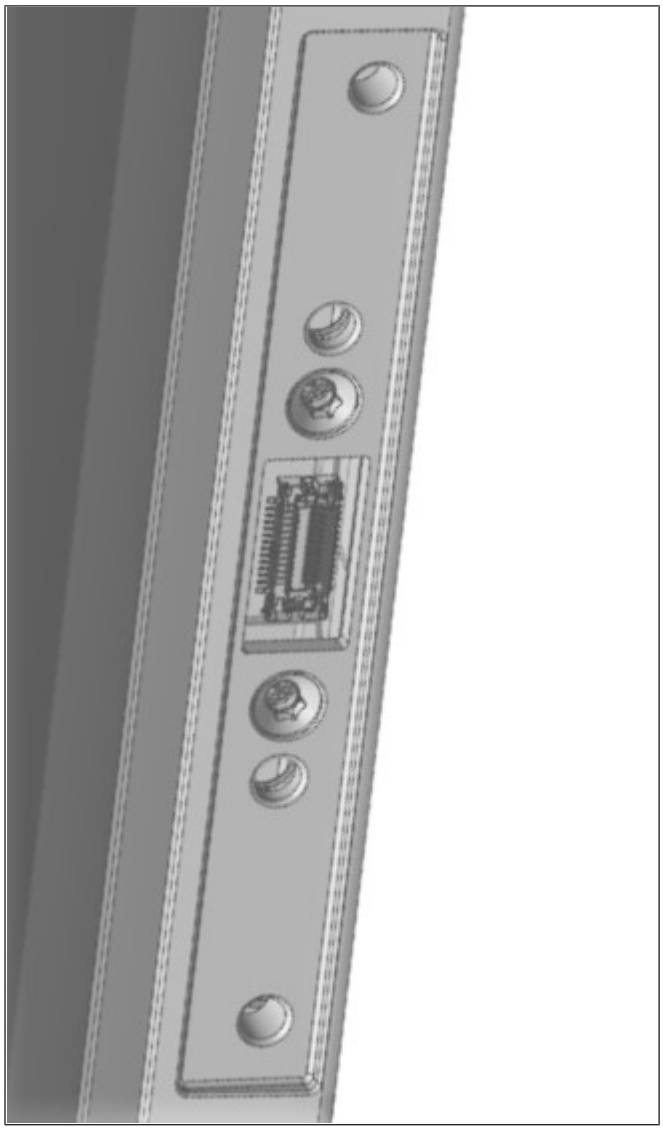

Figure 14-21: Side-attach peripheral connection cover removed

5. The side-attach peripheral connection cover now removed as seen.

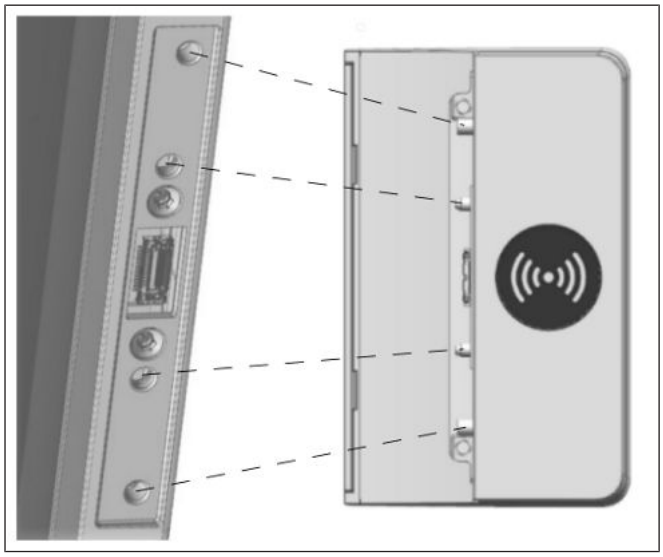

Figure 14-22: Fitting the NFC module into the Beetle A Series

6. Insert the NFC module into the now exposed USB port of the Beetle A Series.
7. Fit each knob on the NFC Module into its respective groove on the system as indicated.

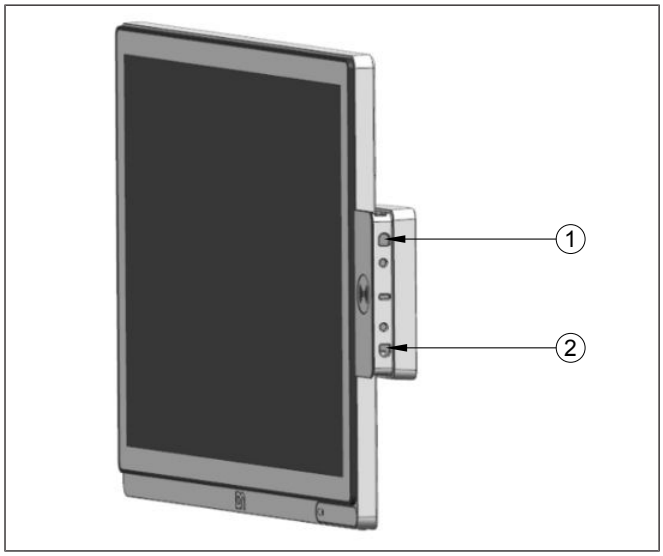

Figure 14-23: Tightening the screws of the NFC module

8. Then put on and tighten two M3x4 screws at (1) and (2).

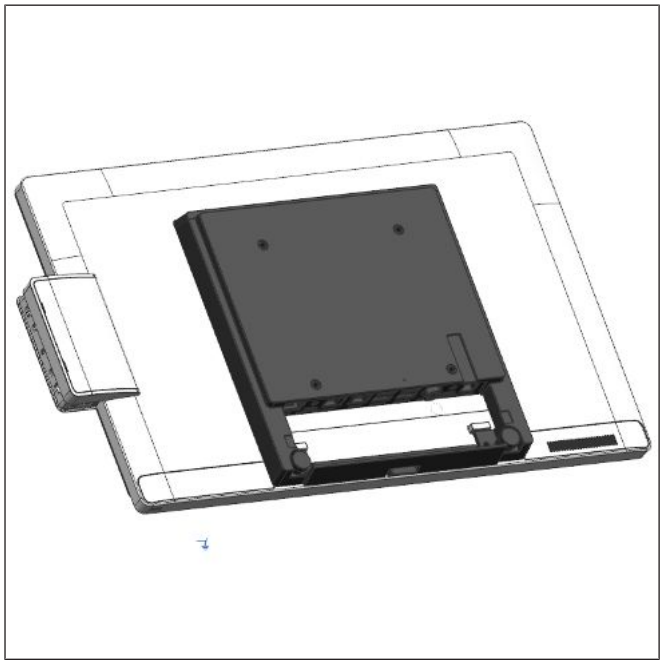

Figure 14-24: NFC module installed

9. Re-attach the side-attach peripheral connection cover.
10. Re-attach the NFC Module side cover.
11. The NFC Module is now installed.

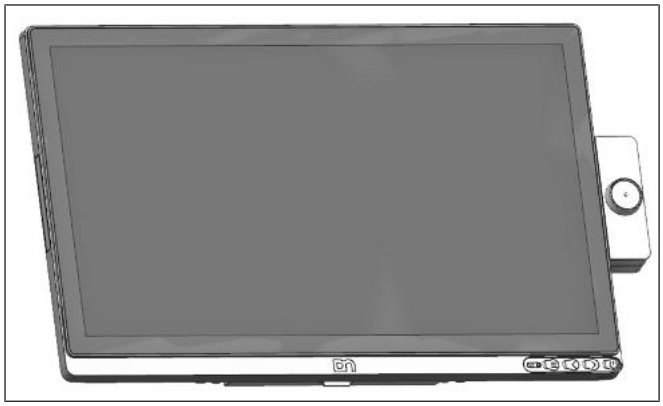

Figure 14-25: Front view with NFC module

The front view of the Beetle A Series with the NFC Module as seen.

15 Starting Up the System

After installing the Beetle A Series, switch on the system by using the Power button on the front panel.

The system first performs an automatic self-test to test its basic functions.

For example, you may see the following message (irrespective of processor type) on the monitor:

```
DN „ID xx/xx Date“
xx/xx
```

is the *placeholder* of the BIOS version number.

Following the completion of the BIOS boot up, the BIOS will attempt to boot up an operating system from a bootable media. The BIOS default boot order from highest priority is,

1. LAN PXE ROM
2. HDD/SSD
3. USB Key
4. USB HDD
5. USB ODD

If no bootable media is present and a message will be prompted on the display.

16 Error Reporting

When an error condition is detected, it is reported by a repetitive train of blinking red LED. Decode by counting the number of blinks in a train and check against the error code table below.

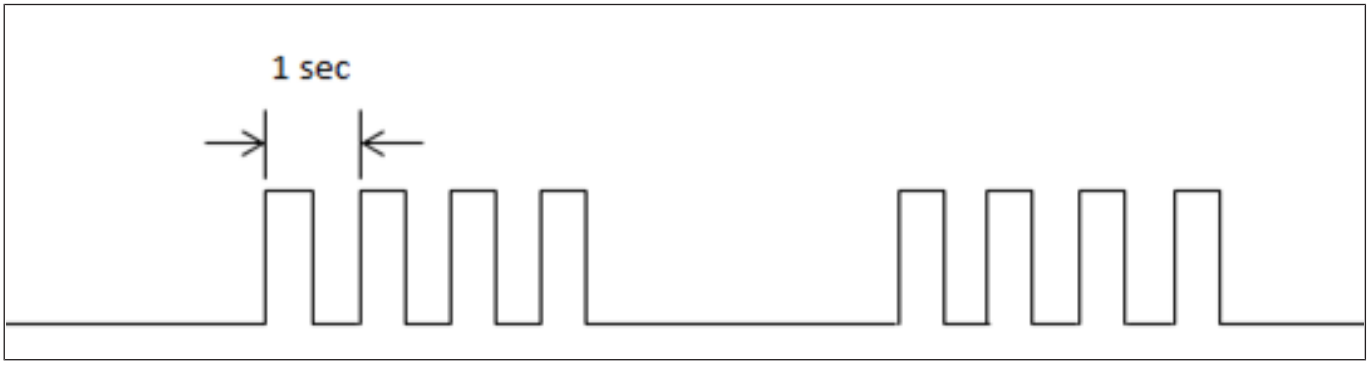

Figure 16-1: Error reporting

Number of Pulse	Description of error	Possible cause
1	SSD failed	SSD may be faulty
2	NA	
3	Processor Hot was activated	Excessive load or thermal pads may be degraded.
4	NA	
5	Capacitive sense not present or faulty	Cable loose or Capacitive sense board may be faulty
6	Ambient Light Sensor/Proximity Sensor not present or faulty	Cable loose or Capacitive sense board may be faulty
7	PCH Hot was activated	Excessive load or thermal pads may be degraded.
8	Processor thermtrip was activated	Excessive load or thermal pads may be degraded.
9	DDR VR faulty	Motherboard may be faulty
10	Cannot access configuration EEPROM	Either docking board or motherboard is faulty.
11	USB1 PD chip read/write error	To recover do a cold reboot
12	USB1 PD chip execution error	To recover do a cold reboot
13	USB1 PD chip not detected	To recover do a cold reboot
14	24V DC-IN voltage in indeterminate region	To recover do a cold reboot

Copyright © 2020, Diebold Nixdorf

17 POST Code

When an error occurs during BIOS boot up, the system will stall and the POST code will be emitted in a sequence of 8 long/short blinks of the amber LED at the front panel. A long blink represents logic ‘1’ and a short blink logic ‘0’. Record the 8 bits code.

Phase	**Error Codes**	**Error Description**
SEC Phase	0x0E	Microcode not found
	0x0F	Microcode not loaded
PEI Phase	0x50	Memory initialization error. Invalid memory type or incompatible memory speed
	0x51	Memory initialization error. SPD reading has failed
	0x52	Memory initialization error. Invalid memory size or memory modules do not match.
	0x53	Memory initialization error. No usable memory detected
	0x54	Unspecified memory initialization error.
	0x55	Memory not installed
	0x56	Invalid CPU type or Speed
	0x57	CPU mismatch
	0x58	CPU self test failed or possible CPU cache error
	0x59	CPU micro-code is not found or micro-code update is failed
	0x5A	Internal CPU error
	0x5B	reset PPI is not available
	0x5C	PEI phase BMC self-test failure
	0xE8	S3 Resume Failed
	0xE9	S3 Resume PPI not Found
	0xEA	S3 Resume Boot Script Error
	0xEB	S3 OS Wake Error
	0xF8	Recovery PPI is not available
	0xF9	Recovery capsule is not found
	0xFA	Invalid recovery capsule
DXE Phase	0xD0	CPU initialization error
	0xD1	North Bridge initialization error

Copyright © 2020, Diebold Nixdorf

	0xD2	South Bridge initialization error
	0xD3	Some of the Architectural Protocols are not available
	0xD4	PCI resource allocation error. Out of Resources
	0xD5	No Space for Legacy Option ROM
	0xD6	No Console Output Devices are found
	0xD7	No Console Input Devices are found
	0xD8	Invalid password
	0xD9	Error loading Boot Option (LoadImage returned error)
	0xDA	Boot Option is failed (StartImage returned error)
	0xDB	Flash update is failed
	0xDC	Reset protocol is not available
	0xDD	DXE phase BMC self-test failure

Copyright © 2020, Diebold Nixdorf

18 Technical Data

		Whiskey Lake	
		15-inch display	**15.6-inch display**
Dimensions	Diagonal Screen size	15"	15.6"
	Active screen size (mm)	305.13 x 229.1 (H x V)	344.16 x 193.59 (H x V)
	Basic unit (mm)	338.7 x 273.4 x 37.2	376.11 x 236.59 x 37.20
Weight	BEETLE A1150	-	2.3kg
	BEETLE A1050	2.8kg	-
	Standard stand	1.8kg	
	Stand with cable covers	1.9kg	
	Stand with I/O hub cover (excluding I/O hub)	1.3kg	
	I/O hub	0.36kg	
Climatic Class		DIN IEC 721-3-3 Class 3K3 up to 40ºC	
Operating Temperature		+5ºC to +40ºC	
Humidity		5% to 85% Relative humidity 1g/m^3 to 25g/m^3 Condensation is not permitted	
Display Characteristics	Pixels H x V	1024 x 768	1920 x 1080
	White Luminance	400 cd/m^2 (typical)	
	Contrast Ratio	2500 (typical)	1000 (typical)
	Optical Response Time	23ms (typical)	25ms (typical)
	Supported Color	16.7M	16.2 M (RGB 6-bits +FRC)
	Surface Treatment	Hard Coating (3H), Anti-Glare	Anti-Glare
	Viewing Angle	80/88°	80/89°
Touch		Projected Capacitive Touch	
User Accessible I/O		2x USB 2.0 Type A 2x USB 3.0 Type A 1x RJ12 Cash Drawer 1x RJ45 Gigabit LAN	

Copyright © 2020, Diebold Nixdorf

		2x RJ50 Powered COM port 1x USB Type-C, PD 2.0, DP1.2, DFP/DRP (5V/12/24V) 1x USB Type-C, PD 2.0, DP 1.2, DFP (5V/12V)
Expansion Options	Internal	2x M.2 2280 socket (for SSD) 1x M.2 2230 socket (for WiFi)
	External	MSR, Waiter Lock, NFC reader
Other Features		Projected capacitive touch panel
		Ambient Light Sensor
		Proximity Sensor
		Hardware TPM 2.0 (optional)
		Integrated antenna for Wifi / Bluetooth (optional)
Power Rating		24V DC / 4A
I/O Expansion Option		Multi-I/O Hub (see technical data *Section 18.3*)

Copyright © 2020, Diebold Nixdorf

18.1 AC Power Adapter

Only use power supply units (PSU) released or approved by Diebold Nixdorf. The PSU has to comply with the following minimal requirements and common standards:

Rated input voltage	100-240VAC
Rated input current	1.2A
Input frequency range	47-63 Hz
Rated output voltage	24V ± 5%
Rated output current	3.75A
Max. output power	90W at ambient of 45 degree C, 100W at ambient of 55 degree C
Approvals and Certification	UL Listed, TÜV-GS, CE

Copyright © 2020, Diebold Nixdorf

18.2 NFC Module

Supported Standards	ISO/IEC 14443A/MIFARE ISO/IEC 14443B FeliCa ISO 18092 passive initiator
Validated IC cards/Tags	NFC Forum tags Innovision Topaz / Jewel NXP Mifare Ultralight Sony Felica NXP DESfire, NXP SmartMX with JCOP
RF Operating Frequency	13.56 MHz
Host Interface	USB 2.0 full speed CCID protocol support
Rated Voltage	5 V
Rated Current	300mA on transmitter path
RF Output Power	1W (max.)
Operating Temperature	5 ºC to 40 ºC
Device Firmware Upgrade	N/A
Middleware support	N/A
Operating Systems	Windows & Linux
Certification	EN 50364

Copyright © 2020, Diebold Nixdorf

18.3 I/O Hub

The I/O Hub (illustration on next page) is an accessory for the Beetle A Series, to extend the number of I/O ports.

Power input	DC24V IN	24V DC, 4A
User interface	USB-C (Right)	USB Type C, PD 3.0, DP 1.2, UFP Dual Power Role (5V, 24V/4A)
	USB-C (Left)	USB Type C, PD 2.0, DP 1.2, DFP Source only (5V, 12V/2A)
	PUSB12V	Powered USB 12V, 3A
	PUSB24V	Powered USB 24V, 3A
	COM5, 6 & 7	RJ50 Powered COM ports 5V, 1A combined 12V, 1A combined
	LAN	RJ45 Gigabit LAN
	Cash	RJ12 Cash Drawer (12V/24V)

NOTE

Please note that MAX 70W load is allowed for any combination of the interface connectors.

NOTE

A second display attached to the I/O Hub Type-C will not display the BIOS settings menu.

*Refer to next page for illustration.

Copyright © 2020, Diebold Nixdorf

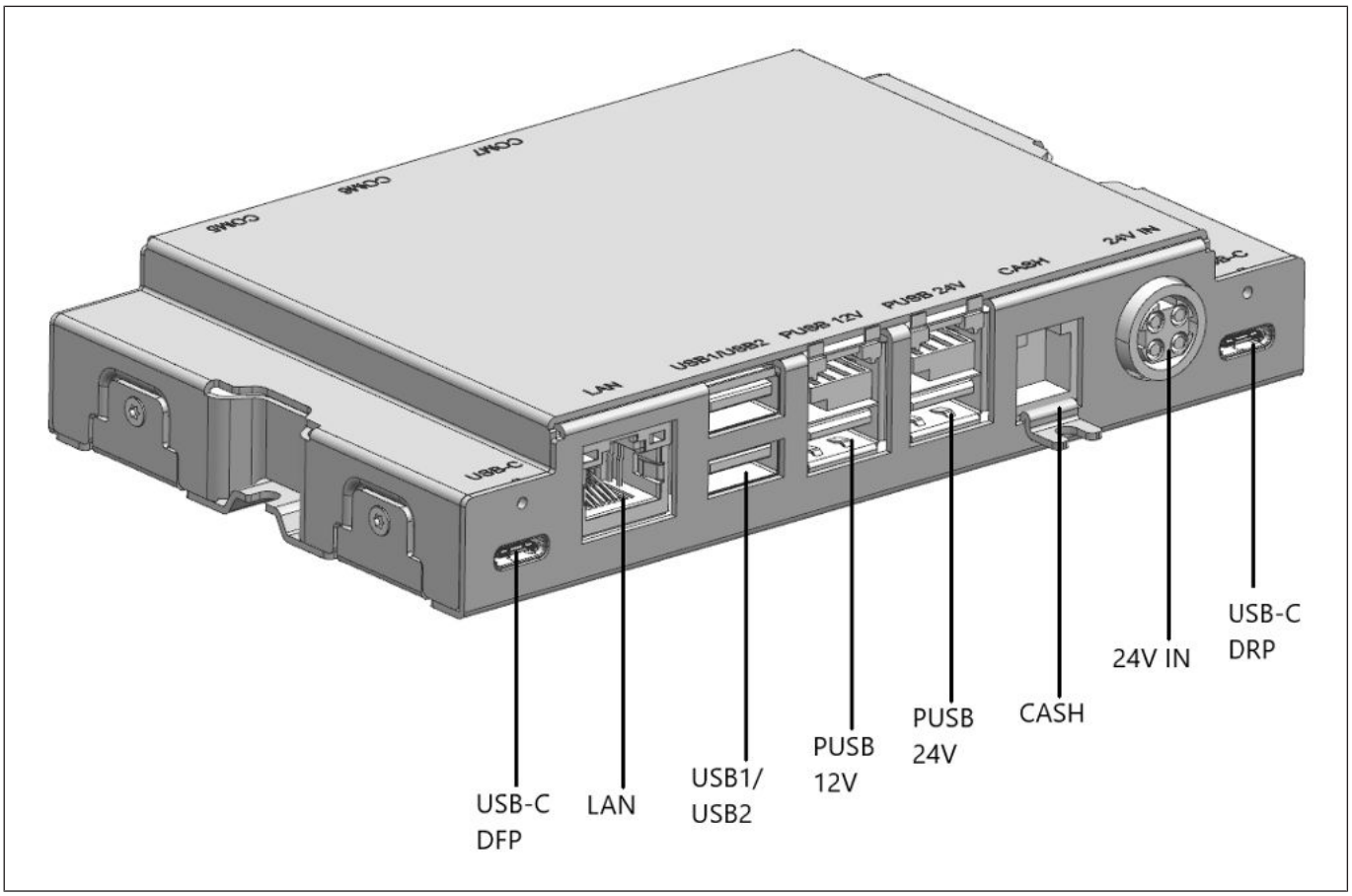

Figure 18-1: I/O Hub – front view

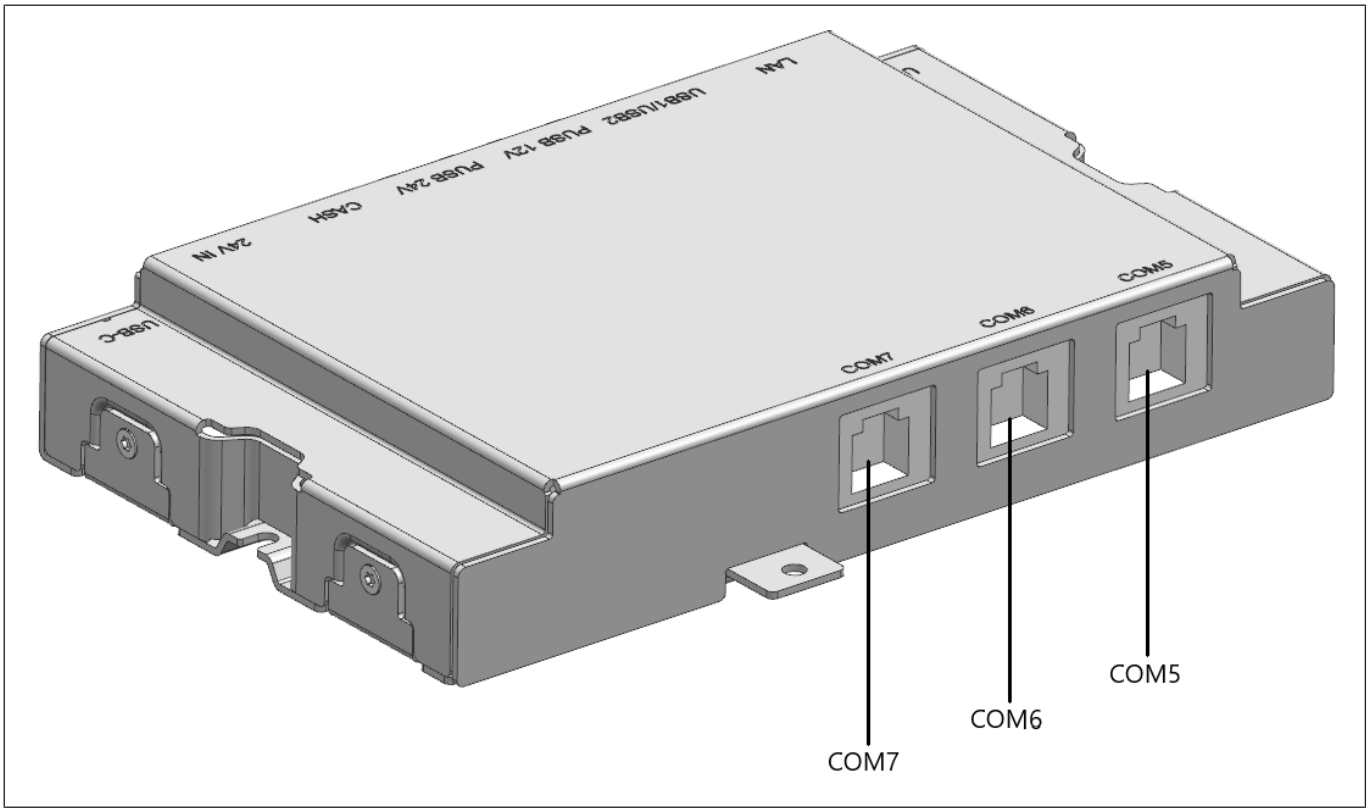

Figure 18-2: I/O Hub – back view

18.3.1 Block Diagram

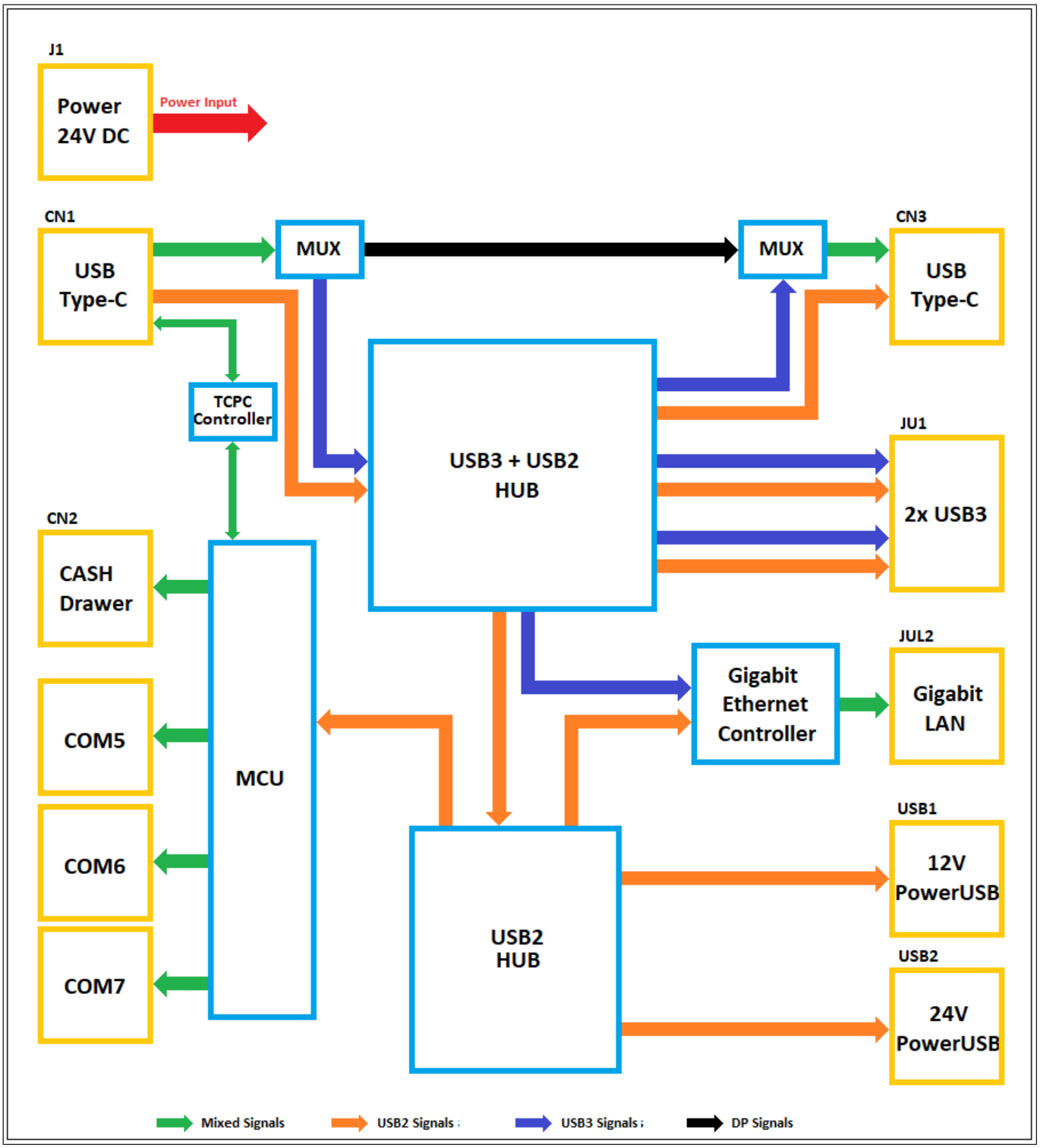

Figure 18-3: Block diagram of I/O Hub

18.4 Total Available Power

The total power available for the external IO ports depends on the rating of AC power adapter used. Below is the Diebold Nixdorf's approved AC power adapter for Beetle A Series.

Part Number	Model Name	Output Rating	Total power available External I/O Ports
1750266555	ADC029-280G	120W	70W

Type	Port Name	Voltage	Current Rating	Max. Total Power Consumption (W)
USB 3.0	USB5	5V	0.5A	Depends on the power adapter used. See above table for the applicable total power available.
	USB6	5V	0.5A	
USB 2.0	USB3	5V	0.5A	
	USB4	5V	0.5A	
USB Type C	USB2	5V	3A	
		12V	3A	
	USB1	5V	3A	
		12V	3A	
		24V	4A	
Powered COM	COM2	5V	0.5A	
		12V	0.5A	
	COM1	5V	0.5A	
		12V	0.5A	

NOTE

Before connecting additional peripherals to these ports, the service engineer or trained technician must check and ensure that the power consumptions of the peripherals do not exceed the maximum output powers of the ports, and that the total power consumption does not exceed the total available power of the selected AC power adapter.

Copyright © 2020, Diebold Nixdorf

19 Appendix

19.1 Approved Printers List

The following are the approved printers that are allowed to be connected to the Beetle A Series +24Vdc Powered USB port:

	Model	Manufacturer
1	TH200i series	Diebold Nixdorf
2	TH210 series	Diebold Nixdorf
3	TH230 series	Diebold Nixdorf
4	TH250 series	Diebold Nixdorf
5	TH320 series	Diebold Nixdorf

WARNING

Connecting printer that are not in the above approved list to the +24Vdc Powered USB port may cause safety hazard and endanger the user and the nearby people. Please consult Diebold Nixdorf if in doubt.

Copyright © 2020, Diebold Nixdorf

Abbreviation Index

CE

European Symbol of Conformity

cUL

Canadian Registration DIN (Recognized by UL)

DIN

Deutsche Industrie Norm (German Institute for Industrial Standards)

DVI-D

Digital Visual Interface Digital

HDD

Hard Disk Drive

IEC

International Electro technical Commission

ISO

International Organization for Standardization

LCD

Liquid Cristal Display

LED

Light Emitting Diode

LVDS

Low Voltage Differential Signal

MSR

Magnetic Stripe card Reader

ODD

Optical Disk Drive

OSD

On Screen Display

POS

Point Of Sales

SSD

Solid State Drive

SVGA

Super Video Graphics Array

TFT

Thin Film Transistor Technology (LCD Technology)

UL

Underwriters Laboratory (standards)

USB

Universal Serial Bus

VDE

Verband Deutscher Elektrotechniker (German Electricians Association)

VESA

Video Electronics Standard Association

VGA

Video Graphics Array

XGA

Extended Graphics Array

Copyright © 2020, Diebold Nixdorf

DIEBOLD NIXDORF
5995 Mayfair Road | North Canton, OH 44720 | United States
© 2020 Diebold Nixdorf, Incorporated. All Rights Reserved.

Diebold Nixdorf