Instruction Manual

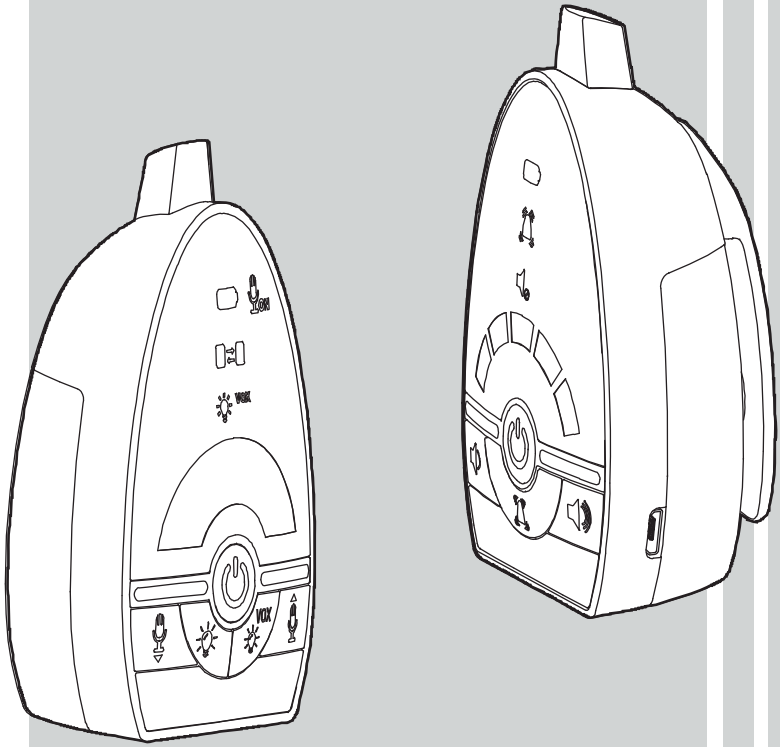

Thank you for purchasing our BC-62 baby monitor. Your unit has been manufactured and checked under the strictest possible quality control to ensure that each monitor leaves the factory in perfect condition. If in the unlikely event you find any defects or have any problem, please contact your dealer, our branch or service center.

Please read this manual carefully to obtain maximum performance & extend - ed service life from the unit.

Features

- Full digital technique operating in the 902.000MHz---928.000MHz with zero interference - Automatic search and hop to free channel
- Operating range of 800m in open space
- Low radiating power (only 8% of normal DECT and 40% of ECO DECT)
- Automatic power reduction system further reduce radiation level to half when baby unit and parent unit are close to each other
- Night light with adjustable intersity on baby's unit
- Audio and visual alert for out-of-range on parent unit
- LED level meter on parent unit
- Low battery warning on both baby and parent unit
- Adjustable microphone sensitivity on baby unit
- Vibration alert on parent unit

WARNING

The BC-62 baby monitor should not be regarded as a medical device. Premature babies or those considered to be at risk should be under the supervision of your doctor or health personnel.

Direct supervision of your baby at a regular interval by a responsible adult is strongly recommended in addition to using the BC-62.

DIGITAL TECHNOLOGY AND APRS

This baby monitor employs full digital technology with zero interference.

The unit can automatically select free channel or hop to free channel during communication to avoid interference from other electronic devices. In addition, thanks to the Automatic Power Reduction System (APRS) which senses the distance between baby and parent unit and automatically reduces the emission power from baby unit when the two units are in close vicinity. The level of radiation to baby is greatly reduced.

POWER SUPPY

(A) Baby Unit

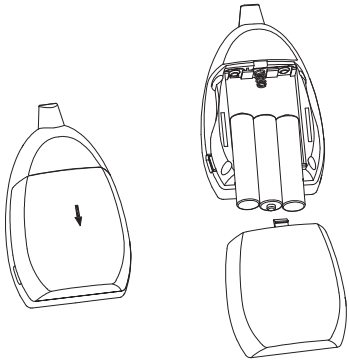

1. Operation from batteries

   Press down the lock button and slide open the battery door in direction as shown.

   Insert three pieces AAA size (UM-4) alkaline batteries into the compartment. Observe correct polarities indication.

N.B. For best performance, do not mix use old and new batteries or alkaline and rechargeable batteries.

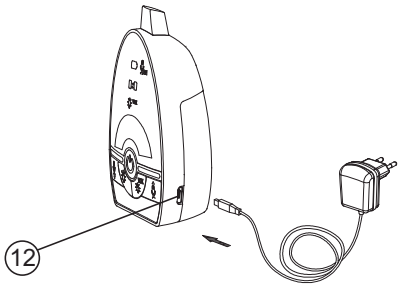

2. Operation using AC adapter

   The baby unit can be operated on AC mains using the supplied 5V AC adapter. Connect the output plug of AC adapter to USB port (12) of the baby unit, make sure the polarity is correct. The battery will be cut off once the AC adapter's output plug is inserted into the USB port (12) .

(B) Parent unit

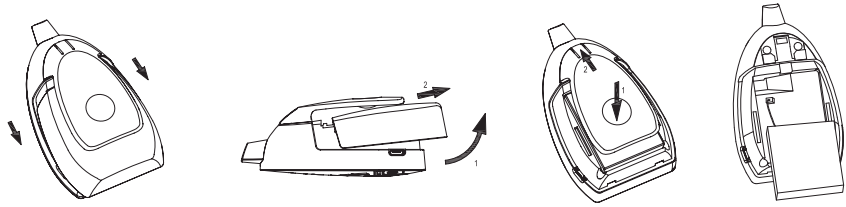

1. Operation from battery pack

   The Li polymer battery pack is already installed in the unit. To exchange battery pack, press and open the battery cover, remove the belt clip in the direction as shown, take out the battery pack and disconnect from socket.

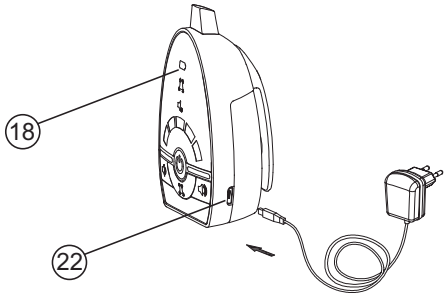

2. Charging up the Lithium rechargable battery

   Connect the output plug of the supplied 5V AC adapter to the USB port (22) of the unit, make sure the polarity is correct. With the parent unit being switched off, the power on icon (18) will start flashing red, indicating the battery is being charged. Once the battery is fully charged up (normally it takes around 3 hours), the indicator (18) turns steady green. Now the parent unit can be switched on for operation. Either you can disconnect the AC adaptor or keep connecting will cause no damage to the battery. In the latter case, when the battery is being consumed and voltage falls to a certain level, the AC adapter will automatically start charging up the battery again.

Note : Before using the parent unit for the first time, charge up the Li battery pack for at least three hours. Besure to switch off the unit before charging.

Even without the Li battery pack being installed, the unit can still operate normally once connecting to the AC adapter, while the power on icon ▬ will always stay steady green.

⚠ CAUTION : BESURE THE BATTERY IN THE PARENT UNIT IS RECHARGEABLE TYPE BEFORE CONNECTING TO AC ADAPTER, OTHERWISE EXPLOSION MAY RESULT.

CONTROLS LAYOUT

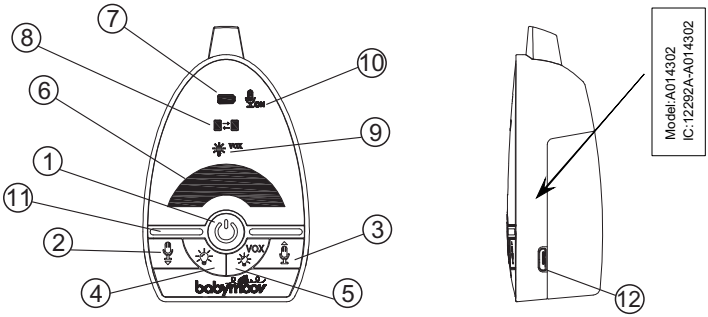

BABY UNIT

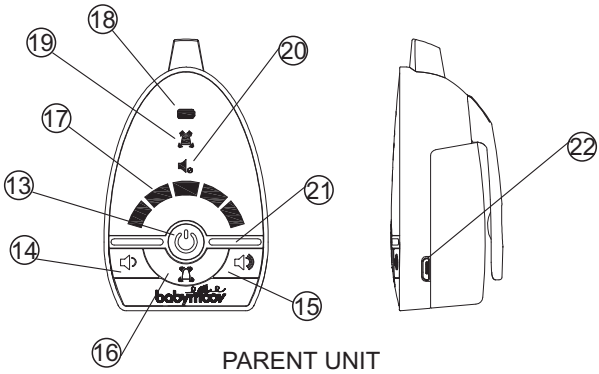

PARENT UNIT

1	Power On/Off button	12	USB port
2	Microphone Sensitivity Down adjustment button	13	Power On/Off button
3	Microhone Sensitivity Up adjustment button	14	Volume down button
4	Night Light intensity adjustment button	15	Volume up button
5	Night Light VOX control button	16	Vibration button
6	Night Light	17	Visual level meter/Out-of-range icon
7	Power On/Battery low icon	18	Power On/Battery Low/Charging icon
8	Transmit icon	19	Vibration icon
9	Night Light VOX icon	20	Speaker mute icon
10	Micophone always ON icon	21	Speaker
11	Microphone	22	USB port

PAIRING

This process is to match the parent unit with baby unit so that they can communicate with each other while no other devices (even baby monitor of identical model) can interfere with you or receiving your signal.

The baby and parent unit are already paired with factory preset code when they are shipped from factory. However, we recommend to perform pairing again in case interference is experienced:

1. First press and hold the button (15) of parent unit.

2. Press the power ON-OFF button (13) and wait until the power on icon (18) starts flashing green. Release both buttons (13) & (15).

3. Now press and hold the button (11) of baby unit.

4. Press the power ON-OFF button (1) and wait until the power on icon (7) starts flashing green. Release both buttons (1) & (11).

5. Now short press the power ON-OFF button (1) of baby unit.

6. If pairing is successful, the power on icons (18) & (7) on both baby & parent unit should stop flashing, at the same time, 2 beep sound will be heard from the parent unit.

7. Long press buttons (1) & (13) to switch off both baby and parent units and then switch them on again, the baby monitor is now ready for operation.

8. In case the baby and parent unit cannot communicate with each other, repeat steps 1 - 7 again.

OPERATION

Baby unit

1. Long press the power ON/OFF button ⏻ (1) for 3 sec to switch on the unit. The power on icon ▬ (7) should light up steady green. To turn off, long press the button ⏻ (1) again.
2. Place the unit about 1 m from the crib with the microphone (11) facing towards the baby.
3. Adjust the microphone sensitivity using the button (2) and button (3) such that the unit will be set to transmit whenever the microphone (11) picks up a sound at your desirable loudness level. The intensity of night light (6) will change during adjustment. The higher the intensity, the more sensitive is the microphone (11) to sound. There are total 5 levels of microphone sensitivity. When the maximum level is reached, further press of the button (3) will set the unit into continuous transmission mode (i.e. the unit will transmit even without detecting a sound) and the ON icon (10) will light up steady green.
4. Once the unit is in transmit mode, the transmit icon (8) will light up green. The unit will return to standby mode a few seconds after the microphone (11) stops picking up any sound and the transmit icon (8) will go off. Except when the unit is set in continuous transmission mode, the transmit icon (8) will stay steady on.
5. The night light (6) can be set permanently ON by pressing the button (4). Each press of button (4) will increase the level of light intensity (maximum 5 levels). The night light (6) can also be set to VOX (voice activated) by pressing VOX button (5). Under VOX mode, the VOX icon (9) will light up and night light (6) will be switched on once the microphone (11) detects a sound and automatically fade off a few seconds after the sound stops.
5. The condition of the battery is shown by the power on/low battery icon ▬ (7). When the battery level becomes running low, the power on/low battery icon ▬ (7) turns red. Replace with new battery or use the supplied AC adapter.

Parent unit

1. Long press the power ON/OFF button ⏻ (13) for 3 sec to switch on the unit. The power on icon ▬ (18) should light up steady green. To turn off, long press the button ⏻ (13) again.
2. Place this unit at a reasonable distance away from the baby unit to avoid feedback. Too close a distance will create a screeching sound at the speaker (21).

3. Once it receives a signal from the baby unit, the visual level meter (17) will light up. The number of segments being lighted up vary along with the sound. This feature is useful in case the parents prefer to turn down the speaker volume to keep the environment quiet.
4. The speaker volume can be adjusted using the button (14) and button (15). Each press of button will change the volume by 1 step which is correspondingly indicated by the visual level meter (17) . There are total 5 volume levels, more segments shown in visual level meter (17) means higher volume. When the volume setting is at minimum, further press of button (14) will cause the speaker (21) to be totally muted with the icon (20) being lighted up.
5. This unit is equipped with a vibration alert. Press the button (16) and the icon (19) will show up. Once the received baby's voice is loud enough, the vibrator starts to function. This feature is useful when the parent is working under noisy environment (e.g. vacuum cleaning). To save battery power, it is recommended not to use the vibration alert frequently. To switch off vibration, press the button (16) again and the icon (19) goes off.
6. Once this unit is beyond the communication range of baby unit for over 30 sec, an out of range alarm will be heard together with segments of the visual level meter (17) flashing to alert the parents. The alarm sound is independent of whether the speaker is muted or not. This alarm will go off only when the parent unit falls back within the communication range of baby unit.

N.B. This alarm will also be heard in case the baby unit is switched off, or its battery has run down, or its power is cut off, or the pairing is not properly done between the baby and parent unit.

7. The condition of the Li battery pack is shown by the power on/low battery icon (18). When battery level becomes running low, the icon (18) turns red and an alarm will be heard, reminding the parents to charge up the battery using the supplied AC adapter.
8. Each time the buttons are pressed, a beep tone will be heard. To eliminate this beep tone, press and hold the button (14) for 2 sec until a second beep tone is heard. To resume the beep tone, press and hold the button (15) for 2 sec until a beep tone is heard. Whenever the unit is switched off and then on again, the beep tone will resume automatically.

PRECAUTIONS

- Use only the supplied AC adapters, use of other adapters may cause damage to the BC-62 baby monitor.
- When not using the monitor for a long period of time, remove all batteries form the PU, BU and movement sensor mat to avoid damage due to battery leakage.
- Disconnect the AC adapter form the wall outlet when the monitor is not to be operated.
- The BC-62 is best performed within a temperature range of -19˚C to +50˚C.
- Do not open the cabinet, no serviceable parts inside.
- The BC-62 should not be exposed to dripping, splashing and that no objects filled with liquids, such as vases shall be placed on it.
- Danger of explosion if battery is incorrectly replaced. Replace only with the same or equivalent.
- Batteries (battery pack or batteries installed) shall not be exposed to excessive heat such as sunshine, fire or the like.
- The MAINS plug of an appliance coupler is used as the disconnect device, the disconnect device shall remain readily operable.
- Only use the power supply unit list in the user manual

STANDARD ACCESSORIES

a. 5V AC adapter x 2
b. Baby unit
c. Parent unit
d. 3.7V Li Polymer rechargeable battery pack (installed in parent unit)
e. User manual

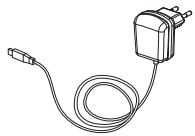

a

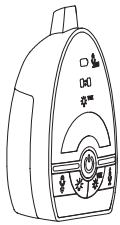

b

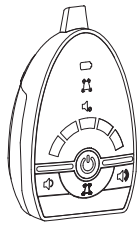

c

Manufacturer:BABYMOOV ALT PARTNERS
Product Name:Digital Baby Monitor
Model No:A014302

CE0890

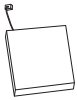

d

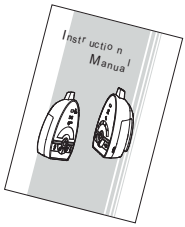

e

TROUBLE SHOOTING GUIDE

PROBLEM	POSSIBLE CAUSE	SOLUTION
Baby Unit has no Transmission	- Mic sensitivity is too low - Battery has run down or AC adapter improperly connected	- Adjust mic sensitivity higher using button ③ - Replace with new battery or check connection
Transmission always on	- Mic Sensitivity is too high - Unit is set to continuous transmission mode	- Adjust mic sensitivity lower using button ② - Set the unit to become voice activated
Out-of-range alarm always on	- Baby unit's battery has run down - Distance between baby and parent unit exceeds the operating range - Pairing is not successful	- Replace with new battery or use AC adapter - Move the baby & parent unit closer together - Perform pairing again
Always showing low battery alert	- Battery has run down - Battery pack is damaged	- Recharge battery using AC adapter (parent unit) - Replace with new battery or use AC adapter (baby unit) - Replace with new battery pack
Battery life is short	- Night light is permanently switched on - Vibration alert is switched on	- Switch off night light or set to VOX operate - Switch off vibration alert
Communication frequently Interrupted	- Baby unit is located near other electrical appliances	- Remove the electrical appliances or re-locate the baby unit far away from source of interference or perform pairing again.
Too short Communication range	- Many steel structures between baby & parent unit - Baby unit battery has run down	- Re-locate baby or parent unit - Replace with new battery or use AC adapter

All European Countries except Austria, Georgia, Greece, Norway, Russian, Federation, Spain, Sweden, The Netheriands, Ukaine.

ENGLISH

Warning: Changes or modifications to this unit not expressly approved by the party responsible for compliance could void the user's authority to operate the equipment.

NOTE: This equipment has been tested and found to comply with the limits for a Class B digital device, pursuant to Part 15 of the FCC Rules. These limits are designed to provide reasonable protection against harmful interference in a residential installation.

This equipment generates, uses and can radiate radio frequency energy and, if not installed and used in accordance with the instructions, may cause harmful interference to radio communications. However, there is no guarantee that interference will not occur in a particular installation. If this equipment does cause harmful interference to radio or television reception, which can be determined by turning the equipment off and on, the user is encouraged to try to correct the interference by one or more of the following measures:

- Reorient or relocate the receiving antenna.
- Increase the separation between the equipment and receiver.
- Connect the equipment into an outlet on a circuit different from that to which the receiver is connected.
- Consult the dealer or an experienced radio/TV technician for help.

This device complies with Part 15 of the FCC Rules/Industry Canada licence-exempt RSS standard(s). Operation is subject to the following two conditions: (1) this device may not cause harmful interference, and (2) this device must accept any interference received, including interference that may cause undesired operation of the device.

WARNING! Strangulation hazard! Keep cords out of the reach of children (more than 0.9 m/2.9 feet away) due to risk of strangulation.

FCC

Caution: The user is cautioned that changes or modifications not expressly approved by the party responsible for compliance could void the user's authority to operate the equipment.

NOTE: This equipment has been tested and found to comply with the limits for a Class B digital device, pursuant to Part 15 of the FCC Rules. These limits are designed to provide reasonable protection against harmful interference in a residential installation. This equipment generates, uses and can radiate radio frequency energy and, if not installed and used in accordance with the instructions, may cause harmful interference to radio communications However, there is no guarantee that interference will not occur in a particular installation.
If this equipment does cause harmful interference to radio or television reception, which can be determined by turning the equipment off and on, the user is encouraged to try to correct the interference by one or more of the following measures:

-- Reorient or relocate the receiving antenna.

-- Increase the separation between the equipment and receiver.

-- Connect the equipment into an outlet on a circuit different from that to which the receiver is connected.

-- Consult the dealer or an experienced radio/TV technician for help.

IC:

This device complies with Industry Canada licence-exempt RSS standard(s). Operation is subject to the following two conditions:

(1) this device may not cause interference, and

(2) this device must accept any interference, including interference that may cause undesired operation of the device.

Le présent appareil est conforme aux CNR d'Industrie Canada applicables aux appareils radio exempts de licence. L'exploitation est autorisée aux deux conditions suivantes :

(1) l'appareil ne doit pas produire de brouillage, et

(2) l'utilisateur de l'appareil doit accepter tout brouillage radioélectrique subi, même si le brouillage est susceptible d'en compromettre le fonctionnement.