logia™

7-IN-1 WIRELESS WEATHER STATION

LOWSC710B

QUESTIONS OR PROBLEMS? CONTACT US!

Email: info@supportcbp.com or call: 1-833-815-0568
www.logiaweatherstation.com

Thank you for purchasing the **Logia 7-in-1 Wireless Weather Station.** This User Guide is intended to provide you with guidelines to ensure that operation of this product is safe and does not pose risk to the user. Any use that does not conform to the guidelines described in this User Guide may void the limited warranty.

Please read all directions before using the product and retain this guide for reference. This product is intended for household use only. It is not intended for commercial use.

This product is covered by a limited one-year warranty. Coverage is subject to limits and exclusions. See warranty for details.

TABLE OF CONTENTS

SAFETY PRECAUTIONS ..... 2 – 3

WARNINGS 3

PRODUCT FEATURES 4

PACKAGE CONTENTS 4

PRODUCT OVERVIEW ..... 5 – 7

INSTALLATION INSTRUCTIONS ..... 8 – 10

OPERATING INSTRUCTIONS ..... 11 – 24

CARE/MAINTENANCE ..... 24 – 25

COMPATIBLE DEVICES 26

TROUBLESHOOTING 26

SPECIFICATIONS ..... 27 – 29

WARRANTY ..... 30 – 31

SAFETY PRECAUTIONS

WARNING! Please read and understand all safety precautions, operating instructions, and care/maintenance instructions before operating this appliance. Keep this manual for future reference.

- This product is not a toy. Keep out of the reach of children.
- This product is designed for use in the home only as an indication of weather conditions. This product is not to be used for medical purposes or for public information.
- Do not clean the unit with abrasive or corrosive materials.
- Do not place the appliance near open flames or heat sources. Fire, electric shock, product damage, or injury might occur.
- Only use fresh, new batteries in the product. Do not mix new and old batteries together.

SAFETY PRECAUTIONS

- Do not disassemble, alter, or modify the product.
- Only use attachments or accessories with this product specified by the manufacturer.
- Do not submerge the unit in water. Dry the product with a soft cloth if liquid spills on it.
- Do not subject the unit to excessive force, shock, dust, extreme temperature, or humidity.
- Do not cover or block the ventilation holes with any objects.
- The console of this product is intended to be used indoors only.
- This product is only suitable for mounting at height less than 6.6 ft. (2 m).
- Do not tamper with the unit's internal components. Tampering with the product will void the warranty.
- Batteries are not included. When inserting batteries, make sure that the positive and negative polarities match with the markings in the compartment.
- Do not mix standard, alkaline, and rechargeable batteries together.
- Leaving a battery exposed to extremely high temperature in the surrounding environment can result in an explosion or leakage of flammable liquid or gas.
- Leaving a battery exposed to extremely low air pressure in the surrounding environment can result in an explosion or leakage of flammable liquid or gas.

WARNINGS

1. Non-rechargeable batteries are not to be recharged.
2. Do not force discharge, recharge, disassemble, heat above (manufacturer's specified temperature rating) or incinerate. Doing so may result in injury due to venting, leakage or explosion resulting in chemical burns.
3. Ensure the batteries are installed correctly according to polarity (+ and -).
4. Do not mix old and new batteries, different brands or types of batteries, such as alkaline, carbon-zinc, or rechargeable batteries.
5. Remove and immediately recycle or dispose of batteries from equipment not used for an extended period of time according to local regulations.
6. Always completely secure the battery compartment. If the battery compartment does not close securely, stop using the product, remove the batteries, and keep them away from children.

⚠ WARNING

- **INGESTION HAZARD:** This product contains a button cell or coin battery.
- **DEATH** or serious injury can occur if ingested.
- A swallowed button cell or coin battery can cause Internal Chemical Burns in as little as 2 hours.
- **KEEP** new and used batteries **OUT OF REACH of CHILDREN**
- **Seek immediate medical attention** if a battery is suspected to be swallowed or inserted inside any part of the body.

PRODUCT FEATURES

- Wireless 7-in-1 weather sensor measures wind speed, wind direction, rainfall, UV index, light intensity, temperature, and humidity.
- No calibration needed! The product is fully pre-calibrated and mostly assembled; all you need to do is install it and sync with the included display console.
- Provides precise weather and environmental information directly from your own backyard, instead of relying on a national weather station.
- Color LCD display with dimmable backlight.
- Can alert you to excessively high/low indoor or outdoor temperatures or humidity, high wind speeds, extreme drops in barometric pressure, high heat indexes, low wind chills, and high/low dew points.

PACKAGE CONTENTS

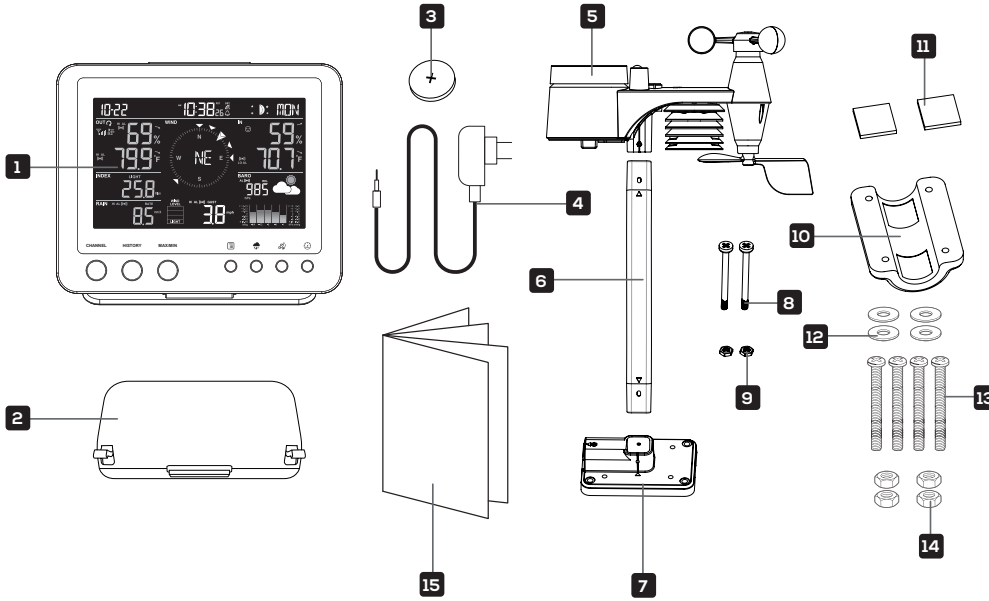

1. Weather display console
2. Detachable kickstand
3. Console CR2032 battery
4. Console power adapter
5. 7-in-1 outdoor weather sensor
6. Mounting pole
7. Mounting base
8. 2 x screws (for pole)
9. 2 x hexagonal nuts (for pole)
10. Mounting clamp
11. Rubber pads
12. 4 x washers (for clamp)
13. 4 x screws (for clamp)
14. 4 x hexagonal nuts (for clamp)
15. User guide

PRODUCT OVERVIEW

WEATHER CONSOLE OVERVIEW

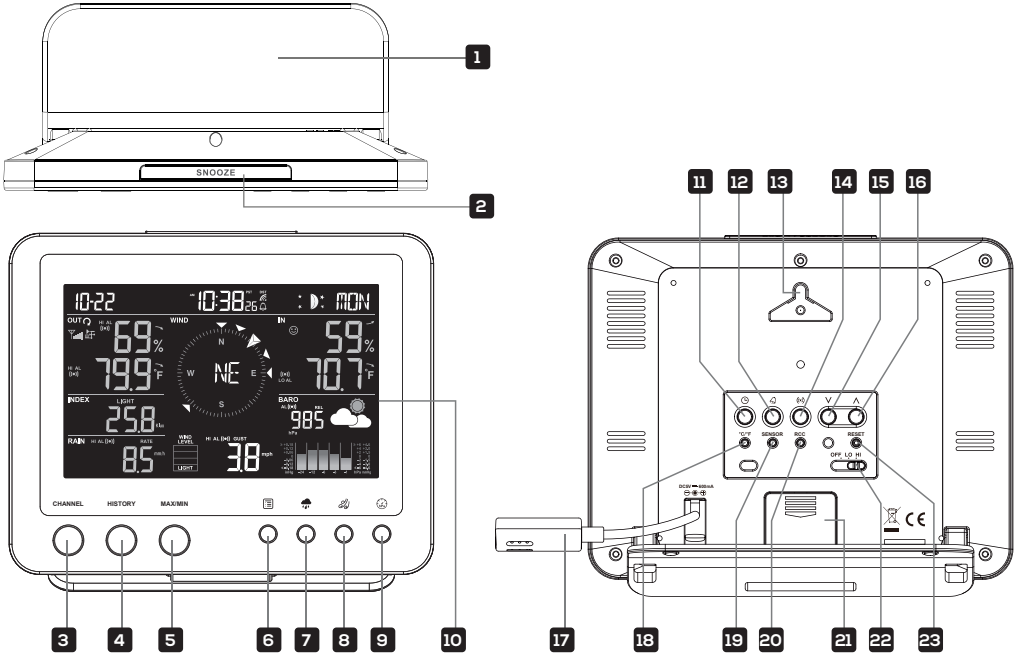

1. Detachable kickstand
2. SNOOZE button
3. CHANNEL button
4. HISTORY button
5. MAX/MIN button
6. INDEX button
7. RAIN button
8. WIND button
9. BARO button
10. LCD display
11. CLOCK button
12. ALARM button
13. Wall mounting holder
14. ALERT button
15. DOWN button
16. UP button
17. Power cord
18. °C/°F button
19. SENSOR button
20. RCC button
21. Battery compartment
22. OFF/LO/HI slider
23. RESET button

LCD DISPLAY OVERVIEW

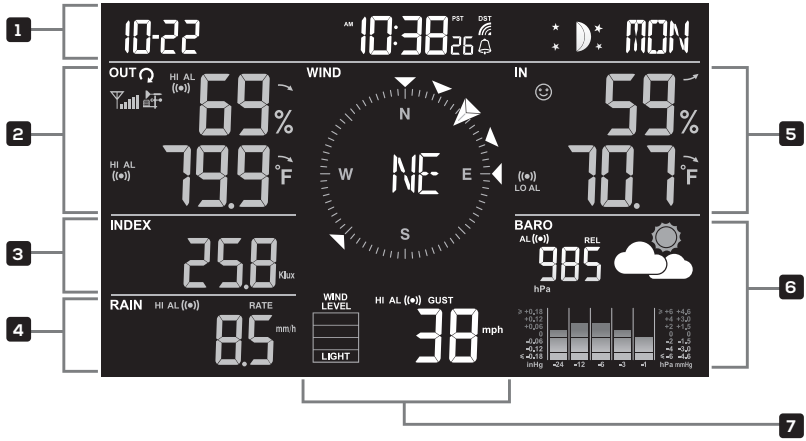

1. Time & date, moon phase
2. Outdoor temperature & humidity
3. UV index & light intensity
4. Rainfall & rain rate
5. Indoor temperature & humidity
6. Barometer, weather forecast
7. Wind direction & speed

OUTDOOR WEATHER SENSOR OVERVIEW

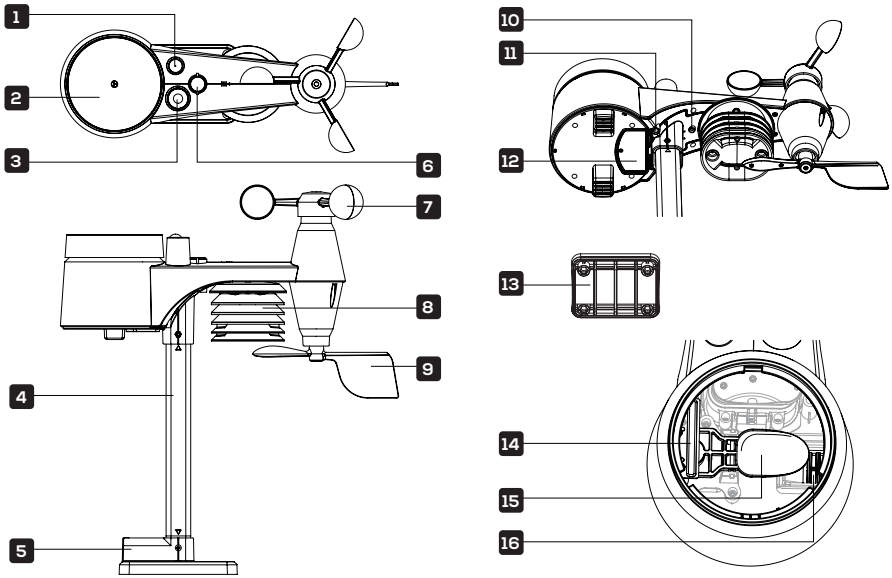

1. Antenna
2. Rain collector
3. UVI/light sensor
4. Mounting pole
5. Mounting base
6. Balance indicator
7. Wind cup
8. Radiation shield
9. Wind vane
10. Red LED indicator
11. RESET button
12. Battery compartment
13. Mounting clamp
14. Rain sensor
15. Tipping bucket
16. Drain holes

SETTING UP THE WIRELESS 7-IN-1 OUTDOOR SENSOR

The wireless 7-in-1 outdoor sensor measures wind speed, wind direction, rainfall, UV, light intensity, temperature, and humidity for you.

Installing the Batteries

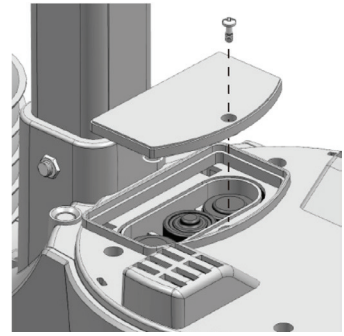

1. Unscrew the battery door at the bottom of the 7-in-1 outdoor sensor.
2. Insert three (3) AA batteries (not included) according to the +/- polarity labeled in the compartment.
3. Screw the battery door back onto the compartment.

NOTE: The LED light will flash red every 12 seconds.

Mounting the Sensor on Pole

1. Pick a location for the 7-in-1 outdoor sensor that's open with no obstructions.
2. Place the outdoor sensor over the top side of the mounting pole (included). Make sure the square holes are aligned with each other.

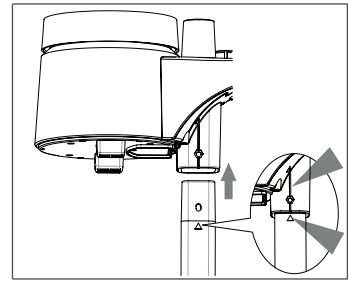

3. Insert the screw through the holes of the sensor and pole then tighten the hexagonal nut onto the other end of the screw. Use a screwdriver or wrench if needed.

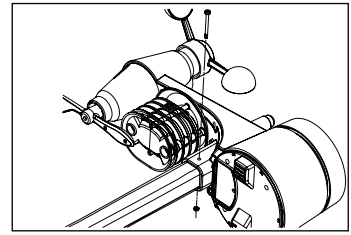

4. Insert the bottom side of the pole into the mounting base (included). Make sure the square holes are aligned with each other.

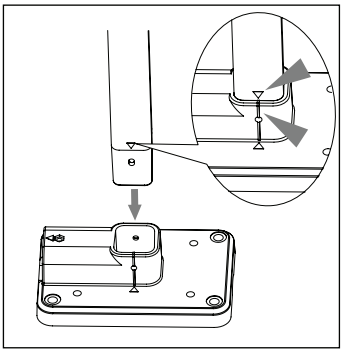

5. Insert the screw through the holes of the pole and base then tighten the hexagonal nut onto the other end of the screw. Use a screwdriver or wrench if needed.

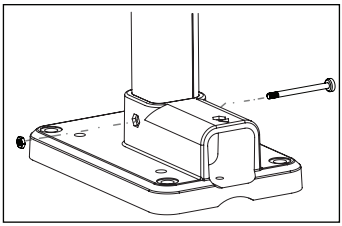

6. Add rubber pads onto mounting clamp before fastening the mounting clamp on the mounting base.
7. Place the mounting base onto a post and place the mounting clamp on the other side of the post.
8. Align the holes of the mounting base and mounting clamp, then tighten the two together using four (4) included screws, washers, and hexagonal nuts.

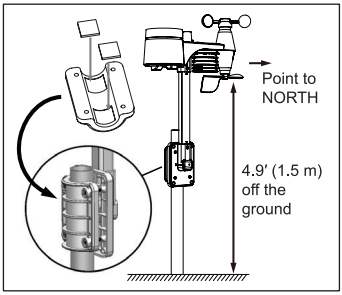

NOTES: Place the mounting base and clamp on a steel pole or post with a 1″ – 1.3″ (25 – 33 mm) diameter and is a minimum of 4.9′ (1.5 m) off the ground.

When setting up the outdoor sensor, make sure the wind pane side is facing north.

When placing the outdoor sensor, make sure it is within 492′ (150 m) of the display console.

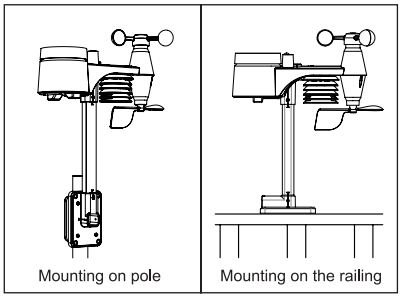

SETTING UP THE DISPLAY CONSOLE

Installing the Batteries

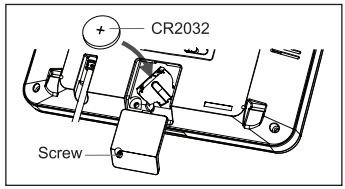

1. Unscrew and remove the battery door on back of the console.
2. Insert a CR2032 battery (included) into the compartment.
3. Place the battery door back onto the compartment and screw it in place.

NOTE: If nothing appears on the display after inserting the battery, then press the RESET button using a pin.

Powering Up the Console

1. Connect the power adapter to the integrated power cord of the console.
2. Once the console is turned on, the segments on the LCD display will light up.

NOTE: The radio-controlled clock will automatically start scanning for the radio-controlled time signal in eight (8) seconds.

Pairing the Console with the Wireless 7-in-1 Sensor

1. Once your display console powers on, it should automatically search for and connect to the wireless weather sensor. If the console does not connect within the first 15 minutes, refer to the following section, Changing Batteries and Manual Pairing of Sensor, for instructions on manual pairing.
2. Once the pairing process is complete, the antenna icon will appear solid (not blinking), and the readings for outdoor temperature, humidity, wind speed, wind direction, UV, light intensity, and rainfall will appear in their designated sections of the LCD display.

Changing Batteries and Manual Pairing of Sensor

Whenever you change the batteries of the wireless 7-in-1 sensor, pairing must be done manually.

1. Change all the batteries to new ones.
2. Press SENSOR button on the console to enter pairing mode.
3. Press RESET button on the sensor to acquire a new code for pairing.

Installing the Kickstand

- Connect the kickstand to the display console before placing the console on a flat surface.

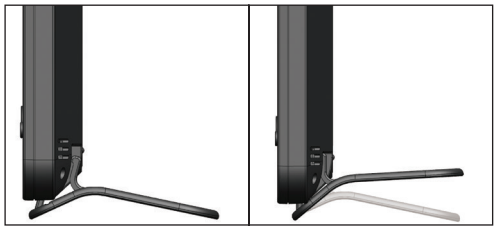

OPERATING INSTRUCTIONS

TIME & CALENDAR

When the unit receives a RCC (radio-controlled clock) signal, a sync-time symbol will appear on the LCD, and the unit will synchronize daily. Flashing wave segments on the sync-time symbol means RCC signals are being received. Every day the unit will automatically search for the time signal at 2:00 a.m., 8:00 a.m., 2:00 p.m., and 8:00 p.m. Make sure to place the unit away from sources like TV sets and computers to prevent interference.

Manually Setting the Time

The display console is designed to synchronize itself using the RCC signal, however you can set the time manually if needed. During initial setup, you will need to press and hold the RCC button for eight (8) seconds to deactivate the RCC reception. Press and hold the RCC button again for eight (8) seconds to turn the signal back on.

1. To manually set clock, press and hold the CLOCK button for two (2) seconds after deactivating the RCC reception and the 12/24 hr. symbol will begin to flash.
2. Press the UP or DOWN button to adjust the time zone.
3. Press the CLOCK button again to proceed to the next setting.
4. Settings will cycle through the following options: Time Zone > Hour > Minute > Second > Year > Month > Day > Hour offset > Weekday language > DST AUTO/OFF.
5. Press the CLOCK button one final time after adjusting all settings options to save and exit, or the console will automatically save and exit the menu after 60 seconds of no button presses.

NOTES: DST (daylight saving time) feature is only valid when the RCC function is on.

The DST feature is set to AUTO by default.

During RCC signal reception, the display backlight would automatically be set to a dim level.

Setting the Alarm Time

If you'd like to use your display console as an alarm clock, follow these instructions to set the alarm time:

1. In normal operating mode, press and hold the ALARM button for two (2) seconds until the alarm hour starts flashing. This indicates that you have entered the alarm time setting mode.
2. Press the UP or DOWN button to adjust the alarm hour. Press and hold either button to move through the hours quickly.

3. Press the ALARM button again to confirm the alarm hour and move to adjusting the minutes. The minute digits should be flashing.
4. Press the UP or DOWN button to adjust the alarm minute. Press and hold either button to move through the minutes quickly.
5. Press the ALARM button to save and exit the menu.

NOTES: Once you have an alarm set, the alarm icon will be displayed next to the time on the LCD display.

The alarm function will be activated automatically once you set a time.

Activating/Deactivating the Alarm & Temperature Pre-Alarm

The temperature pre-alarm will alert you 30 minutes prior to your alarm time whenever the outdoor temperature falls below 26.5 °F (-3 °C).

1. In normal operating mode, press the ALARM button to display the set alarm time for five (5) seconds.
2. When the alarm time is being shown on the LCD display, press the ALARM button again to cycle through the alarm functions (Alarm off/Alarm on/Temperature Pre-alarm) as shown below. The corresponding icons will appear on the LCD display.

Alarm off	**Alarm on**	**Alarm with ice-alert**

3. To stop the alarm:
   a. Allow the alarm to continue for two minutes and it will stop itself automatically. It will remain set for the following day.
   b. Press the SNOOZE button on top of the unit to snooze the alarm for five minutes. The snooze can be set continuously for 24 hours. While the console is in snooze mode, the alarm icon will continue flashing.
   c. Press and hold the SNOOZE button for two (2) seconds or press the ALARM button to stop the alarm completely. It will stay set for the following day.

NOTES: The SNOOZE button could be used continuously in 24 hours.

During the snooze mode, the alarm icon will keep flashing.

TEMPERATURE

Outdoor Temp & Humidity Display

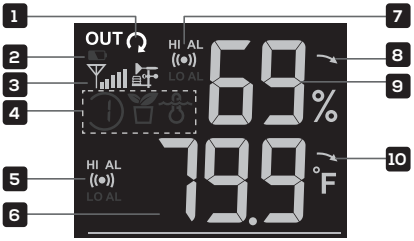

1. Auto loop indicator
2. Low battery indicator
3. Signal strength indicator
4. CH indicator and sensor indicator
5. Temperature alert indicator
6. Temperature reading
7. Humidity alert indicator
8. Humidity trend
9. Humidity reading
10. Temperature trend

Indoor Temp & Humidity Display

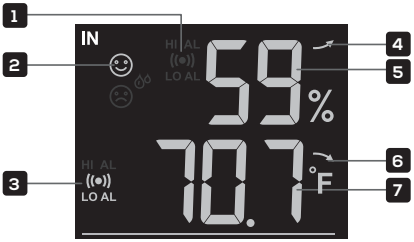

1. Humidity alert indicator
2. Comfort indication
3. Temperature alert indicator
4. Humidity trend
5. Humidity reading
6. Temperature trend
7. Temperature reading

Trend Indicator

Press the °C/°F button to switch between Celsius and Fahrenheit temperature measurements. The arrows show the trend in changes to the temperature/humidity levels.

Arrow Icon	↗	→	↘
Temp/Humidity Trend	Rising	Steady	Falling

Indoor Comfort Indicator

The indoor comfort indicators display a pictorial representation based on the indoor air temperature and humidity levels to determine the approximate comfort level.

☹	☺	💧☹
Too cold	Comfortable	Too hot

NOTE: Comfort indicator levels may vary even when the temperature is the same due to variances in relative humidity levels. No comfort indicator will be displayed if the temperature falls below 32 °F (0 °C) or over 140 °F (60 °C).

Viewing the Other Channels

This console is capable of pairing with the wireless weather sensor and up to three (3) additional wireless hydro-thermo sensors. If you have two (2) or more sensors installed, press the CHANNEL button to cycle between different wireless channels in normal operating mode, or press and hold the CHANNEL button for two (2) seconds to toggle auto-cycle mode on, which cycles through all connected channels at 4-second intervals. While the console is in auto-cycle mode ↻, you can press the CHANNEL button once to toggle auto-cycle mode off and continue displaying the current channel.

BAROMETRIC PRESSURE & WEATHER FORECAST

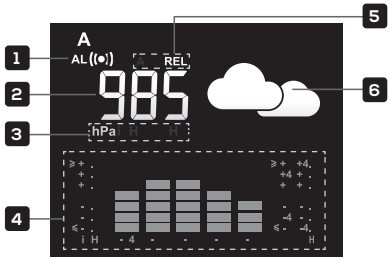

1. Barometric pressure alert indicator
2. Barometric pressure reading
3. Unit of measure
4. Group of barometric pressure
5. Absolute/relative pressure indicator
6. Weather forecast icon

Weather Forecast

The built-in barometer can notice atmospheric pressure changes, and based on the data collected, can predict the weather conditions in the forthcoming 12-24 hours within a 19 ~ 31-mile (30 ~ 50 km) radius. View the chart below to see what each weather icon means.

Sunny	Partly cloudy	Cloudy	Rainy	Rainy / Stormy	Snowy

NOTES: The accuracy of a general pressure-based forecast is about 70% - 75%. Forecasts are not guaranteed.

The forecast section reflects a general prediction for the next 12 hours. It may not necessarily reflect the current situation.

The weather icon will flash on display when a rainstorm is incoming.

The SNOWY weather forecast is not based on the atmospheric pressure but based on the current outdoor temperature reading from the wireless sensor. When the outdoor temperature is below ~ 26 °F (-3 °C), the SNOWY weather indicator will be shown on the LCD display.

Select the Barometric Pressure Display Mode

Press the BARO button to select between ABS and REL mode:

- ABS is absolute atmospheric pressure of your location.
- REL is relative atmospheric pressure based on the sea.

Select the Measurement Unit for the Barometer and Set Relative Pressure Value

1. Press and hold the BARO button for two (2) seconds to enter the unit setting mode.
2. Press the UP or DOWN button to change the unit between inHg/mmHg/hPa.
3. Press the BARO button again to enter the relative pressure value setting mode.
4. Press the UP or DOWN button to change the relative pressure value.
5. Press the BARO button to save settings and go back to ABS or REL mode that you selected before.

NOTES: When powering up the console, it will display the relative pressure reading and the default value is 1013 hPa (29.91 inHg), which refers to the average atmosphere pressure.

When you change the relative atmospheric pressure value, the weather indicators will change along with it.

RAIN

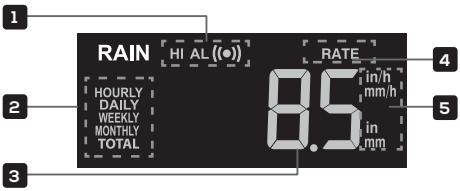

1. Rain alert indicator
2. Rainfall reading indicator
3. Reading
4. Rain rate indicator
5. Unit of measure

Select the Rainfall Display Mode

The device displays how many mm or in of rain are accumulated in an hour, based on current rainfall rate. Press the RAIN button to toggle between:

- RATE: current rainfall rate in the past hour
- HOURLY: total rainfall in the past hour
- DAILY: total rainfall since midnight
- WEEKLY: total rainfall for the current week
- MONTHLY: total rainfall since the beginning of the current month
- TOTAL: total rainfall since the last reset

Set the Rainfall Units

1. Press and hold the RAIN button for two (2) seconds to enter unit setting mode.
2. Press the UP or DOWN button to toggle the units of measure for rainfall between mm and in.
3. Press the RAIN button again to confirm and exit.

Reset the Rainfall Records

While in normal operating mode, press and hold the HISTORY button for eight (8) seconds to reset the rainfall records.

NOTE: To ensure precise data, please reset the rainfall records whenever you move and reinstall your wireless weather sensor to a different location.

WIND

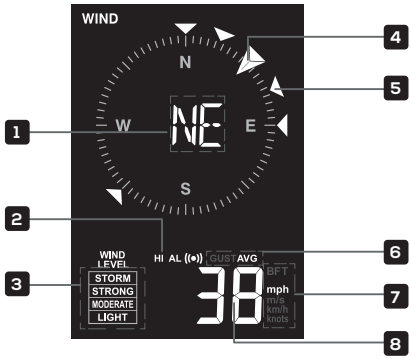

1. Wind direction reading
2. Wind alert indicator
3. Wind speed level
4. Current wind direction indicator
5. Wind direction indicators in last 5 minutes (max 6 indicator marks)
6. Gust or average wind speed indicator
7. BFT and Wind speed unit of measure
8. Wind speed reading

Select the Wind Display Mode

While in normal operating mode, press the WIND button to switch between the average wind speed measurement, gust wind speed measurement, and BFT measurement.

- AVERAGE: The AVERAGE wind speed will display the average of all wind speed numbers recorded in the previous 12 seconds.
- GUST: The GUST wind speed will display the highest wind speed recorded from the last reading.
- BFT: The Beaufort scale of current wind speed will be displayed.

Set the Wind Speed Units

1. While in normal operating mode, press and hold the WIND button for two (2) seconds to enter the wind speed unit setting mode.
2. Press the UP or DOWN button to cycle through the wind speed units in the following order: mph > m/s > km/h > knots.
3. Press the WIND button to confirm and return to normal display mode.
4. Press the WIND button while in normal operating mode to enter wind direction display mode.
5. Press the UP or DOWN button to toggle between 360 degrees or 16 direction mode.
6. Press WIND button again to confirm and exit settings.

The wind speed level chart on display provides a quick reference on the current wind condition.

Level	LIGHT	MODERATE	STRONG	STORM
Speed	1 ~ 12 mph	13 ~ 30 mph	31 ~ 55 mph	> 55 mph

Beaufort Scale

Beaufort Scale	Description	Wind Speed	Land Condition
0	Calm	< 1 km/h	Calm. Smoke rises vertically.
		< 1 mph	
		< 1 knots	
		< 0.3 m/s	
1	Light air	1.1 ~ 5km/h	Smoke drift indicates wind direction. Leaves and wind vanes are stationary.
		1 ~ 3 mph	
		1 ~ 3 knots	
		0.3 ~ 1.5 m/s	
2	Light breeze	6 ~ 11 km/h	Wind felt on exposed skin. Leaves rustle. Wind vanes begin to move.
		4 ~ 7 mph	
		4 ~ 6 knots	
		1.6 ~ 3.3 m/s	

3	Gentle breeze	12 ~ 19 km/h 8 ~ 12 mph 7 ~ 10 knots 3.4 ~ 5.4 m/s	Leaves and small twigs constantly moving, Light flags extended.
4	Moderate breeze	20 ~ 28 km/h 13 ~ 17 mph 11 ~ 16 knots 5.5 ~ 7.9 m/s	Dust and loose paper raised. Small branches begin to move.
5	Fresh breeze	29 ~ 38 km/h 18 ~ 24 mph 17 ~ 21 knots 8.0 ~ 10.7 m/s	Branches of a moderate size move. Small trees in leaf begin to sway.
6	Strong breeze	39 ~ 49 km/h 25 ~ 30 mph 22 ~ 27 knots 10.8 ~ 13.8 m/s	Large branches in motion. Whistling heard in overhead wires. Umbrella use becomes difficult. Empty plastic bins tip over.
7	High wind	50 ~ 61 km/h 31 ~ 38 mph 28 ~ 33 knots 13.9 ~ 17.1 m/s	Whole trees in motion. Effort needed to walk against the wind.
8	Gale	62 ~ 74 km/h 39 ~ 46 mph 34 ~ 40 knots 17.2 ~ 20.7 m/s	Some twigs broken from trees. Cars veer on road. Progress on foot is seriously impeded
9	Strong gale	75 ~ 88 km/h 47 ~ 54 mph 41 ~ 47 knots 20.8 ~ 24.4 m/s	Some branches break off trees, and some small trees blow over. Construction / temporary signs and barricades blow over.
10	Storm	89 ~ 102 km/h 55 ~ 63 mph 48 ~ 55 knots 24.5 ~ 28.4 m/s	Trees are broken off or uprooted, structural damage likely.
11	Violent storm	103 ~ 117 km/h 64 ~ 73 mph 56 ~ 63 knots 28.5 ~ 32.6 m/s	Widespread vegetation and structural damage likely.
12	Hurricane force	≥ 118 km/h ≥ 74 mph ≥ 64 knots ≥ 32.7 m/s	Severe widespread damage to vegetation and structures. Debris and unsecured objects are hurled about.

SUN AND WEATHER

1. Index indicator
2. Reading
3. UV index & light indicator
4. Unit of measure

Weather Indexes

When reading the Weather Index display, you can press the INDEX button to cycle through different weather indexes in the following order: UV Index > Light Intensity > Feels Like > Wind Chill > Heat Index > Dewpoint.

UV Index Mode

UV index shows the current UV index detected by the outdoor sensor.

Light Intensity

1. When the reading is showing, press and hold the INDEX button for two (2) seconds to enter unit setting mode.
2. Press the UP or DOWN button to change the unit in sequence: Klux → Kfc → W/m^2.
3. Press the INDEX button to confirm and exit the setting.

NOTE: The light intensity function is for sunlight detection.

Feels Like

The Feels Like temperature index determines what temperature it actually feels like outside, taking into account factors like wind chill and the heat index.

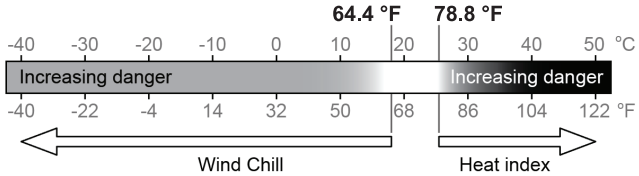

Heat Index

The heat index is determined by the wireless weather sensor's temperature and humidity readings when the temperature outdoors is between 80 °F (27 °C) and 120 °F (50 °C).

Heat Index Range	Warning	Explanation
81 °F – 90 °F (27 °C – 32 °C)	Caution	Possibility of heat exhaustion
91 °F – 104 °F (33 °C – 40 °C)	Extreme caution	Possibility of heat dehydration
106 °F – 129 °F (41 °C – 54 °C)	Danger	Heat exhaustion highly likely
≥ 131 °F (≥ 55 °C)	Extreme danger	Strong risk of dehydration/ heatstroke

Wind Chill

Wind chill is determined by a combination of the wireless weather sensor's temperature and wind speed data.

Dew Point

The dew point is the temperature below which the water vapor in the air is at a constant barometric pressure condenses into liquid at the same rate at which it evaporates. The condensed water is called dew when it forms on a solid surface.

The dew point temperature is determined by the temperature and humidity data from the wireless weather sensor.

UV Index and Light Intensity Calibration

1. When the UV index reading is showing, press and hold the INDEX button for two (2) seconds to enter the UV calibration mode.
2. Press the UP or DOWN button to adjust the UV gain value. (Default is 1.0)
3. Press the INDEX button again to enter the light intensity calibration mode.
4. Press the UP or DOWN button to adjust the light intensity gain value. (Default is 1.0)
5. Press the INDEX button to exit calibration.

HISTORY

History Data for Past 24 Hours

The display console automatically stores the weather data from the past 24 hours.

1. Press the HISTORY button to check past 1 hour history records.
2. Press the HISTORY button repeatedly to show past 2, 3, 4, 5, and onward up to 24th hour of weather history records.

MAX/MIN

MAX/MIN Data Record

The display console can record the accumulated and daily MAX/MIN weather data with a corresponding time stamp for you to review.

To View the Accumulated MAX/MIN

While in normal operating mode, press the MAX/MIN button to cycle through the MAX/MIN records.

Records are displayed in the following order when outdoor temperature/humidity is shown:

Indoor MAX temperature > indoor MIN temperature > indoor MAX humidity > indoor MIN humidity > MAX pressure > MIN pressure > outdoor MAX temperature > outdoor MIN temperature > outdoor MAX humidity > outdoor MIN humidity > MAX feels like temperature > MIN feels like temperature > MAX wind chill > MIN wind chill > MAX heat index > MIN heat index > MAX dew point > MIN dew point > MAX average wind speed > MAX gust > MAX rain rate > MAX UV index > MAX light intensity

Records are displayed in the following order when the CH 1, 2, or 3 temperature/humidity is shown:

Indoor MAX temperature > indoor MIN temperature > indoor MAX humidity > indoor MIN humidity > MAX pressure > MIN pressure > CH MAX temperature > CH MIN temperature > CH MAX humidity > CH MIN humidity

Reset the Total MAX/MIN Records

Press and hold the MAX/MIN button for two (2) seconds to reset the MAX/MIN records of the specific weather display section.

WEATHER ALERT

Weather Alert can alert you of certain weather conditions. Once the alert conditions are met, the alarm sound will activate, and an on-screen alert icon and the reading will flash.

View and Set the Alert

1. Press the ALERT button to enter alert mode.

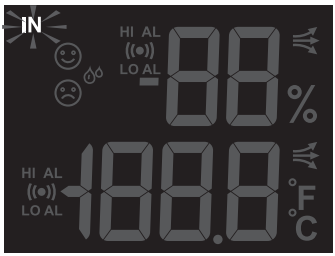

2. Press the UP or DOWN button to select section: Indoor > Outdoor > CH1 > CH2 > CH3.

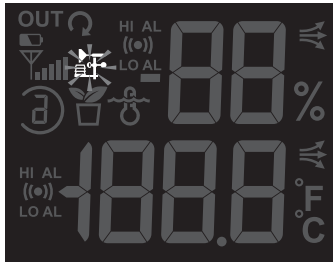

3. Once a section is selected, press the ALERT button to select the alert type
   - When Indoor symbol appears, the selected sequence is: In Temperature HI > In Temperature LO > In Humidity HI > In Humidity LO > Baro Pressure.
   - When Outdoor symbol appears, the selected sequence is: Out Temperature HI > Out Temperature LO > Out Humidity HI > Out Humidity LO > Wind HI > Rain rate HI.
   - When the CH 1, 2, or 3 symbol appears, the select sequence is: CH Temperature HI > CH Temperature LO > CH Humidity HI > CH Humidity LO.

4. In the alert type, the selected value will flash, then press the UP or DOWN button to adjust the value or press and hold the button to change the value rapidly.

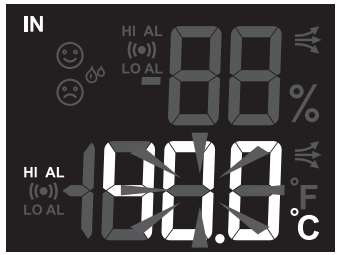

5. Press the ALARM button to toggle the alert on or off.
6. Press the ALERT button to confirm the setting and move to the next alert reading.
7. When finished, press and hold the ALERT button for two (2) seconds to exit the alert setting.

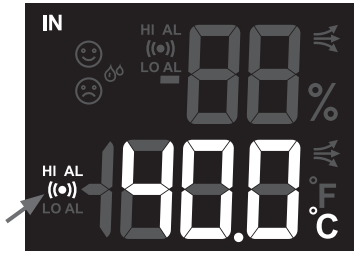

Silence the Weather Alert Alarm

Press the SNOOZE or ALARM button to silence the alarm, or it will automatically turn off after two (2) minutes.

NOTE: Once the alert is triggered, the alarm will sound for two (2) minutes and the associated alert icon and weather readings will flash.

DISPLAY BACKLIGHT

The weather console backlight can be adjusted, using the OFF/LO/HI slider to select the appropriate brightness:

- Slide to the HI position for the brighter backlight.
- Slide to the LO position for the dimmer backlight.
- Slide to the OFF position turn off the backlight.

WIRELESS SIGNAL RECEPTION

The 7-in-1 weather sensor is capable of transmitting data wirelessly over an approximate operating range of 492' (150 m) (with line of sight). Occasionally, due to intermittent physical obstructions or other environmental interference, the signal may be weakened or lost. In the case of the sensor signal getting lost completely, you will need to relocate the console or the weather sensor.

No sensor	Signal searching	Strong signal	Weak signal	Signal lost

POINTING THE 7-IN-1 SENSOR TO THE SOUTH

The outdoor 7-in-1 sensor is calibrated to be pointing to the North by default. However, in some cases, users may wish to install this sensor point to the South:

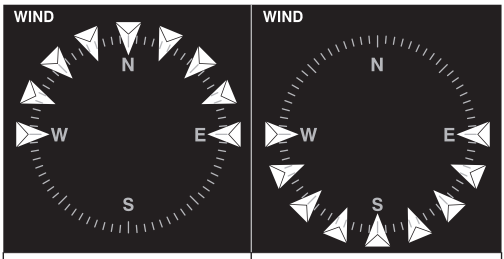

Northern hemisphere	Southern hemisphere

1. Install the outdoor 7-in-1 sensor with its arrow pointing to the South.
2. On the console, press and hold the WIND button for eight (8) seconds until the upper part (Northern Hemisphere) of the compass lights up and blinks.
3. Press the UP or DOWN button to change to lower part (Southern Hemisphere).
4. Press the WIND button to confirm and exit.

MOON PHASE

The sun-lit area of the moon moves from right to left in the Northern Hemisphere, while in the Southern Hemisphere, it moves from left to right. Below is the table which illustrate how the moon will appear on the console.

Northern Hemisphere Icons	Moon Phase	Southern Hemisphere Icons
	New Moon	
	Waxing Crescent Moon	
	First Quarter Moon	
	Waxing Gibbous Moon	
	Full Moon	
	Waning Gibbous Moon	
	Third Quarter Moon	
	Waning Crescent Moon	

CARE/MAINTENANCE

BATTERY REPLACEMENT

If the low battery indicator icon is displayed in the outdoor temperature and humidity section or the corresponding CH section of the LCD console display, this indicates that the batteries in your wireless weather sensor(s) are running low and should be replaced. Make sure to replace all batteries at the same time.

REPLACING THE WIND CUP

1. Remove the rubber cup and unscrew the wind cups.
2. Remove the wind cups for the new replacement.

REPLACING THE WIND VANE

1. Unscrew and remove the wind vane for the new replacement.

CLEANING THE RAIN COLLECTOR

1. Unscrew the rain collector by turning the rain collector counterclockwise.
2. Gently remove the rain collector.

3. Clean and remove any debris or insects from the rain collector.
4. Install the rain collector when it is clean and fully dried.

CLEANING THE UV SENSOR AND CALIBRATION

- For precision UV measurement, gently clean the UV sensor cover lens with a damp micro-fiber cloth.
- Over time, the UV sensor will naturally degrade. The UV sensor can be calibrated with a utility grade UV meter.

CLEANING THE HYGRO-THERMO SENSOR

1. Remove the two (2) screws at the bottom of the radiation shield.
2. Gently remove the shield.
3. Carefully remove any dirt or insects on the sensor fan (do not let the sensors inside get wet).
4. Clean the shield with water to remove any dirt or insects.
5. Install all the parts back when they are clean and fully dried.

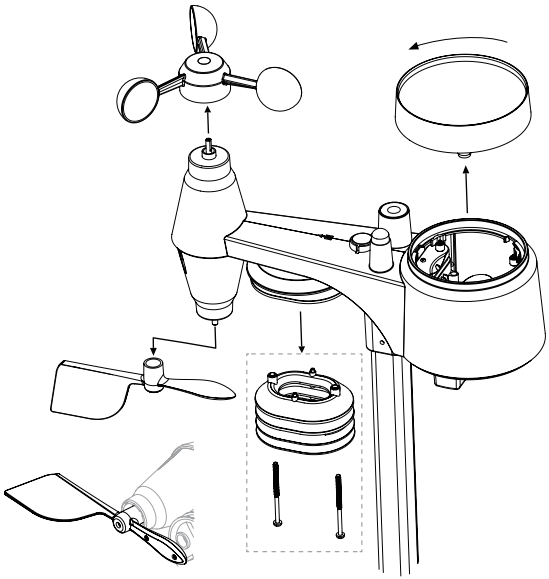

COMPATIBLE DEVICES

The display console of the Logia 7-in-1 Wireless Weather Station can be paired with other add-on sensors like the indoor hygro-thermo sensor and soil moisture and temperature add-on sensor.

Visit **www.logiaweatherstations.com** for the most updated list of compatible Logia add-on sensors.

TROUBLESHOOTING

Problem	**Solution**
No data or measurement coming in from rain sensor.	• Check the drain hole in the rain collector. • Check the balance indicator.
No data or measurement coming in from hygro-thermo sensor.	• Check the radiation shield. • Check the sensor casing.
No data or measurement coming in for wind speed or direction.	• Check the wind cups. • Check the wind vane.
If one of these symbols --.- or Er appear, the signal on your console has been lost.	• Relocate the console and outdoor sensor making sure the two are close together. • Make sure the console is away from other electronic appliances (ex. TVs, computers, microwaves) in your home. • Reset the console and outdoor sensor if problem continues.
Temperature reading is too high in the daytime.	Make sure the sensor is not too close to any heat-generating sources.
Condensation may occur beneath the UV sensor overnight.	This will disappear when temperature rises up under the sun and will not affect the performance of the unit.

SPECIFICATIONS

DISPLAY CONSOLE	
GENERAL SPECIFICATIONS	
Product type:	Weather/environment sensor & console
Dimensions (W x H x D):	6.6" x 5.4" x 0.9" (168 x 136 x 24 mm) (without kickstand)
Weight:	0.8 lbs. (356 g) (with batteries)
Power source:	DC 5 V, 600 mA adapter
Backup battery:	CR2032
Adult assembly required for console:	No
Location use for console:	Indoor use
Additional tools required for console:	Screwdriver
Country of origin:	China
Warranty included:	Yes
Warranty length:	1 year
RADIO-CONTROLLED/ATOMIC CLOCK SPECIFICATIONS	
Synchronization:	Auto or disabled
Clock display:	HH: MM: SS/weekday
Hour format:	12hr (AM/PM) or 24hr
Calendar:	MM/DD
Weekday in 7 languages:	EN/FR/DE/ES/IT/NL/RU
RCC time signal:	WWVB
Time zone:	PST, MST, CST, EST, AST, NST
DST:	Auto/off
INDOOR BAROMETER SPECIFICATIONS	
Barometer unit:	hPa, inHg, mmHg
Measuring range:	540 ~ 1100 hPa
Accuracy:	(700 ~ 1100 hPa ± 5 hPa) / (540 ~ 696 hPa ± 8 hPa) (20.67 ~ 32.48 inHg ± 0.15 inHg) / (15.95 ~ 20.55 inHg ± 0.24 inHg) (525 ~ 825 mmHg ± 3.8 mmHg) / (405 ~ 522 mmHg ± 6 mmHg) Typical at 77 °F (25 °C)
Resolution:	1 hPa/0.01 inHg/0.1 mmHg
Weather forecast:	Sunny/Clear, Partly Cloudy, Cloudy, Rainy, Rainy/Stormy, and Snowy
Memory modes:	Historical data for last 24 hours, MAX/MIN

INDOOR TEMPERATURE DISPLAY & FUNCTION SPECIFICATIONS	
Temperature unit:	°C or °F
Range:	14 °F - 122 °F (-5 °C - 50 °C)
Accuracy:	< 32 °F or >104 °F ± 3.6 °F (< 0 °C or > 40 °C ± 2 °C) 32 °F ~104 °F ± 1.8 °F (0°C ~ 40 °C ± 1 °C)
Resolution:	0.1 °F/0.1 °C
Memory modes:	Historical data of past 24 hours, MAX/MIN
INDOOR HUMIDITY DISPLAY & FUNCTION SPECIFICATIONS	
Range:	20% - 90% RH (< 20%: LO; > 90%: HI) (Temperature between 32 °F - 140 °F)
Accuracy:	20% ~ 40% RH ± 8% RH @ 77 °F (25 °C) 41% ~ 70% RH ± 5% RH @ 77 °F (25 °C) 71% ~ 90% RH ± 8% RH @ 77 °F (25 °C)
Resolution:	1%
Memory modes:	Historical data of past 24 hours, MAX/MIN
WIRELESS 7-IN-1 OUTDOOR SENSOR	
GENERAL SPECIFICATIONS	
Dimensions (W x H x D):	13.5" x 15.5" x 5.4" (343.5 x 393.5 x 136 mm) (installed on mount)
Weight:	1.7 lbs. (757 g) (with batteries)
Main power:	3 x AA 1.5 V batteries (lithium batteries recommended)
Weather data:	Temperature, humidity, wind speed, wind direction, rainfall, UV, light intensity
RF transmission range:	Up to 492 ft. (150 m)
RF frequency:	915 MHz
Transmission interval:	Every 12 seconds
Location use for sensor:	Outdoor use
Adult assembly required for sensor:	Yes
Additional tools required for sensor:	Screwdriver or wrench
OUTDOOR TEMPERATURE DISPLAY & FUNCTION SPECIFICATIONS	
Temperature unit:	°C or °F
Range:	-40 °F - 140 °F (-40 °C - 60 °C)
Resolution:	0.1 °F/0.1 °C
Accuracy:	41.2 °F ~ 140 °F ± 0.7 °F (5.1 °C ~ 60 °C ± 0.4 °C) -3.8 °F ~ 41 °F ± 1.8 °F (-19.9 °C ~ 5 °C ± 1 °C) -40 °F ~ -4 °F ± 2.7 °F (-40 °C ~ -20 °C ± 1.5 °C)
Memory modes:	Historical data for last 24 hours, MAX/MIN

OUTDOOR HUMIDITY DISPLAY & FUNCTION SPECIFICATIONS	
Range:	1% - 99% RH
Accuracy:	1% ~ 20% RH ± 6.5% RH @ 77 °F (25 °C) 21% ~ 80% RH ± 3.5% RH @ 77 °F (25 °C) 81% ~ 99% RH ± 6.5% RH @ 77 °F (25 °C)
Resolution:	1%
Memory modes:	Historical data of past 24 hours, MAX/MIN
WIND SPEED/DIRECTION DISPLAY & FUNCTION SPECIFICATIONS	
Wind speed unit:	mph, m/s, km/h, knots
Wind speed display range:	0 ~ 112 mph, 50 m/s, 180 km/h, 97 knots
Resolution:	0.1 mph, 0.1 m/s, 0.1 knots
Speed accuracy:	< 5 m/s: +/- 0.5 m/s; > 5 m/s: +/- 6%
Memory modes:	Historical data of past 24 hours, MAX
Wind direction:	16 directions or 360 degrees
RAIN DISPLAY & FUNCTION SPECIFICATIONS	
Rainfall unit:	mm and in
Accuracy for rainfall:	± 7%
Range for rainfall:	0" ~ 393.7" (0 ~ 9999 mm)
Resolution:	0.0157" (0.4 mm)
Memory modes:	Historical data of past 24 hours, MAX
UV INDEX DISPLAY AND FUNCTION SPECIFICATIONS	
Display range:	0 ~ 16
Resolution:	0.1
Memory modes:	Historical data of past 24 hours, MAX
LIGHT INTENSITY DISPLAY AND FUNCTION SPECIFICATIONS	
Light intensity unit:	Klux (lux), Kfc (fc), W/m2
Display range:	0 ~ 200 Klux
Resolution:	0.1 Klux, 0.1 Kfc, 0.1 W/m^2
Memory modes:	Historical data of past 24 hours, MAX

LIMITED WARRANTY TO ORIGINAL CONSUMER

This Logia 7-in-1 Wireless Weather Station ("Product"), including any accessories included in the original packaging, as supplied and distributed new by an authorized retailer is warranted by C&A Marketing, Inc. (the "Company") to the original consumer purchaser only, against certain defects in material and workmanship ("Warranty") as follows:

To receive Warranty service, the original consumer purchaser must contact the Company or its authorized service provider for problem determination and service procedures. Proof of purchase in the form of a bill of sale or receipted invoice, evidencing that the Product is within the applicable Warranty period(s), MUST be presented to the Company or its authorized service provider in order to obtain the requested service.

Service options, parts availability, and response times may vary and may change at any time. In accordance with applicable law, the Company may require that you furnish additional documents and/or comply with registration requirements before receiving warranty service. Please contact our customer service for details on obtaining warranty service:

Email: info@supportcbp.com

Phone: 833-815-0568

Shipping expenses to the Company's Return Facility are not covered by this warranty, and must be paid by the consumer. The consumer likewise bears all risk of loss or further damage to the Product until delivery to said facility.

EXCLUSIONS AND LIMITATIONS

The Company warrants the Product against defects in materials and workmanship under normal use for a period of ONE (1) YEAR from the date of retail purchase by the original end-user purchaser ("Warranty Period"). If a hardware defect arises and a valid claim is received within the Warranty Period, the Company, at its sole option and to the extent permitted by law, will either (1) repair the Product defect at no charge, using new or refurbished replacement parts, (2) exchange the Product with a Product that is new or which has been manufactured from new or serviceable used parts and is at least functionally equivalent to the original device, or (3) refund the purchase price of the Product.

A replacement Product or part thereof shall enjoy the warranty of the original Product for the remainder of the Warranty Period, or ninety (90) days from the date of replacement or repair, whichever provides you longer protection. When a Product or part is exchanged, any replacement item becomes your property, while the replaced item becomes the Company's property. Refunds can only be given if the original Product is returned.

This Warranty does not apply to:

(a) Any non-Logia 7-in-1 Wireless Weather Station product, hardware or software, even if packaged or sold with the Product;

(b) Damage caused by use with non-Logia 7-in-1 Wireless Weather Station products;

(c) Damage caused by accident, abuse, misuse, flood, fire, earthquake, or other external causes;

(d) Damage caused by operating the Product outside the permitted or intended uses described by the Company;

(e) Damage caused by third party services;

(f) A Product or part that has been modified to alter functionality or capability without the written permission of the Company;

(g) Consumable parts, such as batteries, fuses, and bulbs;

(h) Cosmetic damage; or

(i) If any Logia 7-in-1 Wireless Weather Station serial number has been removed or defaced.

This Warranty is valid only in the country where the consumer purchased the Product, and only applies to Products purchased and serviced in that country.

The Company does not warrant that the operation of the Product will be uninterrupted or error-free. The Company is not responsible for damage arising from your failure to follow instructions relating to its use.

NOTWITHSTANDING ANYTHING TO THE CONTRARY AND TO THE MAXIMUM EXTENT PERMITTED BY APPLICABLE LAW, THE COMPANY PROVIDES THE PRODUCT "AS-IS" AND "AS-AVAILABLE" FOR YOUR CONVENIENCE AND THE COMPANY

AND ITS LICENSORS AND SUPPLIERS EXPRESSLY DISCLAIM ALL WARRANTIES AND CONDITIONS, WHETHER EXPRESSED, IMPLIED, OR STATUTORY, INCLUDING THE WARRANTIES OF MERCHANTABILITY, FITNESS FOR A PARTICULAR PURPOSE, TITLE, QUIET ENJOYMENT, ACCURACY, AND NON-INFRINGEMENT OF THIRD-PARTY RIGHTS. THE COMPANY DOES NOT GUARANTEE ANY SPECIFIC RESULTS FROM THE USE OF THE PRODUCT, OR THAT THE COMPANY WILL CONTINUE TO OFFER OR MAKE AVAILABLE THE PRODUCT FOR ANY PARTICULAR LENGTH OF TIME. THE COMPANY FURTHER DISCLAIMS ALL WARRANTIES AFTER THE EXPRESS WARRANTY PERIOD STATED ABOVE.

YOU USE THE PRODUCT AT YOUR OWN DISCRETION AND RISK. YOU WILL BE SOLELY RESPONSIBLE FOR (AND THE COMPANY DISCLAIMS) ANY AND ALL LOSS, LIABILITY, OR DAMAGES RESULTING FROM YOUR USE OF THE PRODUCT.

NO ADVICE OR INFORMATION, WHETHER ORAL OR WRITTEN, OBTAINED BY YOU FROM THE COMPANY OR THROUGH ITS AUTHORIZED SERVICE PROVIDERS SHALL CREATE ANY WARRANTY.

IN NO EVENT WILL THE COMPANY'S TOTAL CUMULATIVE LIABILITY ARISING FROM OR RELATED TO THE PRODUCT, WHETHER IN CONTRACT OR TORT OR OTHERWISE EXCEED THE FEES ACTUALLY PAID BY YOU TO THE COMPANY OR ANY OF ITS AUTHORIZED RESELLERS FOR THE PRODUCT AT ISSUE IN THE LAST YEAR FROM YOUR PURCHASE. THIS LIMITATION IS CUMULATIVE AND WILL NOT BE INCREASED BY THE EXISTENCE OF MORE THAN ONE INCIDENT OR CLAIM. THE COMPANY DISCLAIMS ALL LIABILITY OF ANY KIND OF ITS LICENSORS AND SUPPLIERS. IN NO EVENT WILL THE COMPANY OR ITS LICENSORS, MANUFACTURERS, AND SUPPLIERS BE LIABLE FOR ANY INCIDENTAL, DIRECT, INDIRECT, SPECIAL, PUNITIVE, OR CONSEQUENTIAL DAMAGES (SUCH AS, BUT NOT LIMITED TO, DAMAGES FOR LOSS OF PROFITS, BUSINESS, SAVINGS, DATA, OR RECORDS) CAUSED BY THE USE, MISUSE, OR INABILITY TO USE THE PRODUCT.

Nothing in these terms shall attempt to exclude liability that cannot be excluded under applicable law. Some countries, states, or provinces do not allow the exclusion or limitation of incidental or consequential damages or allow limitations on warranties, so certain limitations or exclusions may not apply to you. This warranty gives you specific legal rights, and you may have other rights that vary from state to state or province to province. Contact your authorized retailer to determine if another warranty applies.

FCC STATEMENT

This device complies with Part 15 of the FCC Rules. Operation is subject to the following two conditions:
(1) This device may not cause harmful interference, and;
(2) This device must accept any interference received, including interference that may cause undesired operation.
NOTE: This equipment has been tested and found to comply with the limits for a Class B digital device, pursuant to part 15 of the FCC Rules. These limits are designed to provide reasonable protection against harmful interference in a residential installation. This equipment generates—and can radiate—radio frequency energy and, if not installed and used in accordance with the instructions, may cause harmful interference to radio communications. However, there is no guarantee that interference will not occur in a particular installation. If the equipment does not cause harmful interference to radio or television reception, which can be determined by turning the equipment off and on, the user is encouraged to try to correct the interference by one or more of the following measures:

- Reorient or relocate the receiving antenna
- Increase the separation between the equipment and the receiver
- Connect the equipment into an outlet on a circuit different from that to which the receiver is connected.
- Consult the dealer or an experienced radio/TV technician for help.

The provided shielded USB cable must be used with this unit to ensure compliance with the class B FCC limits.
Warning: Changes or modifications to this unit not expressly approved by the party responsible for compliance could void the user's authority to operate the equipment.
Caution: To maintain compliance with the FCC's RF exposure guidelines, place the unit at least 20cm from nearby persons.

If you experience any issues with your Logia 7-in-1 Wireless Weather Station, please contact us before returning your product to the place of purchase. We're here to help!

QUESTIONS OR PROBLEMS? CONTACT US!

Email: info@supportcbp.com or call: 1-833-815-0568
www.logiaweatherstation.com

LOGIA is a trademark of C&A IP Holdings LLC in the US, Canada, China, and the EU.

All other products, brand names, company names, and logos are trademarks of their respective owners, used merely to identify their respective products, and are not meant to connote any sponsorship, endorsement, or approval.

Distributed by C&A Marketing, Inc., 114 Tived Lane East, Edison, NJ 08837. Made in China.

© 2021. C&A IP Holdings LLC. All Rights Reserved.