aiwa

QUICK START GUIDE

IN THE BOX

POWER ON CONNECT

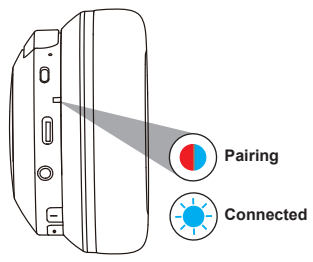

VOICE PROMPTS
Power ON
Pairing
Connected

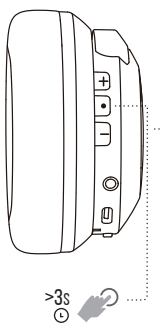

Power on and automatically enter pairing mode

Choose **"Aiwa ARC-2 ANC "** to connect

* To enter pairing mode again, power off and then hold **PowerButton** for 5 seconds

NOISE CANCEL

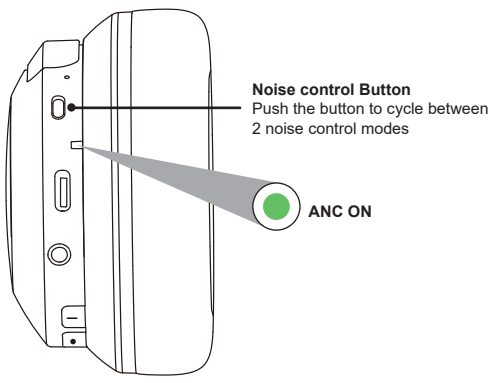

ANC ON
blocks out external sounds

ANC OFF
turn off noise cancellation

CONTROL

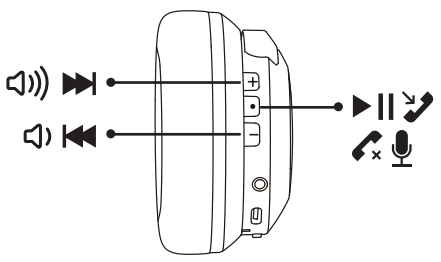

+	• Press once to **increase volume** — Press and hold to **skip forward**
●	• Press once to **play, pause, or answer, end a phone call** Press twice to **activate Siri or other voice control software** • Press three times to **enter low latency mode**. — Press and hold to **power ON or OFF**
—	• Press once to **decrease volume** — Press and hold to **skip back**

LOW LATENCY ON
real-time audio feedback
while gaming or watching video

WIRED LISTENING MODE

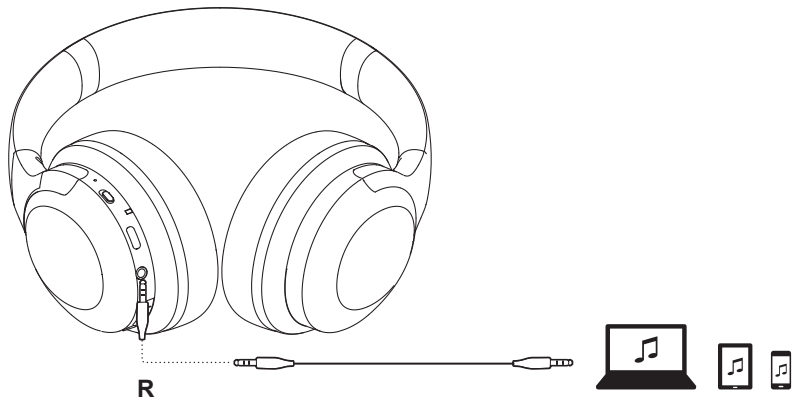

CHARGING

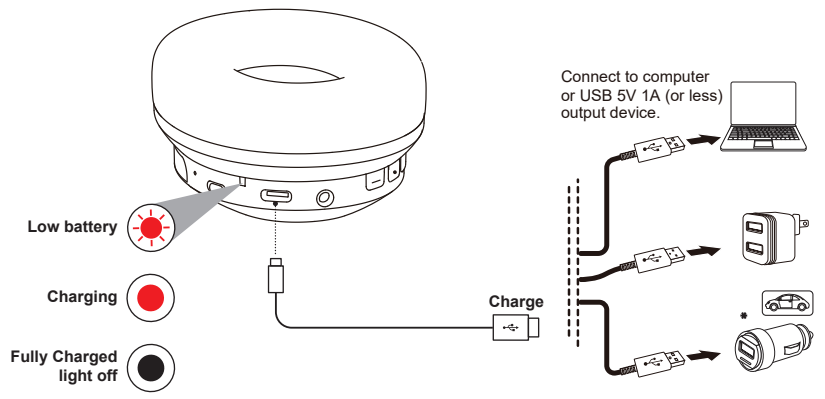

RESET

Please make sure you forget "Aiwa ARC-2 ANC " from your Bluetooth device settings before resetting

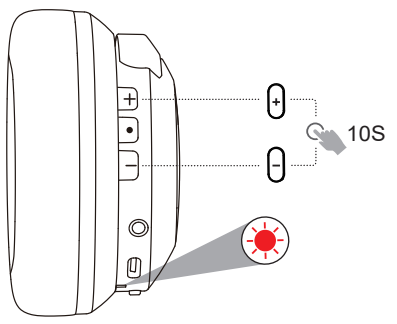

Keep holding **+/-** buttons simultaneously for 10seconds until you see the **red** light flashing 3times. Headphone **power OFF** automatically

Please read this manual carefully before use.

Safety warnings
Do not place any naked flame sources, such as lighted candles
Dispose of batteries responsibly and be aware of the environmental effects of battery disposal
Do not expose the batteries (batteries installed) to excessive heat, such as fire or the like

Warning
To prevent possible hearing damage, do not listen at high volume levels for long periods.
For your own safety, please be aware of your surroundings when using these headphones.

FCC Statement
This equipment has been tested and found to comply with the limits for a Class B digital device, pursuant to part 15 of the FCC rules. These limits are designed to provide reasonable protection against harmful interference in a residential installation. This equipment generates, uses and can radiate radio frequency energy and, if not installed and used in accordance with the instructions, may cause harmful interference to radio communications.
However, there is no guarantee that interference will not occur in a particular installation. If this equipment does cause harmful interference to radio or television reception, which can be determined by turning the equipment off and on, the user is encouraged to try to correct the interference by one or more of the following measures:
-Reorient or relocate the receiving antenna.
-Increase the separation between the equipment and receiver.
-Connect the equipment into an outlet on a circuit different from that to which the receiver is connected.
-Consult the dealer or an experienced radio/TV technician for help.
To assure continued compliance, any changes or modifications not expressly approved by the party.Responsible for compliance could void the user's authority to operate this equipment.
This equipment complies with Part 15 of the FCC Rules. Operation is subject to the following two conditions:
(1) This device may not cause harmful interference, and
(2) This device must accept any interference received, including interference that may cause undesired operation.

FCC Radiation Exposure Statement:
The device has been evaluated to meet general RF exposure requirement.
The device can ben used inthe portable exposure condition with restiction