Hillstone Multi-core Security Appliance

Installation Manual

StoneOS 5.0R4P3.1

www.hillstonenet.com

Name and Concentration of Toxic or Hazardous Substances and Elements in Products

Component	Toxic or hazardous substances and elements					
	Lead	Mercury	Cadmium	Cr6+	PBB	PDBE
Metal parts (including fasteners)	X	O	O	O	O	O
Printed circuit board assemblies and components	X	O	O	O	O	O
Cables and cable assemblies	X	O	O	O	O	O
Plastics and Polymers	X	O	O	O	X	X
Electric components other than circuit boards	X	O	O	O	O	O

O: Indicates that this toxic or hazardous substance in the material is below the limit requirement defined in *Requirements for Concentration Limits for Certain Hazardous Substances in Electronic Information Products (SJ/T11363-2006)* issued by Ministry of Information Industry of PRC.

X: Indicates that this toxic or hazardous substance in the material exceeds the limit requirement specified in *Requirements for Concentration Limits for Certain Hazardous Substances in Electronic Information Products (SJ/T11363-2006)* issued by Ministry of Information Industry of PRC.

Note: Not all components in the table are included in one product.

This symbol indicates the environment friendly use period of all products and components. The period applies only to the normal operation conditions specified in this manual.

Preface

About This Manual

Thanks for choosing the network security products from Hillstone Networks, Inc.

This document is an installation manual for Hillstone multi-core security appliances to help you install the Hillstone multi-core security appliance properly.

This manual includes the following chapters:

- Chapter 1. Introduction
- Chapter 2. Installation Preparations
- Chapter 3. Installation
- Chapter 4. Boot and Configuration
- Chapter 5. Hardware Maintenance and Replacement
- Chapter 6. Troubleshooting

Document Conventions

This manual uses the following conventions for your convenience to read and understand:

- **Warning**: Indicates improper operation that may cause serious damage to equipment or injury to operators. Thus, operators must strictly follow the operation rules.
- **Caution**: Indicates incorrect operation that may affect the normal use of the equipment. Operators should be careful.
- **Note**: Indicates information that may help readers understand the content.

Table of Contents

NAME AND CONCENTRATION OF TOXIC OR HAZARDOUS SUBSTANCES AND ELEMENTS IN PRODUCTS 2

PREFACE 3

ABOUT THIS MANUAL 3
DOCUMENT CONVENTIONS 3

TABLE OF CONTENTS 4

LIST OF FIGURES 6

LIST OF TABLES 7

CHAPTER 1 INTRODUCTION 1

OVERVIEW 1
FEATURES 1
Innovative Multi-core Plus® G2 Security Architecture 1
Modular Design 2
Multiple Network Access Technologies 2
HARDWARE OVERVIEW 2
Front Panel 2
Back Panel 10
LED Indicators 14
System Parameters 16
Ports 19
CLR Button 23
Expansion Slot 24
SD Card Slot 24
Power Supply 25
Expansion Modules 26

CHAPTER 2 INSTALLATION PREPARATIONS 28

INTRODUCTION 28
CLEANNESS REQUIREMENTS 28
ESD PREVENTION 28
EMI PREVENTION 28
GROUNDING REQUIREMENTS 29
WORKBENCH REQUIREMENTS 29
OTHER SAFETY RECOMMENDATIONS 29
UNPACKING 29
INSTALLATION DEVICES/TOOLS/CABLES 29

CHAPTER 3 INSTALLATION 31

BEFORE INSTALLATION 31
INSTALLING THE APPLIANCE ON A WORKBENCH 31
INSTALLING THE APPLIANCE ON A RACK 32
CONNECTING CABLES 33

Connecting the Ground Wire *33*
Connecting the Console Cable *33*
Connecting the Ethernet Cable *33*
Connecting an AC Power Cable *34*
Connecting a DC Power Cable *34*
Connecting a Power Adapter *35*
INSTALLING AN ANTENNA 35
INSTALLING THE SIM CARD 36
VERIFYING INSTALLATION 37

CHAPTER 4 BOOT AND CONFIGURATION 38

INTRODUCTION 38
ESTABLISHING A CONFIGURATION ENVIRONMENT 38
Console (CON) Connection *38*
WebUI *39*
Tenet and SSH *40*
BASIC CONFIGURATION 40

CHAPTER 5 HARDWARE MAINTENANCE AND REPLACEMENT 41

INTRODUCTION 41
INSTALLING AND REMOVING THE POWER SUPPLY MODULE 41
Installing/Removing the Power Supply Module (G5150/ M8860/ M7260) *41*
INSTALLING AND REMOVING THE EXPANSION MODULE 42
Installing and Removing the Fan Tray *42*

CHAPTER 6 TROUBLESHOOTING 43

INTRODUCTION 43
LOSING THE ADMINISTRATOR PASSWORD 43
TROUBLESHOOTING POWER SYSTEM 43
TROUBLESHOOTING THE CONFIGURATION SYSTEM 43

COPYRIGHT INFORMATION 44

List of Figures

Figure 1-1: SG-6000-G5150 Front Panel 3
Figure 1-2: SG-6000-G2120 Front Panel 4
Figure 1-3： SG-6000-M8860 Front Panel 4
Figure 1-4： SG-6000-M7260 Front Panel 5
Figure 1-5: SG-6000-M3108 Front Panel 6
Figure 1-6: SG-6000-M3100 Front Panel 6
Figure 1-7: SG-6000-M1600 Front Panel 7
Figure 1-8: Front Panel of SG-6000-E2800 and SG-6000-E2300 7
Figure 1-9: SG-6000-E1700 Front Panel 8
Figure 1-10: SG-6000-E1600 Front Panel 8
Figure 1-11: Front Panel of SG-6000-E1100 (WLAN version) 9
Figure 1-12: Front Panel of SG-6000-E1100 (3G version) 9
Figure 1-13: Front Panel of SG-6000-E1100 (WLAN+3G version) 10
Figure 1-14: SG-6000-G5150 Back Panel 10
Figure 1-15: SG-6000-G2120 Back Panel 11
Figure 1-16: SG-6000-M8860 Back Panel 11
Figure 1-17: SG-6000-M7260 Back Panel 11
Figure 1-18: SG-6000-M3108 Back Panel 11
Figure 1-19: SG-6000-M3100 Back Panel 12
Figure 1-20: SG-6000-M1600 Back Panel 12
Figure 1-21: Back Panel of SG-6000-E2800, SG-6000-E2300, and SG-6000-E1700 12
Figure 1-22: SG-6000-E1600 Back Panel 12
Figure 1-23: SG-6000-E1100 (WLAN version) Back Panel 13
Figure 1-24: SG-6000-E1100 (3G version) Back Panel 13
Figure 1-25: SG-6000-E1100 (WALN+3G version) Back Panel 14
Figure 1-26: AC Power Module for SG-6000-G5150/M8860/M7260 26
Figure 1-27: DC Power Module for SG-6000-G5150/M8860 /M7260 26
Figure 3-1: Installing the Rubber Pads 31
Figure 3-2: Installing the Rack-mounting Ears (1U Chassis as example) 32
Figure 3-3: Installing the Appliance in a Rack (1U Chassis as example) 32
Figure 3-4: 3G Antenna and WLAN Antenna 36
Figure 3-5: Antenna Installation Illustration 36
Figure 4-1: Console Port Configuration 38
Figure 4-2: Setting Parameters for the Terminal Session 39
Figure 5-1: Installing Power Supply Module of SG-6000-G5150 /M8860/ M7260 41

List of Tables

Table 1-1: SG-6000-G5150 Front Panel Description 3
Table 1-2: SG-6000-G2120 Front Panel 4
Table 1-3: SG-6000-M8860 Front Panel Description 5
Table 1-4: SG-6000-M7260 Front Panel Description 6
Table 1-5: SG-6000-M3108 Front Panel Description 6
Table 1-6: SG-6000-M3100 Front Panel 7
Table 1-7: SG-6000-M1600 Front Panel Description 7
Table 1-8: Front Panel Description of SG-6000-E2800 and SG-6000-E2300 8
Table 1-9: SG-6000-E1700 Front Panel Description 8
Table 1-10: SG-6000-E1600 Front Panel Description 9
Table 1-11: Front Panel Description of SG-6000-E1100 (WLAN version) 9
Table 1-12: Front Panel Description of SG-6000-E1100 (3G version) 10
Table 1-13: Front Panel Description of SG-6000-E1100 (WLAN+3G version) 10
Table 1-14: Back Panel Description of SG-6000-E1600 12
Table 1-15: Back Panel Description of SG-6000-E1100 (WLAN version) 13
Table 1-16: Back Panel Description of SG-6000-E1100 (3G version) 14
Table 1-17: Back Panel Description of SG-6000-E1100 (WLAN+3G version) 14
Table 1-18: Front Panel LED Descriptions 16
Table 1-19: System Parameters 19
Table 1-20: Console Port Attributes 20
Table 1-21: Auxiliary Port Attributes 20
Table 1-22: USB Port Attributes 20
Table 1-23: Gigabit Copper Port Attributes 21
Table 1-24: SFP Port Attributes 21
Table 1-25: SFP Optical Module Attributes 22
Table 1-26: SFP Copper Module Attributes 22
Table 1-27: XFP Port Attributes 23
Table 1-28: XFP Optical Module Attributes 23
Table 1-29: Power Supplies of All Product Models 25
Table 1-30: Power Supply Module LED Descriptions 26
Table 2-1: Dust Concentration Requirements in the Equipment Room 28

Chapter 1 Introduction

Overview

The SG-6000 series multi-core security appliances are a new generation of multi-core security appliance developed by Hillstone Networks. With Multi-core Plus® G2 architecture and role-based deep application inspection technology, the SG-6000 series can provide better network security than the IP/port based security defense of traditional firewalls. The hardware modular design of SG-6000 series expands the performance and solves the performance weakness of the existing UTM products when AV and IPS protections are turned on. SG-6000 series have a processing ability from 100 megabits to 10 gigabits, making it suitable for various network environments, including networks of SMEs, governments, large enterprises, ISPs and IDCs, etc. The software of SG-6000 series provides abundant features, such as role and application based security service, IPsec/SSL VPN, application QoS, AV and content security, etc.

Hillstone SG-6000 series product models include SG-6000-G5150, SG-6000-G2120, SG-6000-M8860, SG-6000-M7260, SG-6000-M3108, SG-6000-M3100, SG-6000-M1600, SG-6000-E2800, SG-6000-E2300, SG-6000-E1700, SG-6000-E1600, SG-6000-E1100 (WLAN version), SG-6000-E1100 (3G version), and SG-6000-E1100 (WLAN+3G version).

SG-6000-G5150, SG-6000-G2120, SG-6000-M8860, and SG-6000-M7260 adopt modular design of hot-swappable circuit boards. For more information about extensible modules, please see *Hillstone Multi-core Security Appliance Expansion Module Manual*.

Features

This section describes the main features of the SG-6000 series multi-core security appliances.

Innovative Multi-core Plus® G2 Security Architecture

StoneOS®, Hillstone's proprietary 64-bit real-time operating system, has a powerful parallel processing capability. Compared to Layer 3 security processing of the ordinary multi-core and NP/ASIC processors, StoneOS® achieves real multi-core parallel processing from the Network Layer to the Application Layer with its patent parallel architecture. Thus, SG-6000 series security appliances have an up to 5 times performance elevation in application processing compared to other appliances with similar hardware configuration. The StoneOS® performance ability creates a strong foundation for an integrated security product, solving the performance limit

faced by traditional appliances when multiple functionalities are running simultaneously.

Modular Design

Some models of Hillstone SG-6000 series support expansion modules. There are two kinds of pluggable hardware expansion modules: I/O module and storage module. The modular design greatly protects customer's investment.

- The I/O module enhances the connectivity of the device, so that the device will not be obsolete when the network develops.
- The storage module is used to store logs and statistics collected by the device.

Multiple Network Access Technologies

Some models of Hillstone SG-6000 series have built-in 3G communication module, which supports WCDMA, CDMA2000, and TD-SCDMA. The maximum downloading rate can reach 21Mbps. Besides, these models support the WAN access mode, such as ADSL, PPoE, and dedicated line. With WAN access mode and 3G communication module, you can implement link redundancy and load balancing.

Support 802.11a/b/g/n WLAN access standards, use double MIMO antenna technology, support up to 300Mbps wireless network connection rate, provide 9 Gigabyte Ethernet ports. Meanwhile, support the flexible WLAN access management technology, such as the user limit of SSID, user security isolation, and QoS traffic management.

Hardware Overview

Hillstone multi-core security appliances are designed to fit in standard 19-inch cabinets/racks. A security appliance can be installed in a cabinet/rack or placed on a workbench.

Front Panel

The front panel of SG-6000-G5150 consists of 4 Gigabit Ethernet ports, 8 SFP ports, 1 USB port, 1 Console port, 1 Auxiliary port, 1 CLR button, 4 general expansion slots, some LED indicators and 1 fan tray. Figure 1-1 illustrates the front panel of SG-6000-G5150.

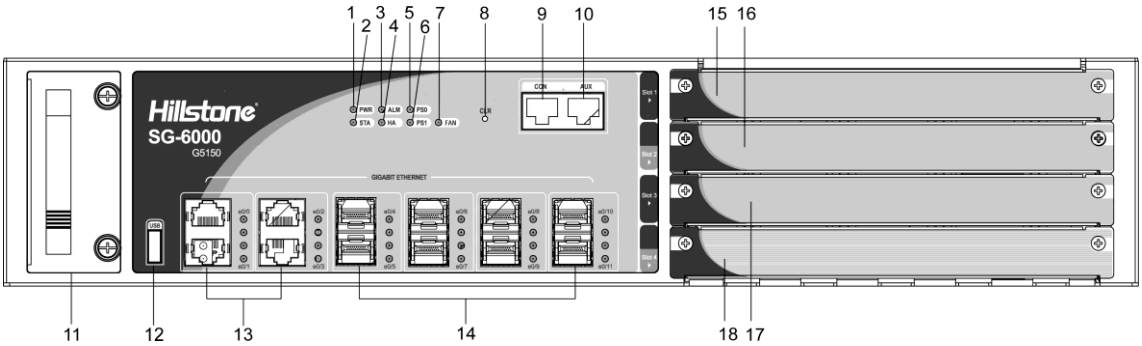

Figure 1-1: SG-6000-G5150 Front Panel

No.	Label	No.	Label	No.	Label
1	PWR: Power LED	7	FAN: Fan tray LED	13	e0/0 - e0/3: Gigabit Ethernet ports
2	STA: Status LED	8	CLR: CLR button	14	e0/4 - e0/11: SFP ports
3	ALM: Alarm LED	9	CON: Console port	15	Slot 1: General expansion slot
4	HA：HA status LED	10	AUX: Auxiliary port	16	Slot 2: General expansion slot
5	PS0: Power PS0 LED	11	Fan tray	17	Slot 3: General expansion slot
6	PS1: Power PS1 LED	12	USB: USB port	18	Slot 4: General expansion slot

Table 1-1: SG-6000-G5150 Front Panel Description

The front panel of SG-6000-G2120 consists of 4 Gigabit Ethernet ports, 4 SFP ports, 1 USB port, 1 Console port, 1 Auxiliary port, 1 CLR button, 2 general expansion slots and some LED indicators. Figure 1-2 illustrates the front panel of SG-6000-G2120.

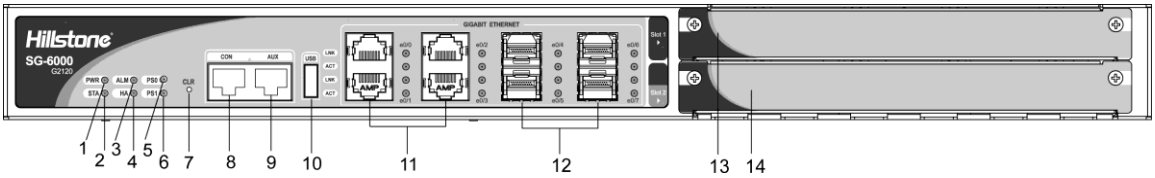

Figure 1-2: SG-6000-G2120 Front Panel

No.	Label	No.	Label	No.	Label
1	PWR: Power LED	6	PS1: Power PS1 LED	11	e0/0 - e0/3: Gigabit Ethernet ports
2	STA: Status LED	7	CLR: CLR button	12	e0/4 - e0/7: SFP ports
3	ALM: Alarm LED	8	CON: Console port	13	Slot 1: General expansion slot
4	HA：HA status LED	9	AUX: Auxiliary port	14	Slot 2: General expansion slot
5	PS0: Power PS0 LED	10	USB: USB port	-	-

Table 1-2: SG-6000-G2120 Front Panel

The front panel of SG-6000-M8860 consists of 4 Gigabit Ethernet ports, 4 SFP ports, 1 USB port, 1 HA port, 1 management port, 1 console port, 1 auxiliary port, 1 CLR button, 4 general expansion slots and several LED indicators. The standard power supply for SG-6000-M3108 is dual power supplies, and the product with single power supply is also available. Figure 1-3 illustrates the front panel of SG-6000-M8860 (single power supply):

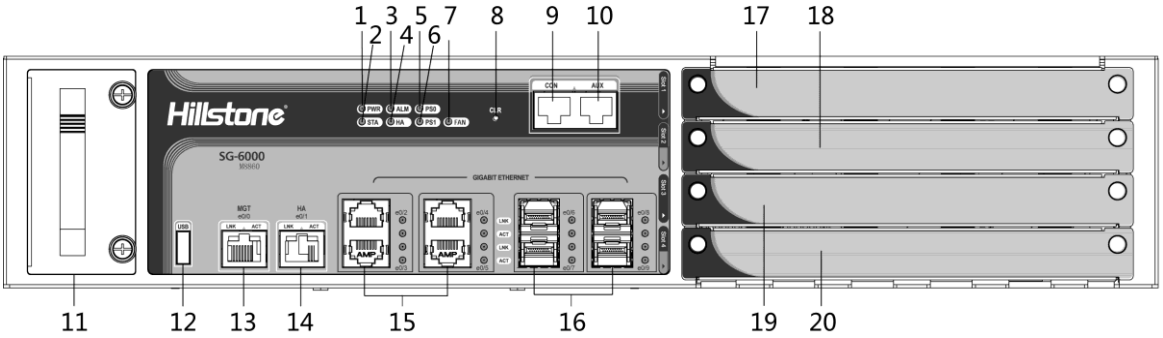

Figure 1-3：SG-6000-M8860 Front Panel

No.	Label	No.	Label	No.	Label
1	PWR: Power LED	8	CLR: CLR button	15	e0/2 - e0/5: Gigabit Ethernet ports
2	STA: Status LED	9	CON: Console port	16	e0/6 - e0/9: SFP ports
3	ALM: Alarm LED	10	AUX: Auxiliary port	17	Slot 1: General expansion slot
4	HA: HA status LED	11	Fan tray	18	Slot 2: General expansion slot (not for storage expansion module)
5	PS0: Power supply PS0 LED	12	USB: USB port	19	Slot 3: General expansion slot (not for storage expansion module)
6	PS1: Power supply PS1 LED	13	MGT (e0/0): management port	20	Slot 4: General expansion slot (not for storage expansion module)
7	FAN: Fan LED	14	HA (e0/1): HA port	-	-

Table 1-3: SG-6000-M8860 Front Panel Description

The front panel of SG-6000-M7260 consists of 4 Gigabit Ethernet ports, 4 SFP ports, 1 USB port, 1 HA port, 1 management port, 1 console port, 1 auxiliary port, 1 CLR button, 4 general expansion slots and several LED indicators. The standard power supply for SG-6000-M7260 is dual power supplies, and the product with single power supply is also available. Figure 1-4 illustrates the front panel of SG-6000-M7260 (dual power supplies):

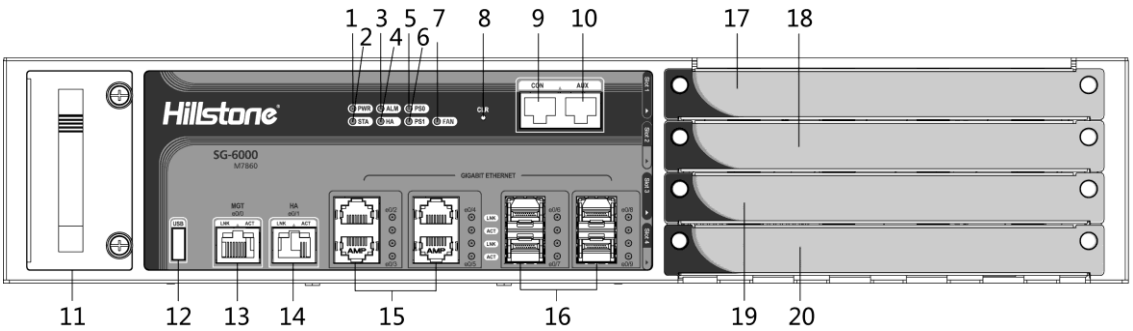

Figure 1-4：SG-6000-M7260 Front Panel

No.	Label	No.	Label	No.	Label
1	PWR: Power LED	8	CLR: CLR button	15	e0/2 - e0/5: Gigabit Ethernet ports
2	STA: Status LED	9	CON: Console port	16	e0/6 - e0/9: SFP ports
3	ALM: Alarm LED	10	AUX: Auxiliary port	17	Slot 1: General expansion slot
4	HA：HA status LED	11	Fan tray	18	Slot 2: General expansion slot (not for storage expansion module)
5	PS0: Power	12	USB: USB port	19	Slot 3: General expansion

	supply PS0 LED				slot (not for storage expansion module)
6	PS1: Power supply PS1 LED	13	MGT (e0/0): management port	20	Slot 4: General expansion slot (not for storage expansion module)
7	FAN: Fan LED	14	HA (e0/1): HA port	-	-

Table 1-4: SG-6000-M7260 Front Panel Description

The front panel of SG-6000-M3108 consists of 8 Gigabit Ethernet ports, 2 Combo ports (Ethernet port + SFP port), 1 USB port, 1 SD card slot, 1 Console port, 1 CLR button and some LED indicators. The standard power supply for SG-6000-M3108 is single power supply, and the product with dual power supplies is also available. Figure 1-5 illustrates the front panel of SG-6000-M3108 (single power supply).

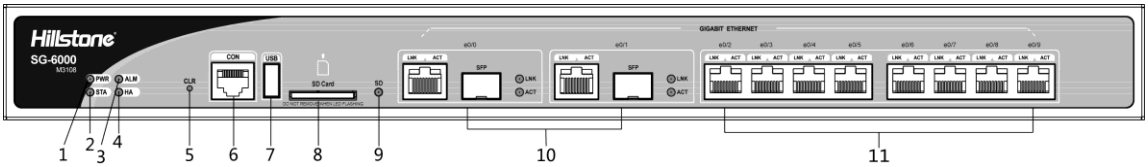

Figure 1-5: SG-6000-M3108 Front Panel

No.	Label	No.	Label	No.	Label
1	PWR: Power LED	5	CLR: CLR button	9	SD: SD card LED
2	STA: Status LED	6	CON: Console port	10	e0/0 - e0/1: Combo ports
3	ALM: Alarm LED	7	USB: USB port	11	e0/2 - e0/9: Gigabit Ethernet ports
4	HA：HA status LED	8	SD Card: SD card slot	-	-

Table 1-5: SG-6000-M3108 Front Panel Description

The front panel of SG-6000-M3100 consists of 8 Gigabit Ethernet ports, 1 USB port, 1 Console port, 1 CLR button and some LED indicators. Figure 1-6 illustrates the front panel of SG-6000-M3100.

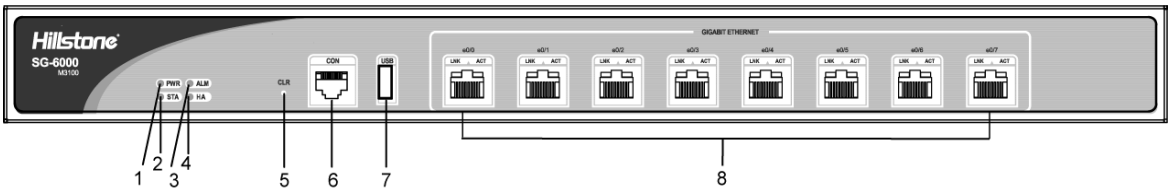

Figure 1-6: SG-6000-M3100 Front Panel

No.	Label	No.	Label	No.	Label
1	PWR: Power LED	4	HA: HA status LED	7	USB: USB port
2	STA: Status LED	5	CLR: CLR button	8	e0/0 - e0/7: Gigabit Ethernet ports
3	ALM: Alarm LED	6	CON: Console port	-	-

Table 1-6: SG-6000-M3100 Front Panel

The front panel of SG-6000-M1600 consists of 5 Gigabit Ethernet ports, 1 USB port, 1 Console port, 1 CLR button and some LED indicators. Figure 1-7 illustrates the front panel of SG-6000-M1600.

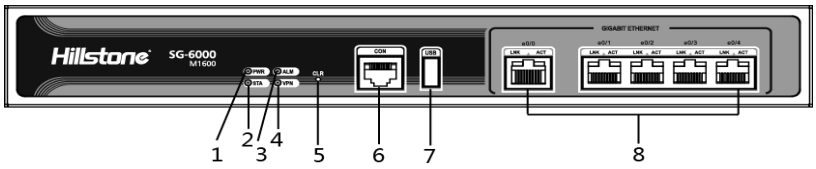

Figure 1-7: SG-6000-M1600 Front Panel

No.	Label	No.	Label	No.	Label
1	PWR: Power LED	4	VPN: VPN status LED	7	USB: USB port
2	STA: Status LED	5	CLR: CLR button	8	e0/0 - e0/4: Gigabit Ethernet ports
3	ALM: Alarm LED	6	CON: Console port	-	-

Table 1-7: SG-6000-M1600 Front Panel Description

SG-6000-E2800 and SG-6000-E2300 have the same front panel. The front panel consists of 5 Gigabit Ethernet ports, 4 Combo ports (Ethernet port + SFP port), 1 USB port, 1 Console port, 1 CLR button and some LED indicators. Figure 1-8 illustrates the front panel of SG-6000-E2800 and SG-6000-E2300.

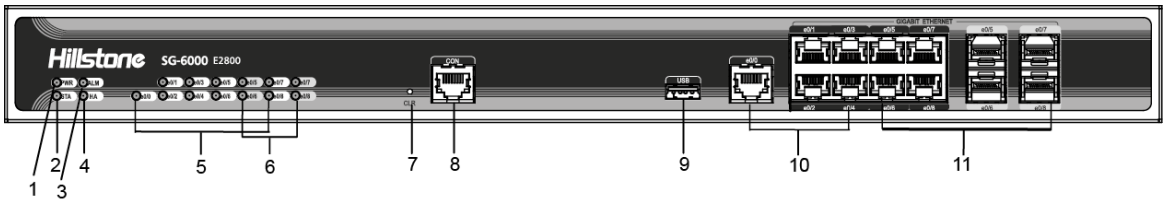

Figure 1-8: Front Panel of SG-6000-E2800 and SG-6000-E2300

No.	Label	No.	Label	No.	Label
1	PWR: Power LED	5	e0/0 - e0/8: Gigabit Ethernet port status LED	9	USB: USB port
2	STA: Status LED	6	e0/5 - e0/8: SFP interface LED	10	e0/0 - e0/4: Gigabit Ethernet ports
3	ALM: Alarm LED	7	CLR: CLR button	11	e0/0 - e0/4: Combo ports (Ethernet port + SFP port)
4	HA: HA status LED	8	CON: Console port	-	-

Table 1-8: Front Panel Description of SG-6000-E2800 and SG-6000-E2300

The front panel of SG-6000-E1700 consists of 9 Gigabit Ethernet ports, 1 USB port, 1 Console port, 1 CLR button and some LED indicators. Figure 1-9 illustrates the front panel of SG-6000-E1700.

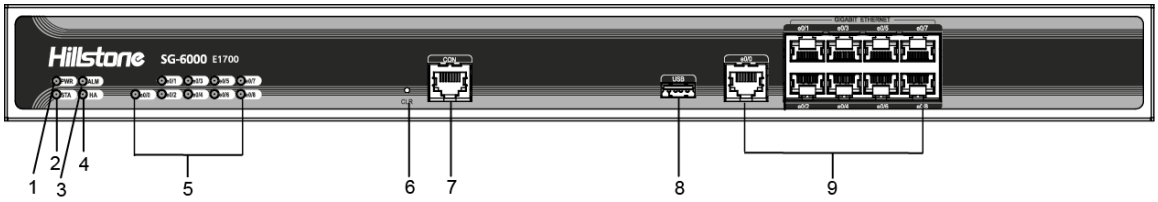

Figure 1-9: SG-6000-E1700 Front Panel

No.	Label	No.	Label	No.	Label
1	PWR: Power LED	4	HA: HA status LED	7	CON: Console port
2	STA: Status LED	5	e0/0 - e0/4: Gigabit Ethernet port status LED	8	USB: USB port
3	ALM: Alarm LED	6	CLR: CLR button	9	e0/0 - e0/4: Gigabit Ethernet ports

Table 1-9: SG-6000-E1700 Front Panel Description

The front panel of SG-6000-E1600 consists of some LED indicators. Figure 1-10 illustrates the front panel of SG-6000- E1600.

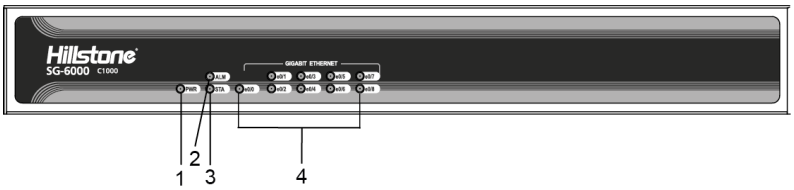

Figure 1-10: SG-6000-E1600 Front Panel

No.	Label	No.	Label	No.	Label
1	PWR: Power LED	3	STA: Status LED	-	-
2	ALM: Alarm LED	4	e0/0 - e0/8: Gigabit Ethernet port status LED	-	-

Table 1-10: SG-6000-E1600 Front Panel Description

The front panel of SG-6000-E1100 (WLAN version) consists of some LED indicators. Figure 1-11 illustrates the front panel of SG-6000-E1100 (WLAN version).

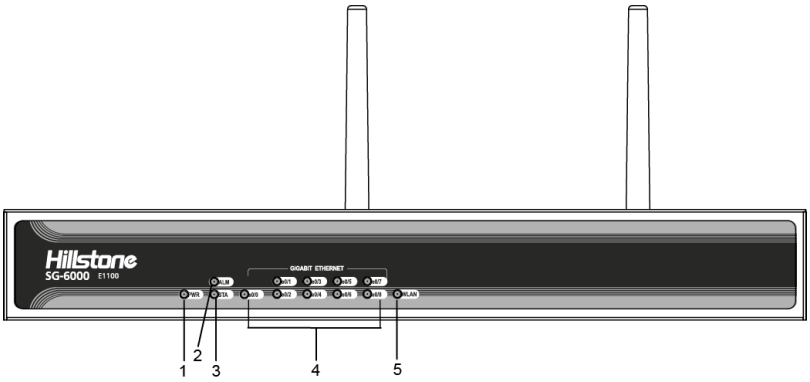

Figure 1-11: Front Panel of SG-6000-E1100 (WLAN version)

No.	Label	No.	Label	No.	Label
1	PWR: Power LED	3	STA: Status LED	5	WLAN: WLAN LED
2	ALM: Alarm LED	4	e0/0 - e0/8: Gigabit Ethernet port status LED	-	-

Table 1-11: Front Panel Description of SG-6000-E1100 (WLAN version)

The front panel of SG-6000-E1100 (3G version) consists of some LED indicators. Figure 1-12 illustrates the front panel of SG-6000-E1100 (3G version).

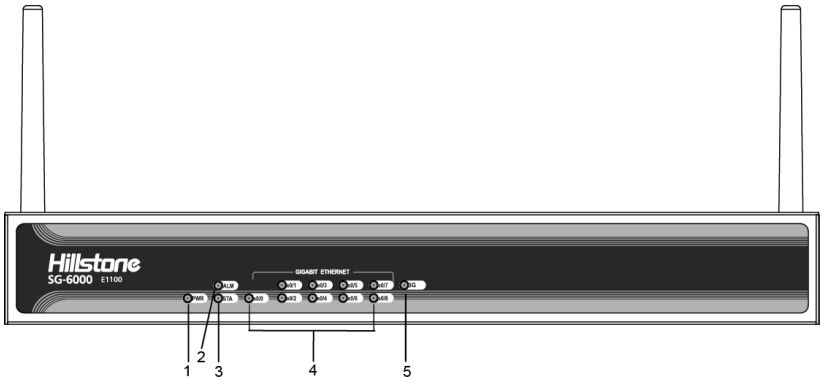

Figure 1-12: Front Panel of SG-6000-E1100 (3G version)

No.	Label	No.	Label	No.	Label
1	PWR: Power LED	3	STA: Status LED	5	3G: 3G LED
2	ALM: Alarm LED	4	e0/0 - e0/8: Gigabit Ethernet port status LED	-	-

Table 1-12: Front Panel Description of SG-6000-E1100 (3G version)

The front panel of SG-6000-E1100 (WLAN+3G version) consists of some LED indicators. Figure 1-13 illustrates the front panel of SG-6000-E1100 (WLAN+3G version).

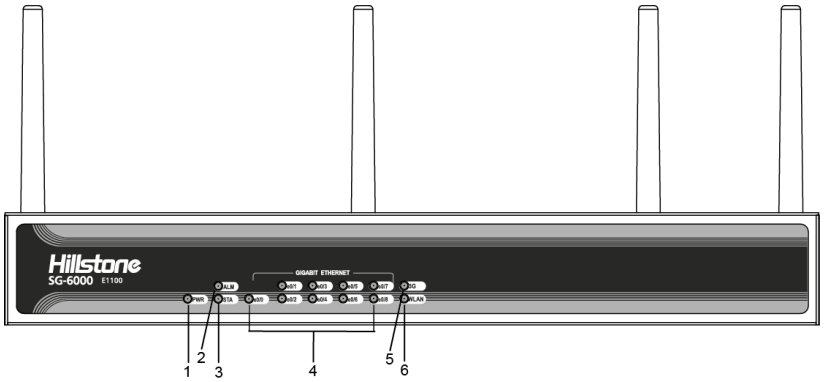

Figure 1-13: Front Panel of SG-6000-E1100 (WLAN+3G version)

No.	Label	No.	Label	No.	Label
1	PWR: Power LED	3	STA: Status LED	5	3G: 3G LED
2	ALM: Alarm LED	4	e0/0 - e0/8: Gigabit Ethernet port status LED	6	WLAN: WLAN LED

Table 1-13: Front Panel Description of SG-6000-E1100 (WLAN+3G version)

Back Panel

The back panel layout of SG-6000-G5150 consists of 2 power supply slots and 1 grounding screw. The standard product of SG-6000-G5150 adopts dual power supplies. Figure 1-14 illustrates the back panel layout of SG-6000-G5150.

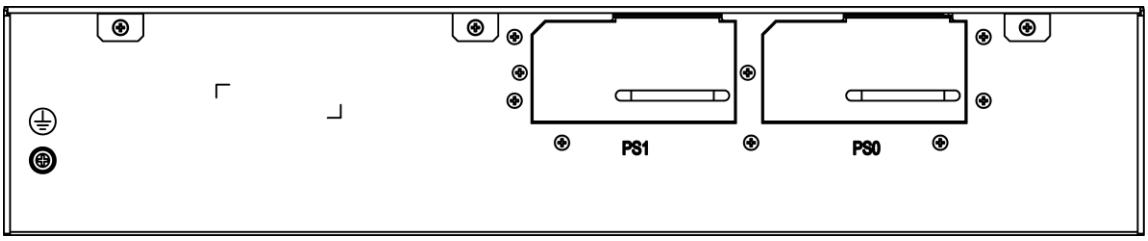

Figure 1-14: SG-6000-G5150 Back Panel

The back panel layout of SG-6000-G2120 consists of 2 power supply sockets, 2 power supply switches and 1 grounding screw. SG-6000-G2120 adopts dual power supplies. Figure 1-15 illustrates the back panel layout of SG-6000-G2120.

Figure 1-15: SG-6000-G2120 Back Panel

The back panel layout of SG-6000-M8860 consists of 2 power supply sockets, 1 grounding screw. The standard product of SG-6000-G8860 adopts dual power supplies and it is also available in single power supply. Figure 1-16 is the back panel of SG-6000-M8860 (single power supply):

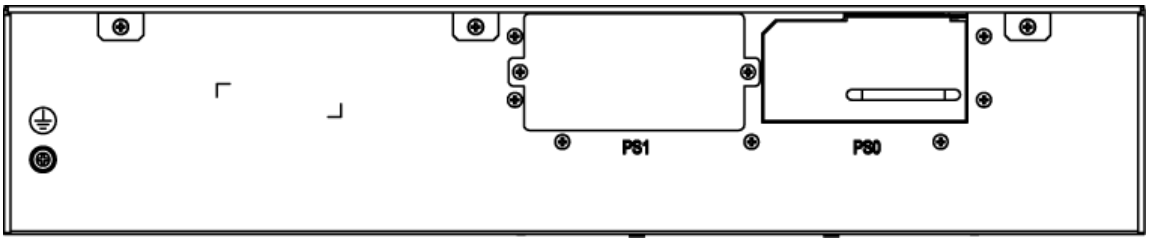

Figure 1-16: SG-6000-M8860 Back Panel

The back panel layout of SG-6000-M7260 consists of 2 power supply sockets and 1 grounding screw. The standard product of SG-6000-M7260 adopts dual power supplies and it is also available in single power supply. Figure 1-17 illustrates the back panel layout of SG-6000-M7260.

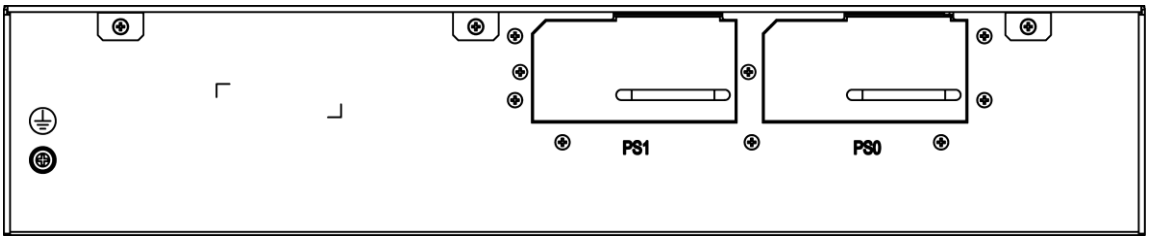

Figure 1-17: SG-6000-M7260 Back Panel

The back panel layout of SG-6000-M3108 consists of 1 power supply socket, 1 power supply switch and 1 grounding screw. The standard product of SG-6000-M3108 adopts single power supply and it is also available in dual power supplies. Figure 1-18 illustrates the back panel layout ofSG-6000-M3108 (single power supply).

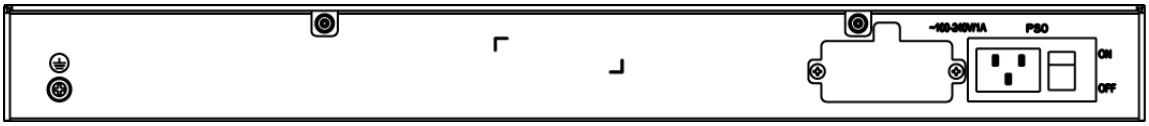

Figure 1-18: SG-6000-M3108 Back Panel

The back panel of SG-6000-M3100 consists of 1 power supply socket, 1 power supply switch and 1 grounding screw. Figure 1-19 illustrates the back panel layout of SG-6000-M3100.

Figure 1-19: SG-6000-M3100 Back Panel

The back panel of SG-6000-M1600 has 1 power supply socket, 1 power supply switch and 1 grounding screw. Figure 1-20 illustrates the back panel of SG-6000-M1600.

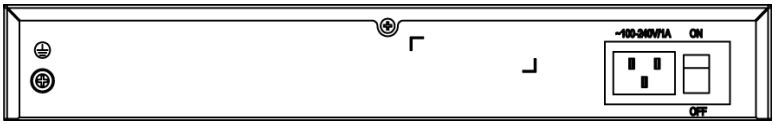

Figure 1-20: SG-6000-M1600 Back Panel

SG-6000-E2800, SG-6000-E2300, and SG-6000-E1700 have the same back panel layout. The standard products SG-6000-E2800, SG-6000-E2300, and SG-6000-E1700 adopt single power supply and they are also available in dual power supplies. The back panel of single power supply product has 1 power supply socket, 1 power supply switch and 1 grounding screw. Figure 1-21 illustrates the back panel of these models.

Figure 1-21: Back Panel of SG-6000-E2800, SG-6000-E2300, and SG-6000-E1700

SG-6000-E1600 uses the power adapter. The back panel of SG-6000-E1600 has 1 power supply socket, 1 Console port, 1 CLR button, 9 Gigabyte Ethernet ports, 1 USB port, 1 grounding screw, and 1 security keyhole. Figure 1-22 illustrates the back panel of this model.

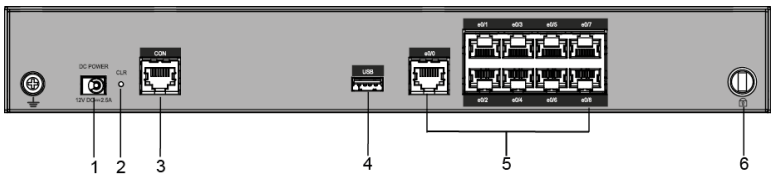

Figure 1-22: SG-6000-E1600 Back Panel

No.	Label	No.	Label	No.	Label
1	DC POWER: DC power interface	3	CON: Console port	5	e0/0 - e0/8: Gigabit Ethernet port
2	CLR: CLR button	4	USB: USB port	6	Security keyhole

Table 1-14: Back Panel Description of SG-6000-E1600

SG-6000-E1100 (WLAN version) uses the power adapter. The back panel of SG-6000-E1100 (WLAN version) has 1 power supply socket, 1 Console port, 1 CLR button, 9 Gigabyte Ethernet ports, 1 USB port, 1 grounding screw, 1 security

keyhole, and 2 SMA connectors for WLAN antennas. Figure 1-23 illustrates the back panel of this model.

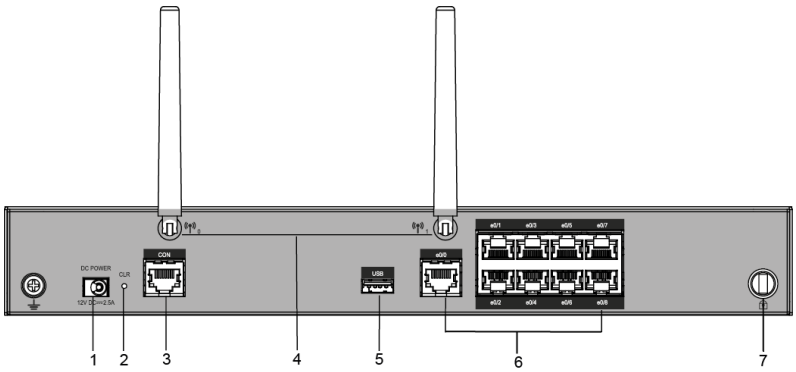

Figure 1-23: SG-6000-E1100 (WLAN version) Back Panel

No.	Label	No.	Label	No.	Label
1	DC POWER: DC power interface	4	SMA connectors for WLAN antennas	7	Security keyhole
2	CLR: CLR button	5	USB: USB port	-	-
3	CON: Console port	6	e0/0 - e0/8: Gigabit Ethernet port	-	-

Table 1-15: Back Panel Description of SG-6000-E1100 (WLAN version)

SG-6000-E1100 (3G version) uses the power adapter. The back panel of SG-6000-E1100 (3G version) has 1 power supply socket, 1 Console port, 1 CLR button, 9 Gigabyte Ethernet ports, 1 USB port, 1 grounding screw, 1 security keyhole, and 2 SMA connectors for 3G antennas. Figure 1-24 illustrates the back panel of this model.

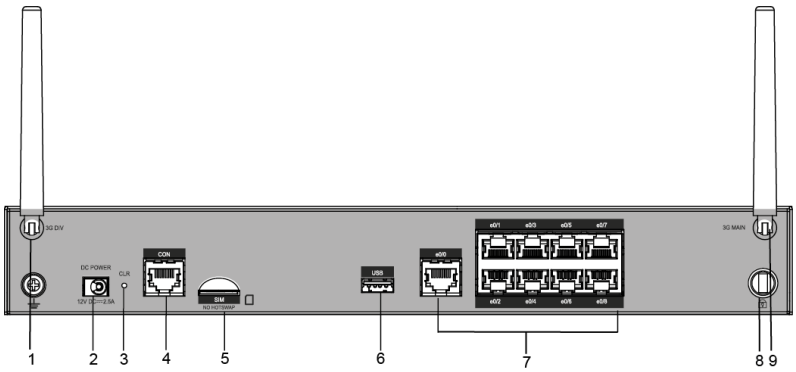

Figure 1-24: SG-6000-E1100 (3G version) Back Panel

No.	Label	No.	Label	No.	Label
1	SMA connector for 3G antenna	4	CON: Console port	7	e0/0 - e0/8: Gigabit Ethernet port
2	DC POWER: DC power interface	5	SIM: SIM card slot	8	Security keyhole
3	CLR： CLR button	6	USB: USB port	9	SMA connector for 3G antenna

Table 1-16: Back Panel Description of SG-6000-E1100 (3G version)

SG-6000-E1100 (WLAN+3G version) uses the power adapter. The back panel of SG-6000-E1100 (WLAN+3G version) has 1 power supply socket, 1 Console port, 1 CLR button, 9 Gigabyte Ethernet ports, 1 USB port, 1 grounding screw, 1 security keyhole, 2 SMA connectors for 3G antennas, and 2 SMA connectors for WLAN antennas. Figure 1-25 illustrates the back panel of this model.

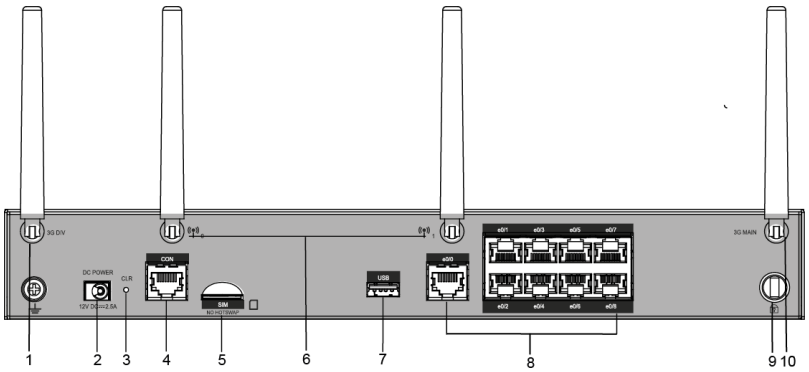

Figure 1-25: SG-6000-E1100 (WALN+3G version) Back Panel

No.	Label	No.	Label	No.	Label
1	SMA connector for 3G antenna	5	SIM: SIM card slot	9	Security keyhole
2	DC POWER: DC power interface	6	SMA connectors for WLAN antennas	10	SMA connector for 3G antenna
3	CLR： CLR button	7	USB: USB port	-	-
4	CON: Console port	8	e0/0 - e0/8: Gigabit Ethernet port	-	-

Table 1-17: Back Panel Description of SG-6000-E1100 (WLAN+3G version)

LED Indicators

Table 1-8 describes the meanings of LED indicators on the front panels of Hillstone multi-core security appliances.

LED	Color/Status	Description
PWR	Green/Always on	The device power is running normally.
	Orange/Always on	The device power is running abnormally.
	Red/Always on	Power failure so the system is down.

	Off	The device is powered off.
STA	Green/Always on	The system is booting.
	Green/Blinking	The system is running normally.
	Red/Always on	The system has failed to boot or has an error.
ALM	Red/Always on	The system is sending alarm(s).
	Green/Blinking	The system is waiting.
	Orange/Blinking	The system is using a trial license.
	Orange/Always on	The trial license has expired and there is no legitimate license installed in the system.
	Off	The system is running normally.
PS0	Green/Always on	Power Supply PS0 is running normally.
	Orange/Always on	Power Supply PS0 is running normally, but its fan has failed. Change the power supply immediately.
	Off	Power Supply PS0 is powered off or has failed.
PS1	Green/Always on	Power Supply PS1 is running normally.
	Orange/Always on	Power Supply PS1 is running normally, but its fan has failed. Change the power supply immediately.
	Off	Power Supply PS0 is powered off or has failed.
HA	Green/Always on	Not using HA, this device is the master device.
	Green/Blinking	Two devices are in an HA cluster. This device is working as the master.
	Orange/Blinking	Two devices are in an HA cluster. This device is working as the slave.
	Red/Blinking	HA function has failed.
	Off	High Availability is disabled.
FAN	Green/Always on	The cooling system is running normally.
	Orange/Always on	One of the fans has failed, but the cooling system can still fully function. Change the fan tray as soon as possible.
	Red/Always on	The cooling system has a serious error or the fan tray is not fully inserted. The system will automatically shut down in 15 seconds.
VPN	Green/Always on	The VPN tunnel is connected.
	Orange/Always on	VPN is turned on but no tunnel is connected.
	Off	VPN is not in use.
SD	Green/Always on	SD card has been inserted and is in normal status.
	Green/Blinking	SD card is transmitting data.
	Off	No SD card is inserted.
LNK	Green/Always	The link between this port and its peer device is in

	on	normal status.
	Off	The link between this port and its peer device has failed.
ACT	Orange/Blinking	The port is sending or receiving data.
	Off	No data is transmitted on this port.
e0/0-e0/8	Green/Always on	The link between this port and its peer device is in normal status.
	Green/Blinking	The port is sending or receiving data.
	Off	There is no connection between this port with the its peer device, or the link between this port and its peer device fails.
3G	Green/Always on	The device discovers the built-in 3G Express module.
	Green/Blinking	The 3G module is sending or receiving data.
WLAN	Green/Always on	The device discovers the built-in WLAN module.
	Green/Blinking	The WLAN module is sending or receiving data.

Table 1-18: Front Panel LED Descriptions

Notes:

- The STA and ALM LEDs will both turn red when there is a boot failure caused by OS software damage. Contact your sales representative if this occurs.
- As the number and type of LED indicators may vary from different product models, please refer to the actual product.

System Parameters

Table 1-9 lists the system parameters of Hillstone multi-core security appliances of all models.

Item		Description
Fixed Ports	SG-6000-G5150	4 Gigabit Ethernet ports 8 SFP ports 1 USB 2.0 Host port 1 Console port 1 Auxiliary port
	SG-6000-G2120	4 Gigabit Ethernet ports 4 SFP ports 1 USB 2.0 Host port 1 Console port 1 Auxiliary port
	SG-6000-M8860 SG-6000-M7260	4 Gigabit Ethernet ports 4 SFP ports 1 USB 2.0 Host port 1 MGT port 1 HA port 1 Console port 1 Auxiliary port

	SG-6000-M3108	8 Gigabit Ethernet ports 2 Gigabit Combo ports 1 USB 2.0 Host port 1 SD card slot 1 Console port
	SG-6000-M3100	8 Gigabit Ethernet ports 1 USB 2.0 Host port 1 Console port
	SG-6000-M1600	5 Gigabit Ethernet ports 1 USB 2.0 Host port 1 Console port
	SG-6000-E2800 SG-6000-E2300	5 Gigabit Ethernet ports 4 Gigabit Combo ports (Ethernet port + SFP port) 1 USB 2.0 Host port 1 Console port
	SG-6000-E1700 SG-6000-E1600 SG-6000-E1100 (WLAN version) SG-6000-E1100 (3G version) SG-6000-E1100 (WLAN+3G version)	9 Gigabit Ethernet ports 1 USB 2.0 Host port 1 Console port
CPU		Dedicated 64-bit multi-core processor
DDR 2 SDRAM	SG-6000-M8860 SSG-6000-M7260	16GB
	SG-6000-G5150	4GB
	SG-6000-G2120 SG-6000-E2800 SG-6000-E2300 SG-6000-E1700	2 GB
	SG-6000-M3108 SG-6000-M3100 SG-6000-E1600 SG-6000-E1100 (WLAN version) SG-6000-E1100 (3G version) SG-6000-E1100 (WLAN+3G version)	1 GB
	SG-6000-M1600	512 MB
Flash Memory	SG-6000-G5150 SG-6000-G2120 SG-6000-M8860 SG-6000-M7260 SG-6000-M3108 SG-6000-M3100 SG-6000-M1600 SG-6000-E2800 SG-6000-E2300 SG-6000-E1700	512 MB

	SG-6000-E1600 SG-6000-E1100 (WLAN version) SG-6000-E1100 (3G version) SG-6000-E1100 (WLAN+3G version)	
Dimensions (W×D×H)	SG-6000-G5150 SG-6000-M8860 SG-6000-M7260	440.0 mm x 520.0 mm x 88.0 mm
	SG-6000-G2120	436.0 mm x 365.5 mm x 44.0 mm
	SG-6000-M3108 SG-6000-M3100 SG-6000-E2800 SG-6000-E2300 SG-6000-E1700	442.0 mm x 240.7 mm x 44.0 mm
	SG-6000-M1600	300.0 mm x 165.0 mm x 44.0 mm
	SG-6000-E1600 SG-6000-E1100 (WLAN version) SG-6000-E1100 (3G version) SG-6000-E1100 (WLAN+3G version)	320.0mm x 150.0mm x 44.0mm
Weight	SG-6000-G5150	Net weight: 12.3 kg Gross weight: 16.8 kg (accessories and packages included)
	SG-6000-G2120	et weight: 5.6 kg Gross weight: 9.1 kg (accessories and packages included)
	SG-6000-M8860 SG-6000-M7260	Net weight: 12.3 kg Gross weight: 16.8 kg(accessories and packages included)
	SG-6000-M3108	Net weight: 2.9 kg Gross weight: 5.7 kg (accessories and packages included)
	SG-6000-M3100	Net weight: 2.8 kg Gross weight: 5.6 kg (accessories and packages included)
	SG-6000-M1600	Net weight: 1.5 kg Gross weight: 1.9 kg (accessories and packages included)
	SG-6000-E2800 SG-6000-E2300 SG-6000-E1700	Net weight: 2.5 kg Gross weight: 5.3 kg (accessories and packages included)
	SG-6000-E1600	Net weight: 1.5 kg

	SG-6000-E1100 (WLAN version) SG-6000-E1100 (3G version) SG-6000-E1100 (WLAN+3G version)	Gross weight: 2.0 kg (accessories and packages included)
Power Rating	SG-6000-G5150 SG-6000-M8860 SG-6000-M7260	450 W (x 2)
	SG-6000-G2120	150 W x 2
	SG-6000-M3108 SG-6000-M3100 SG-6000-E2800 SG-6000-E2300 SG-6000-E1700	45 W
	SG-6000-M1600	15 W
	SG-6000-E1600 SG-6000-E1100 (WLAN version) SG-6000-E1100 (3G version) SG-6000-E1100 (WLAN+3G version)	30 W
Input Voltage	AC	100-240V AC, 50/60Hz
	DC	-40 - -60V DC
Ambient Temperature		0℃-40℃
Relative Humidity		10%-95% (non-condensing)

Table 1-19: System Parameters

Note: DDR2 SDRAM is the random access memory to store the communication data for the CPU. Flash Memory is used for storing the operating system firmware, configuration and application files.

Ports

This section introduces attributes of interfaces (ports) on the Hillstone devices, including console port, auxiliary port, USB port, gigabit copper port, SFP port and XFP port.

Console Port

Hillstone multi-core security appliance provides an RS-232C asynchronous serial console port for you to configure the appliance. Attributes for the console (CON) port are shown in Table 1-10.

Attribute	Description
Connector	RJ-45
Port Standard	RS-232C
Baud Rate	9600/19200/38400/57600/115200 bit/s
Services	Connect the CON port to the serial port of a PC and run a terminal emulation program on the PC to configure the appliance.
Transmission Medium	console cable

Table 1-20: Console Port Attributes

Auxiliary Port

Hillstone multi-core security appliance provides an RS-232C asynchronous serial auxiliary (AUX) port. Attributes for the auxiliary port are shown in Table 1-11.

Attribute	Description
Connector	RJ-45
Port Standard	RS-232C
Baud Rate	9600/19200/38400/57600/115200 bit/s
Services	Aux port is used for debugging.
Transmission Medium	console cable

Table 1-21: Auxiliary Port Attributes

USB Port

Hillstone multi-core security appliance provides up to two USB host ports. Attributes for the USB port are shown in Table 1-12.

Attribute	Description
Connector	USB Type-A interface
Port Standard	USB 2.0 host interface
Negotiation Mode	1.1/2.0 autosensing

Table 1-22: USB Port Attributes

Gigabit Copper Port

Hillstone multi-core security appliance provides several fixed gigabit copper ports; the gigabit Combo port also supports the copper cable connection. Attributes for the gigabit copper port are shown in Table 1-13.

Attribute	Description
Connector	RJ-45
Port Standard	Auto-MDIX
Frame Format	Ethernet_II Ethernet_SNAP
Negotiation Mode	10/100/1000Mbps autosensing Full/half-duplex

Table 1-23: Gigabit Copper Port Attributes

SFP Port

Hillstone multi-core security appliance supports SFP ports. The Table 1-14 describes the attributes of SFP port.

Attribute	Description	
Connector	SFP	
Frame Format	Ethernet_II Ethernet_SNAP	
Negotiation Mode	SFP optical module	1000Mbps
	SFP copper module	10/100/1000Mbps autosensing (some only supports 1000Mbps) Full / half-duplex

Table 1-24: SFP Port Attributes

Caution: To avoid dust falling into the SFP socket, you should place a rubber dust cap (originally in the accessory box) over the SFP port.

The SFP port has two types of interface transceiver module for you to choose:

- SFP optical module/transceiver
- Copper SFP transceiver

If you choose to use SFP optical module in SFP port, you should use LC-Type optical connector. Hillstone multi-core security appliance supports five types of 1000Base-FX SFP optical modules. All optical modules are hot-swappable.

Attribute	Description				
	Short-haul Multimode Optical Module (850nm)	Medium-haul Single-mode Optical Module (1310nm)	Long-haul Single-mode Optical Module (1310nm)	Long-haul Single-mode Optical Module (1550nm)	Ultra-long Haul Single-mode Optical Module (1550nm)
Connector	LC				
Fiber Type	62.5/125μm multi-mode fiber	9/125μm single-mode fiber	9/125μm single-mode fiber	9/125μm single-mode fiber	9/125μm single-mode fiber
Maximum Transmission Distance	0.55km	10km	40km	40km	70km
Central Wavelength	850nm	1310nm	1310nm	1550nm	1550nm

Table 1-25: SFP Optical Module Attributes

If you choose to use copper SFP transceiver in SFP port, you should use crossover or straight-through cable (i.e. standard Ethernet cable). Table 1-16 describes the attributes of copper SFP transceiver.

Attribute	Description
Connector	RJ-45
Port Standard	Auto-MDI/MDIX (crossover cable and straight-through cable autosensing)
Maximum Transmission Distance	100m
Negotiation Mode	10/100/1000Mbps autosensing (some only supports 1000Mbps) Full / half-duplex

Table 1-26: SFP Copper Module Attributes

Cautions:

- The SFP electric modules of all platforms only support 1000Mbps.
- Before switching between the optical and copper cable connection on Combo ports, you need to first clear the rate and duplex mode configurations in the current operating mode (copper or optical), and re-configure the port after the switching.

XFP Port

Hillstone multi-core security appliances support XFP ports which use XFP optical modules.

Attribute	Description	
Connector	XFP	
Frame Format	Ethernet_II Ethernet_SNAP	
Negotiation Mode	XFP optical module	10Gbps

Table 1-27: XFP Port Attributes

Hillstone multi-core security appliance supports five types of 10GBase-FX XFP optical module. All optical modules are hot-swappable.

Attribute	Description				
	Short-haul Multimode Optical Module (850nm)	Short-haul Multimode Optical Module (850nm)	Medium-haul Single-mode Optical Module (1310nm)	Long-haul Single-mode Optical Module (1550nm)	Ultra-long Haul Single-mode Optical Module (1550nm)
Connector	LC				
Fiber Type	50/125μm multimode fiber	62.5/125μm multi-mode fiber	9/125μm single-mode fiber	9/125μm single-mode fiber	9/125μm single-mode fiber
Maximum Transmission Distance	0.3km (984.3ft)	0.033km (108.3ft)	10km	40km	80km
Central Wavelength	850nm	850nm	1310nm	1550nm	1550nm

Table 1-28: XFP Optical Module Attributes

Caution: To avoid dust falling into the XFP socket, you should place a rubber dust cap (originally in the accessory box) over the XFP port.

CLR Button

The CLR button is the pinhole of the front panel and is used to reset the appliance back to the factory default settings. You can restore access to the appliance with this button if the login password is lost.

Warning: Use this button with caution. Resetting the appliance will clear all existing configurations.

To restore the factory default settings, take the following steps:

1. Turn off the power of the appliance.
2. Press the CLR button in the pinhole and switch on the power supply simultaneously.
3. Keep pressing till the STA and ALM LEDs turn to constantly red, then stop pressing. The appliance begins to restore to the original factory settings.
4. The system reboots after the default settings restored.

Expansion Slot

The chassis height of SG-6000-G5150, SG-6000-M8860, and SG-6000-M7260 is 2U with four half-U expansion slots (Slot 1-4); SG-6000-G2120 is 1U height with two half-U expansion slots (Slot 1-2). Follow the rules below when inserting the expansion modules into expansion slots.

- Half-U expansion slot fits in any slot.
- 1U height expansion modules can only be installed in Slot2 and Slot4.
- For SG-6000-G2120, the expansion module FEC-HD-160 can only be inserted in Slot1.
- Some appliances support more than one expansion modules of the same type.

Cautions:

- Cover the expansion slot with blank panel if the slot has no expansion module installed.
- For detailed information of expansion modules, see *Hillstone Multi-core Security Appliance Expansion Modules Manual*.

SD Card Slot

SG-6000-M3108 has a SD card slot for SD storage card on the front panel. SD card stores the data of the Network Behavior Control logs.

To install an SD card, take the following steps:

1. Ensure that the write protection switch is off so that it can be written.
2. Face the front panel of the appliance.
3. Insert the SD card with the metal contact side facing down and push it slightly into the card slot. Do not push too hard with force to avoid damage to the slot or the card.
4. Stick the seal label on the SD card slot to warn others not to eject the SD card freely.

Caution: You should back up the old data in the SD card before inserting it into the slot, as the system will automatically format the card in one minute.

To remove an SD card, take the following steps:

1. Run the command `exec detach sd0` on the CLI interface.
2. Face the front panel of the appliance.
3. Rip off the label stuck on the slot.
4. Push the SD card slightly and it will pop up.

Note: Hillstone adopts the Secure Digital High Capacity (SDHC) standard. To ensure the requirements of capacity and storage writing speed, the SD card should at least have a capacity of 4GB and a speed of Class 4 (4 MB/s). The

maximum capacity that can be supported is 32GB.

Power Supply

Single/Dual power supply: Some product modules adopt single power supply, while others adopt dual power supplies, i.e. there are two power inputs installed in one device. Dual power supplies ensure uninterrupted power by instantly enabling the standby power supply when the active power supply fails to work.

AC/DC power supply: For some product modules (as listed below), you can choose either AC or DC power supply.

Hot-swappable: According to whether the power supply is hot-swappable or not, the power supply is classifies into three types:

- Hot-swappable power supplies are removable modules which can be replaced at any time,
- Fixed power supplies are irreplaceable and cannot be removed.
- External power adapter connects to the external AC power supply.

For instructions on how to replace power supply modules, refer to Installing and Removing the Power Supply Module.

Model	Description	AC/DC	Power Supply Type
SG-6000-G5150	Dual	AC/DC	Hot-swappable
SG-6000-G2120	Dual	AC/DC	Fixed
SG-6000-M8860	Single/Dual	AC/DC	Hot-swappable
SG-6000-M7260	Single/Dual	AC/DC	Hot-swappable
SG-6000-M3108	Single/Dual	AC/DC	Fixed
SG-6000-M3100	Single	AC	Fixed
SG-6000-M1600	Single	AC	Fixed
SG-6000-E2800	Single/Dual	AC/DC	Fixed
SG-6000-E2300	Single/Dual	AC/DC	Fixed
SG-6000-E1700	Single/Dual	AC/DC	Fixed
SG-6000-E1600	Single	AC	External
SG-6000-E1100 (WLAN version)	Single	AC	External
SG-6000-E1100 (3G version)	Single	AC	External
SG-6000-E1100 (WLAN+3G version)	Single	AC	External

Table 1-29: Power Supplies of All Product Models

Power Module

Hillstone designs a model of pluggable module for SG-6000-G5150, SG-6000-M8860, and SG-6000-M7260. Both AC and DC power modules are available. You can choose the power type at your own choice.

The AC power module of SG-6000-G5150, SG-6000-M8860 and SG-6000-M7260 is shown in Figure 1-26; the DC power module is shown in Figure 1-27.

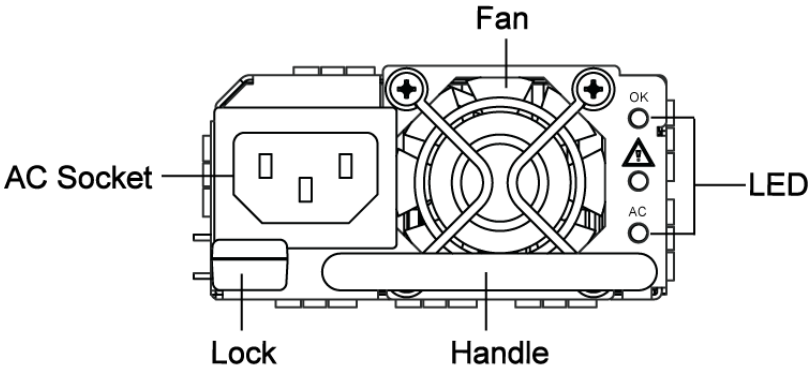

Figure 1-26: AC Power Module for SG-6000-G5150/M8860/M7260

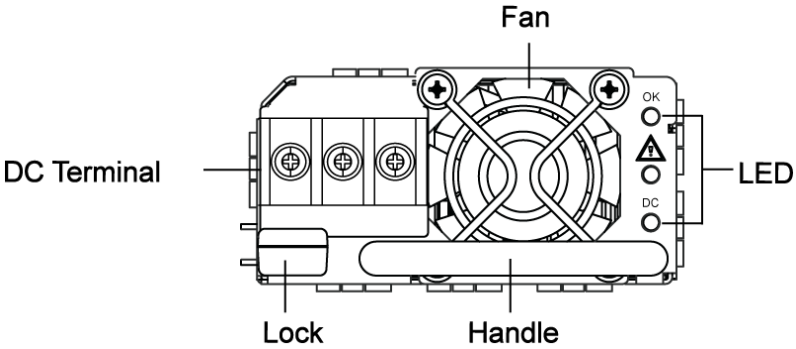

Figure 1-27: DC Power Module for SG-6000-G5150/M8860 /M7260

The power LED description for SG-6000-G5150, SG-6000-M8860, and SG-6000-M7260 is listed in Table 1-20.

LED	Color/Status	Description
OK	Green/Always on	Power module is functioning normally.
	Off	No power input.
⚠	Yellow/Always on	Power module has error.
	Off	Power module is functioning normally.
AC	Green/Always on	AC power module is functioning normally.
	Off	AC power module is powered off or has failed.
DC	Green/Always on	DC power module is functioning normally.
	Off	DC power module is powered off or has failed.

Table 1-30: Power Supply Module LED Descriptions

For information on power module installation and replacement, see Installing and Removing the Power Supply Module.

Expansion Modules

SG-6000-G5150, SG-6000-G2120 SG-6000-M8860, and SG-6000-M7260 are designed with general expansion slots for expansion modules. The supported expansion module types may vary from platforms, specifically including interface module and storage module. The main functions of these expansion modules are:

- Interface module: Expands the number of ports.

- Storage module: Enlarges the hardware space for storing logs.

For detailed information about expansion modules, see *Hillstone Multi-core Security Appliance Expansion Modules Manuel*.

Chapter 2 Installation Preparations

Introduction

To prevent personnel injury and equipment damage, please carefully read all the safety warnings and cautions in this chapter before the installation.

Hillstone products are designed for indoor use. To ensure the normal operation and to prolong the service lifetime, the installation site must meet the following requirements:

Cleanness Requirements

Table 2-1 lists the dust concentration requirements in the equipment room.

Mechanical Active Material	Unit	Content
Dust particle	particle/m^3	≤3×104 (No visible dust on the table in 3 days)
Note: Diameter of dust particle≥5μm		

Table 2-1: Dust Concentration Requirements in the Equipment Room

ESD Prevention

To prevent electrostatic discharge (ESD) damage, ensure that:

- The appliance is well grounded. The grounding screw is properly grounded.
- Take dustproof measures for the equipment room.
- Maintain proper humidity and temperature levels.
- Do not disassemble the equipment without permission from the vendor, or you may cause danger and void your warranty.

EMI Prevention

All possible electromagnetic interference (EMI) sources, external or internal, can affect the security appliance by capacitance coupling, inductance coupling, electromagnetic radiation, and common impedance coupling (including the grounding system).

To prevent or reduce EMI:

- Take measures to protect the power system from power interference.
- It's better to separate the floor where the security appliance is installed from the grounding device and lighting-proof device of the power source.

- Keep the security appliance away from radio stations, radar, and other high-frequency and high-current devices.
- Use electromagnetic shielding when necessary.

Grounding Requirements

To use the security appliance more safely:

- Ensure that the grounding screw of the chassis is well grounded via the grounding wire.
- Ensure that the grounding pin of the power plug is well grounded.

Workbench Requirements

Before the installation, ensure your workbench is properly prepared as follows:

- Make sure that you provide adequate space near the intake and exhaust vents of the appliance for heat dissipation.
- Make sure the rack is equipped with a good ventilation system.
- Make sure the rack is strong enough to support the weight of a fully equipped appliance.
- Make sure the rack is well grounded.

Other Safety Recommendations

The directions below are also recommended for you to follow:

- Keep the appliance far away from moist areas and heat sources.
- Wear an ESD wrist strap correctly when handling the appliance.
- Be careful with laser emission. Do not directly stare into apertures of fiber-optic connectors that emit laser radiation.
- Use uninterrupted power supply (UPS).

Unpacking

Verify the parts received according to your purchasing contract and packing list to ensure that you have received all the items necessary. If you have any problem, please contact your sales representative.

Installation Devices/Tools/Cables

A Hillstone security appliance is shipped with a power cable and a console cable, and you should have the following items before the installation:

- Terminal: Configuration terminal (e.g. an ordinary PC).

- Tools: Philips screwdrivers and ESD wrist strap.
- Cables: Power cable, console cable and Ethernet cable.

Chapter 3 Installation

Before Installation

A yellow seal with dark ink characters is stuck on a mounting screw of the chassis. Keep the seal intact. The sales representative will check this seal before maintenance operation. Please get the permission of your sales representative before opening the chassis yourself. Warranty will be void if you disassemble the chassis without authorization.

Before installation, make sure that:

- You have read Chapter 2 Installation Preparations carefully.
- The requirements in Chapter 2 Installation Preparations are satisfied.

Hillstone products can be installed:

- On a workbench
- On a standard 19-inch rack

Installing the Appliance on a Workbench

Hillstone product can be placed on a stable and clean workbench. For skid prevention, take the following steps to fit anti-skid pads on the appliance before installing:

Step 1: Tear off the sticker from the rubber pad.

Step 2: Press the sticky side of the pad to the right-angle die-pressed mark on the bottom panel of the chassis. See Figure 3-1.

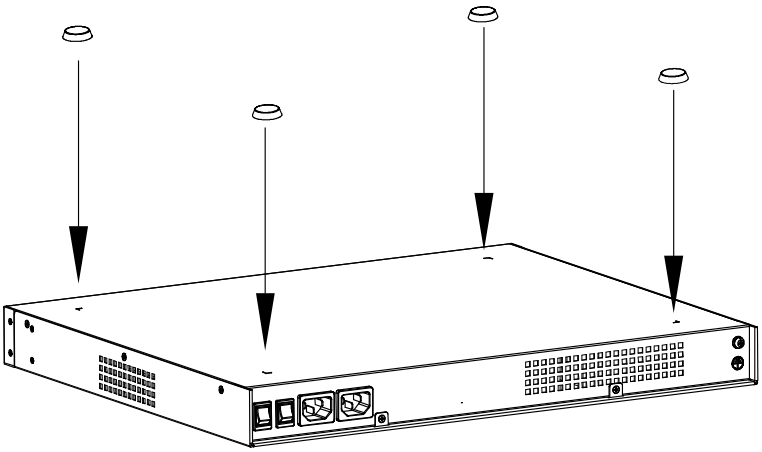

Figure 3-1: Installing the Rubber Pads

Check the following specifications when installing the appliance on a workbench:

- Make sure the workbench is stable and well grounded.

- Make sure the intake and the exhaust vents are unblocked, and keep the appliance well ventilated.
- Do not place any heavy object on the top of the chassis.

Installing the Appliance on a Rack

Before mounting the appliance on a rack, ensure that the power is off, and the rack is stable enough and well grounded. Hillstone multi-core security appliances are designed for a 19-inch standard rack.

To mount the chassis on a rack:

Step 1: Attach rack-mounting ears to the left and right side panels of the chassis respectively, and then fasten the rack-mounting ears with suitable screws, as shown in Figure 3-2.

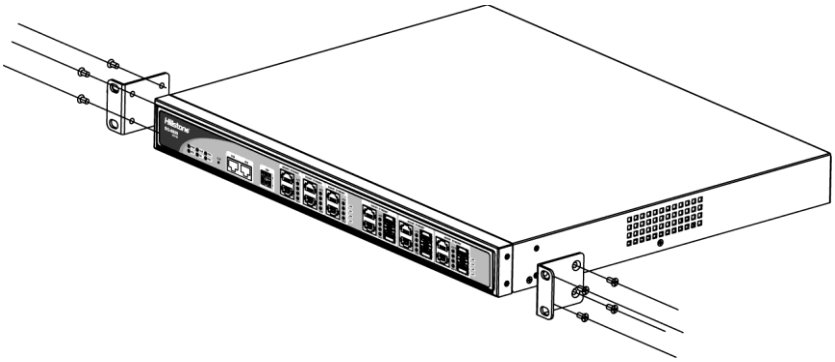

Figure 3-2: Installing the Rack-mounting Ears (1U Chassis as example)

Step 2: Take out screws from the accessory box and fasten the rack-mounting ears of the chassis in the rack with the screws. Keep the center of the rack-mounting ear and the center of the rack hole horizontally even, as shown in Figure 3-3.

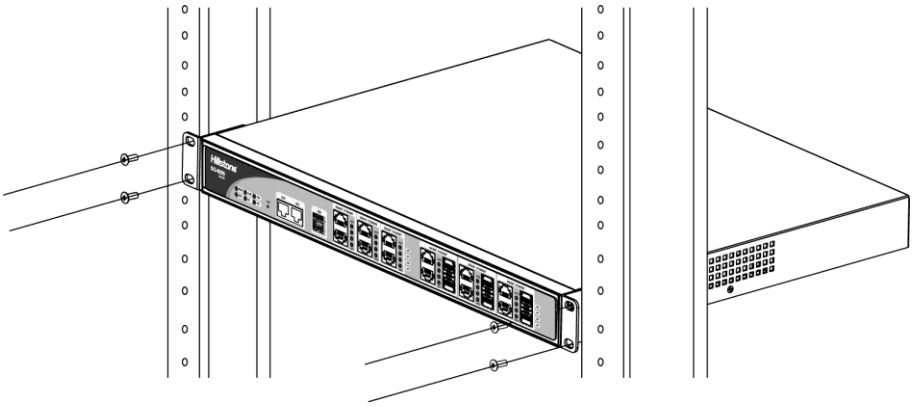

Figure 3-3: Installing the Appliance in a Rack (1U Chassis as example)

Cautions:

- The rack-mounting ears cannot bear weight. Make sure the chassis is supported by the platform under it when mounted into a rack.
- For better ventilation, there should be a clearance space between two equipments.

- If the rack accommodates only one device, put the device on the bottom.
- The floating nuts in the accessory box can only fit in the 9mm x 9 mm squared holes of standard racks and they can be used when no original rack nuts are available.

Connecting Cables

This section describes how to connect cables to the appliance, including connecting the ground wire, the console cable, the Ethernet cable and the power cable.

Connecting the Ground Wire

To meet safety requirements, you must correctly connect the grounding screw on the chassis to the earth ground by a grounding wire. The grounding resistance should be less than 5Ω.

Warning: The correct connection of the ground wire on the chassis is an essential safeguard against lightning shocks and interference. You must properly connect the ground wire when installing and using the appliance.

Connecting the Console Cable

Hillstone multi-core security appliance provides an RS-232C asynchronous serial console (CON) port, through which you can configure the appliance. The console cable is an 8-core shielded cable, which has an RJ-45 connector that can be connected to the Console port of the appliance and a DB-9 (female) connector that can be connected to the serial port of a console terminal.

Perform the following steps to connect the appliance and the console terminal:

1. Select a console terminal. You may choose an ordinary PC or a standard ASCII terminal with an RS-232C serial port.
2. Connect the console cable. Connect the RJ-45 end of the cable to the Console port of the appliance, and then connect the DB-9 connector of the cable to the console terminal.

Connecting the Ethernet Cable

Hillstone products provide 1000Mbps electrical Ethernet ports, SFP ports, XFP ports and Ethernet Combo ports (Electrical port + Optical port). The electrical Ethernet port can be connected by a straight-through cable (also called standard cable) or a crossover cable. The SFP port should use a SFP optical module, which can be connected with crossover cable or straight-through cable, or use a SFP electric module connected by a single-mode or multi-mode cable. The XFP port uses single-mode or multi-mode cables to access Ethernet.

All SFP Port and XFP Port optical modules of Hillstone products use LC-type optical connector; therefore, you should connect the optical modules using optical fiber ended with LC-type connector.

Follow the guidelines below when connecting cables to the ports:

- Be careful not to connect the Ethernet port to the wrong ports. Read the label above the port carefully.
- For electrical Ethernet connection, use crossover cable or straight-through cable.
- For SFP port connection, the optical module should be inserted into SFP port before installing the LC-type connector to the optical module; the copper SFP module should be connected by crossover cable or straight-through cable.
- For XFP ports, insert the XFP optical module into the XFP port before connecting the LC-type connector to the module.

Keep the followings in mind when connecting fiber cables:

- The curvature radius should be greater than 10cm. Avoid excessive bending of the cable.
- Ensure the Tx and Rx ends are connected correctly.
- Keep the connector of the optical cable clean.

Warning: Laser danger! To protect your eyes from radiation harm, do not stare into a cable connector connected to a laser generator.

Connecting an AC Power Cable

The AC power cable is shipped with the chassis. Prepare a single-phase three-terminal power socket with a ground contact in advance. Normally, the ground contact of the power supply system in a building was buried during construction and cabling. Before connecting the AC input power cable, you must make sure that the power socket is well grounded.

To connect the AC power cable, take the following steps:

1. Make sure the ground wire is reliably connected to the earth ground.
2. Make sure the power switch of the appliance is in the OFF position.
3. Connect the AC power socket of the power source using the AC power cable. To connect more cables, repeat this step.
4. Power on the switch of the appliance.
5. Check PWR LED on the front panel. A shining LED indicates correct connection.

Note: If a product does not have a power switch, you can skip Step2 and Step4.

Connecting a DC Power Cable

To power the appliance with DC power source, use DC power cables to connect the appliance and the external DC power source. Hillstone does not provide DC power cables.

Warning: Before performing the procedure, ensure that the cable is not connected with any power source and make sure the cables will not be powered on during the process.

To connect the DC power cable to the appliance, take the following steps:

1. Ensure that the power source voltage is in accordance with required voltage specified in System Parameters.
2. Switch off the power source.
3. If the terminal on the power supply module has a plastic cover, remove the cover and keep it.
4. Connect the grounding screw (labeled with "⏚") to the ground contact point using a grounding wire.
5. Use DC cables to connect the "+" terminal of the appliance to the "+" terminal of the power source, and "-" terminal to the "-" terminal of the source.
6. Verify the connection is correct and fasten the cables using a screwdriver.
7. Recover the plastic cover(s) to the original terminal(s).
8. To connect more DC power cables, repeat Step3 to Step7.
9. Switch on the power supply module.
10. Switch on the power source and check if the PWR LED is on. A shining LED indicates correct connection.

Connecting a Power Adapter

To provide the power supply, connect the power adapter of the security appliances with the external AC power supply as follows:

1. Insert the DC output plug of the power adapter into the AC power interface at the back panel of the security appliance.
2. Connect the power adapter to the external AC power supply.

Installing an Antenna

To use the WLAN function or the 3G function of the device, you must install the WLAN antenna or the 3G antenna. You can adjust the angle of the WLAN antenna by rotating it. The angle of the 3G antenna is fixed. The antennas are shown as below:

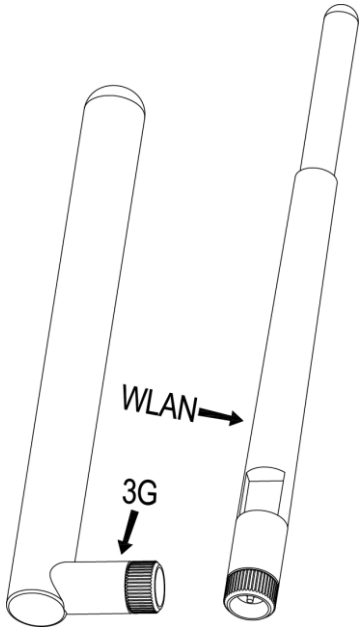

Figure 3-4: 3G Antenna and WLAN Antenna

To install antennas for SG-6000-E1100 (WLAN version), SG-6000-E1100 (3G version), or SG-6000-E1100 (WLAN+3G version), take the following steps:

1. According to the function you use, select the corresponding antenna.
2. Install the antenna to the SMA connector at the back panel of the device by rotating the antenna clockwise.

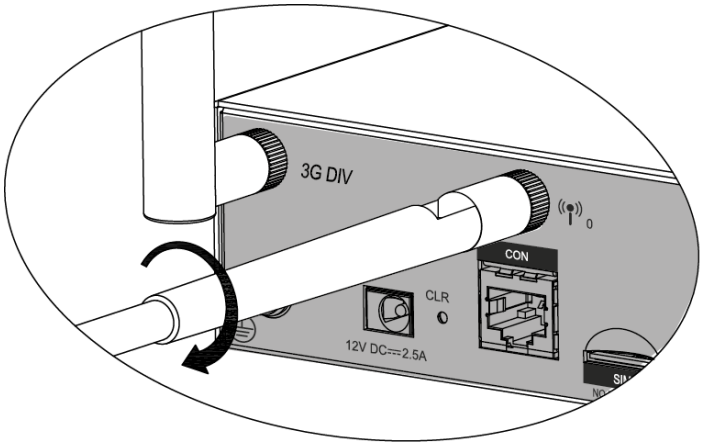

Figure 3-5: Antenna Installation Illustration

Note: Each type of antenna must be installed into the corresponding SMA connector. The 3G antenna must be installed into the connector of 3GDIV and 3GMAIN. The WLAN antenna must be installed into the connector of 0 and 1.

Installing the SIM Card

To install the SIM card for SG-6000-E1100 (3G version) or SG-6000-E1100 (WLAN+3G version), take the following steps:

1. Purchase the SIM card from the ISP and activate the data connection service.

2. Insert the SIM card into the SIM card slot at the back panel of the device.

Notes:

- The security appliance of SG-6000-E1100 (WLAN version) only supports the external 3G data card. Before using the 3G function, insert the 3G data card with a SIM card into the USB port at the back panel of the device.
- SIM card cannot be hot-swappable. Before installing or replacing the SIM card, power off the device. After installing the SIM card, you can power on the device.
- 3G data card and SIM card must match the network type.

Verifying Installation

After you complete the installation with all the above steps, you still need to verify the following items.

- All the cables are properly connected.
- The grounding wire of the appliance is correctly connected.
- The air vents on both side panel of the appliance are unblocked, and there is enough space around for heat dissipation.
- The expansion modules, power supply modules and fan tray are correctly installed (for some products).
- The power source meets the requirements of the appliance.
- If the appliance is rack-mounted, make sure the rack is stable enough. If the appliance is placed on a workbench, make sure the workbench is stable and clean.

Chapter 4 Boot and Configuration

Introduction

This chapter describes the initial system boot and basic configuration of Hillstone SG-6000 series, using a PC as the console terminal.

Establishing a Configuration Environment

Hillstone security appliances support both local and remote configuration. Administrators can use the following configuration methods.

- Console (CON) connection
- WebUI
- Telnet or SSH

Console (CON) Connection

For initial system configuration, you have to establish a Console connection environment (connect the device to a configuration terminal through its Console port).

To connect the PC to the CON port of the firewall, take following steps:

1. Set up a local configuration environment. Connect the Console port to the serial port of a PC through a console cable, as shown in Figure 4-1:

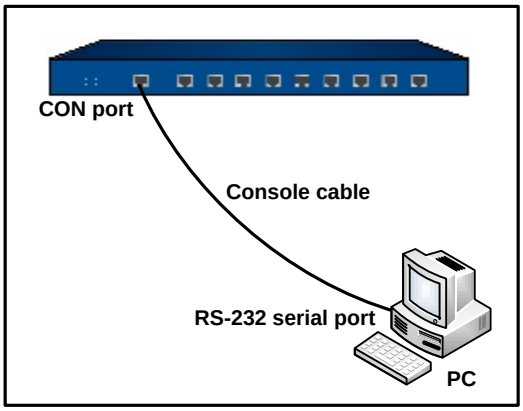

Figure 4-1: Console Port Configuration

2. Run the terminal emulation program on the PC (e.g. hyper terminal of Windows XP/Windows 2000) to set up a connection. Set the parameters of the terminal session to 9600bps, 8 data bits, 1 stop bit, none parity, and none flow control, as shown in Figure 4-2:

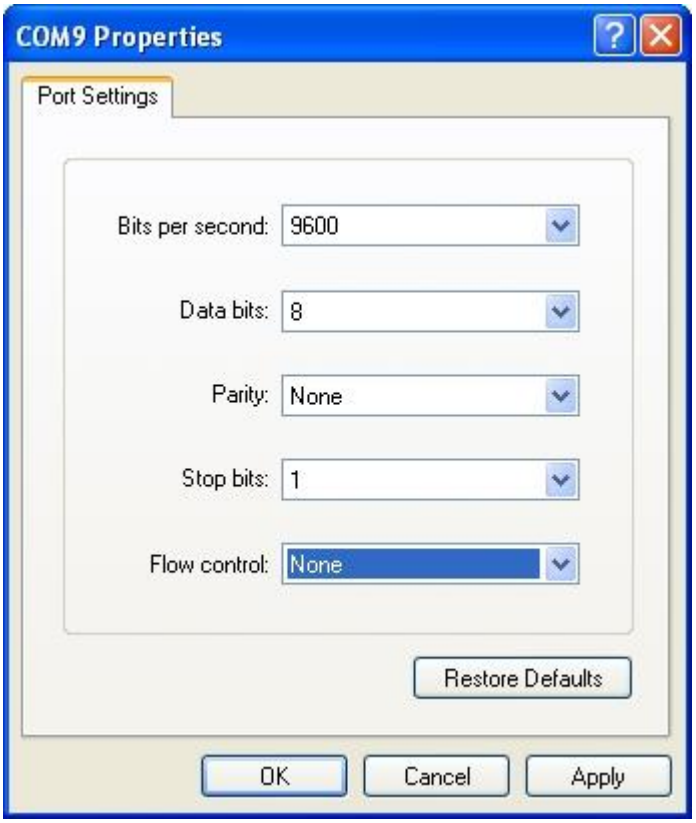

Figure 4-2: Setting Parameters for the Terminal Session

3. Switch on the power supply, and the appliance performs self-test and initializes the configuration automatically. If the booting succeeds, the system will display the command line prompt "login". Enter the default administrator name and password "hillstone" at the "login" and "password" prompts, press "Enter". And now you are successfully logged in and accessing the CLI.

4. Enter commands to configure or view running status. Enter a question mark "?" to get help on commands whenever you want.

WebUI

The ethernet0/0 (e0/0) port has a default IP address of 192.168.1.1/24, and all the management functions of this port are enabled by default. Administrators can access the WebUI through e0/0.

To log in the appliance's WebUI, take the following steps:

1. Set up the IP address of the management PC on the same subnet as **192.168.1.1/24**. Connect the management PC to the e0/0 port through an Ethernet cable.

2. Launch a Web browser of the management PC, enter the URL **http://192.168.1.1** in the address bar, and then press Enter.

3. Enter the default administrator name and password "hillstone" in both the **Login** and **Password** text boxes.

4. Click the **Login** button to enter WebUI main page. Then you can set other configurations to the appliance.

Tenet and SSH

You can also establish Telnet and SSH configuration environments. For more information, please see *Hillstone Multi-core Security Appliance User Guide*.

Basic Configuration

Before you begin to use the security appliance, you should be familiar with its features and your network deployment. Different device position in the network requires different topology design, working mode and policy configuration.

The basic configurations may include:

1. Create security zones, including the link layer (L2) and network layer (L3). Bind different interfaces to correct security zones respectively.
2. Assign IP addresses to interfaces.
3. Configure the management functions of the interfaces and create the security policy rules.
4. Assign proper network addresses and configure the NAT rules as needed.
5. Keep network connectivity by configuring routes.
6. Configure security policy rules between security zones.
7. Configure network parameters, such as DHCP and DNS agent, etc.

For more information, see *Hillstone Multi-core Security Appliance User Manual*.

Chapter 5 Hardware Maintenance and Replacement

Introduction

This chapter explains how to install and remove the power supply module, the expansion module and the fan tray.

Installing and Removing the Power Supply Module

This section describes how to install and remove the power supply module of SG-6000-G5150, SG-6000-M8860, and SG-6000-M7260. Take the following steps to install or remove the power supply module:

Installing/Removing the Power Supply Module (G5150/ M8860/ M7260)

To install a power supply module to SG-6000-G5150, SG-6000-M8860, or SG-6000-M7260, take the following steps:

1. Ensure that the power supply module to be used is not connected to any power source.
2. Face the back panel of the appliance.
3. If the power supply slot is covered by blank plate, remove the plate first (unscrew the screws on the blank plate and take it down). Skip this step if the slot is not covered.
4. Slide the power supply module all the way into the slot cage until you feel resistant.

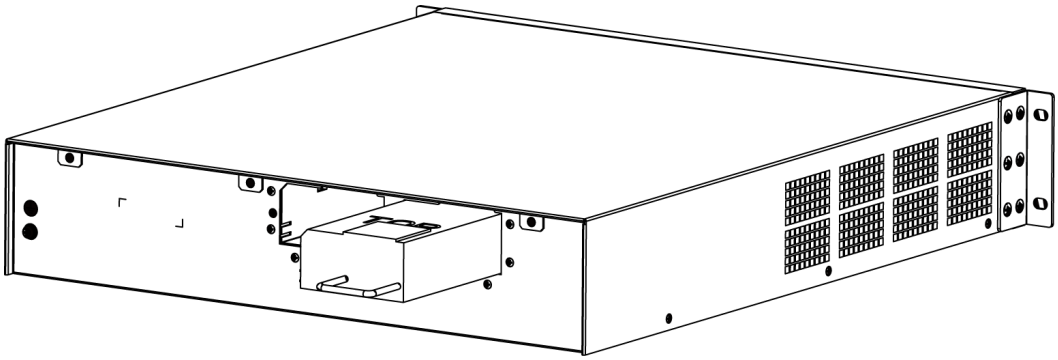

Figure 5-1: Installing Power Supply Module of SG-6000-G5150 /M8860/ M7260

To remove the power supply module:

1. Make sure the power supply module to be used is not connected to any supply source.
2. Face the back panel of the appliance.
3. Pull the power supply straight out of the chassis using the provided handle.

Installing and Removing the Expansion Module

SG-6000-G5150, SG-6000-G2120, SG-6000-M8860, and SG-6000-M7260 can accommodate expansion modules. This section describes how to install and remove the expansion module.

To install an expansion module:

1. Make sure the power is switched off and you should wear the ESD strap properly.
2. Face the front panel of the appliance.
3. Remove the blank plate on the expansion slot if necessary.
4. Slide the expansion module to be used into the slot until you feel resistant.
5. Tighten the screws on the expansion module.

To remove an expansion module:

1. Make sure the power is switched off and you should wear the ESD strap properly.
2. Face the front panel of the appliance.
3. Loosen the screws on the expansion module.
4. Pull the expansion module straight out of the chassis by holding the screws.

Note: Apply a blank plate to cover the slot where no expansion module is installed.

Installing and Removing the Fan Tray

SG-6000-G5150, SG-6000-M8860 and SG-6000-M7260 are designed with hot-swappable fan trays.

To install a fan tray:

1. Hold the fan tray and insert it straight into the chassis until you feel resistant.
2. Tighten the screws on the fan tray.

Note: Check the FAN LED indicator when the appliance is powered on. A constant green shining light indicates that the fan is functioning normally.

To remove a fan tray:

1. Loosen the screws on the fan tray.
2. Pull the fan tray out of the chassis by holding the provided handle.

Note: To avoid over-heating, insert a replacement fan tray immediately after removing the existing one.

Chapter 6 Troubleshooting

Introduction

This chapter provides solutions to some common problems of Hillstone multi-core security appliances.

Losing the Administrator Password

If you lose the administrator password, please contact your local sales representative.

Troubleshooting Power System

Check the PWR LED on the front panel of the appliance. If the power supply is functioning normally, the PWR LED lights steadily in green color. If the LED is off, perform the following steps:

- Make sure the power supply cable is connected correctly.
- Ensure that the voltage of the power source conforms to the required voltage.

For the PWR LED information, see LED Indicators.

Troubleshooting the Configuration System

The Console configuration terminal shows system booting message when the appliance is powered on. If the configuration system has failed, it displays error information or nothing at all.

If the configuration terminal shows no information, perform the following steps:

- Make sure the power supply is correctly connected and powered on.
- Verify the Console cable is connected properly.
- Ensure the terminal configuration settings are correct.

If above steps reveal no error, the Console cable may be broken.

Copyright Information

Copyright © 2014, Hillstone Networks, Inc. All rights reserved.

Hillstone, Hillstone Networks logo, StoneOS, StoneManager, Hillstone PnPVPN, UTM Plus are trademarks of Hillstone Networks.

All other trademarks or registered marks are the property of their respective owners. Hillstone Networks assumes no responsibility for any inaccuracies in this document. Hillstone Networks reserves the right to change, modify, transfer, or otherwise revise this publication without notice.

Hillstone Networks Website www.hillstonenet.com posts the latest information.

Warning:

This is a class A product. In a domestic environment this product may cause radio interference in which case the user may be required to take adequate measures.