MEMBER'S MARK

44" Electric Smoker

Model Number: SC21874XX-YY-ZZ

Assembly, Care and Use Manual

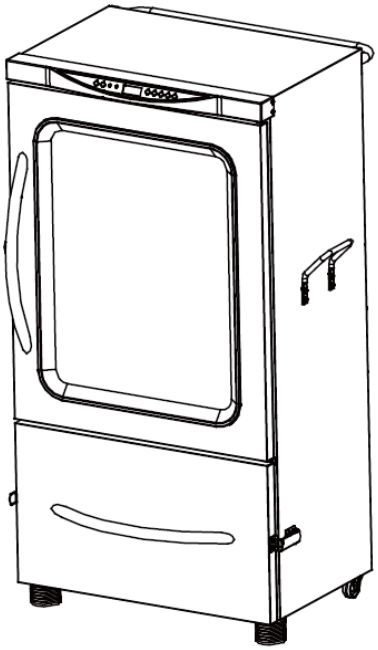

C US

This Product is for outdoor use only

- This instruction manual contains important information necessary for the proper assembly and safe use of the appliance.
- Read and follow all warnings and instructions before assembling and using the appliance.
- Follow all warnings and instructions when using the appliance.
- Keep this manual for future reference.
- Failure to follow these instructions could result in fire or explosion which could cause property damage, personal injury or death.

Should you encounter any problem,
CALL US FIRST.

DO NOT return product to the retail store!!

WE CAN HELP.

For assistance, contact customer service at **customerservice@rankam.com**
or at (888) 837-1380, Mon to Fri, 8:00am – 5:00pm Pacific Standard time

CSA CERTIFIED TO UL STANDARD 1026

WARNING

CARBON MONOXIDE HAZARD

- Burning wood chips gives off carbon monoxide, which has no odor and can cause death.
- DO NOT burn wood chips inside homes, vehicles, tents, garages or any enclosed areas.
- Use only outdoors in a well-ventilated space.

WARNING

Important Safety Instructions

When using electrical appliances, basic safety precautions should always be followed, including the following:

1. This appliance is used for outdoor only. Do NOT operate in an enclosed area.
2. Do NOT touch the hot surfaces.
3. To protect against electric shock, do not immerse cord, plugs or control panel in water or other liquid.
4. Keep monitoring when the appliance is used by or near children and pets. Keep children and pets away from the appliance at all times. Do NOT allow children to use this appliance.
5. Do NOT plug in the appliance until fully assembled and ready for use.
6. Unplug the appliance from outlet when not in use or before cleaning. Cool down before putting on or taking off parts, and before cleaning the appliance.
7. Use this appliance only on a level, stable surface to prevent tipping.
8. The appliance MUST be on the ground. Do NOT locate it on tables or counters. Do NOT move it across uneven surfaces.
9. Use only approved and grounded electrical outlet.
10. Do NOT operate the appliance with a damaged cord or plug, or after appliance malfunctions or has been damaged in any manner. Return appliance to our customer service center for examination, repair or adjustment.
11. Do NOT let cord hang over edge of table or counter, or touch hot surfaces.
12. Do NOT expose the appliance to rain or water at any time.
13. Do NOT place the appliance on or near a hot gas or electric burner, or in a heated oven.
14. Keep a fire extinguisher accessible while using the appliance.
15. Do NOT use fuel, such as charcoal briquettes or heat pellets for in this appliance.
16. Do NOT use this appliance as a heater (READ CARBON MONOXIDE HAZARD ABOVE).
17. This appliance is HOT when operating and will remain HOT for a period of time afterwards. Be caution when use.
18. Be careful when removing food from the appliance. All surfaces are HOT and may cause burns.
19. Do NOT allow anyone to conduct activities around the appliance during or following its use until the unit has cooled.
20. Use of alcohol, prescription or non-prescription drugs may degrade the user’s ability to properly

assemble or safely operate the appliance.

21. Do NOT move the appliance during use. Allow to cool down completely before moving or storing.
22. Do NOT bump or impact the appliance.
23. Wear protective gloves or use long and rigid cooking tools for supplementary use.

WARNING

GENERAL WARNINGS AND SAFETY INFORMATION

1. Do not cover cooking racks with metal foil. This will trap heat and damage the appliance.
2. Drip tray is only used at bottom of the drawer. Do not put it on the cooking racks and this may damage the appliance.
3. Wood chip tray is HOT when the appliance is in operation. Be caution when adding wood chips.
4. For disconnection, press “OFF” button on control panel then remove the plug from the outlet.
5. Make sure to unplug the appliance when not in use or before cleaning. Let the appliance cool completely before adding/removing racks or trays.
6. Dispose cold ashes by placing them in aluminum foil and soaking with water then discarding in a non-combustible container.
7. Do not store the appliance with HOT ashes inside. Store it only when all surfaces are cold.
8. Do not use accessory attachments which are not supplied by appliance manufacturer and it may cause injuries.
9. Do not use the appliance other than its intended purpose. This unit is not for commercial use.
10. Always use the appliance in accordance with all applicable local, state and federal fire codes.
11. Longer detachable power-supply cords or extension cords are available and may be used with care.
12. If a longer detachable power-supply cord or extension cord is used: 1. The marked electrical rating of the cord set or extension cord should be at least as great as the electrical rating of the appliance; and 2. The cord should be arranged so that it will not drape over the counter top or tabletop where it can be pulled by children or tripped over intentionally.
13. Extension cord must be a grounding type, 3-wire cord.
14. Outdoor extension cords must be used with outdoor use products and are marked with suffix “W” and with the statement “Suitable for Use with Outdoor Appliances”.
15. To reduce the risk of electric shock, keep extension cord connection dry and off the ground.
16. Take extreme caution when move the appliance containing with hot liquids.
17. Do not use a water sprayer or the like to clean the appliance.

WARNING

Combustion by-products produced when using this product contains chemicals known to the State of California to cause cancer, birth defects, or other reproductive harm.

WARNING

1. This appliance is for OUTDOOR USE ONLY.
2. This appliance is used for slow cooking. Please allow sufficient time for cooking.
3. Pre-season smoker prior to first use. Please refer to page 14.
4. Before loading food, pre-heat the appliance for 30 to 45 minutes at maximum temperature.
5. Do not cover racks with aluminum foil as this will cause inappropriate heat circulation.
6. Do not overload the appliance with food. Excess amount of food may trap heat. It will extend the cooking time and cause uneven cooking. Keep enough space between foods on racks to ensure proper heat circulation. If use cooking pan, place the pan at center of rack to obtain even cooking performance.
7. Keep air vent closing to maintain moisture and heat. If cooking foods such as fish or jerky, open the air vent to liberate moisture.
8. LCD readout for temperature on control panel will fluctuate + or - 10 to 15 degrees when smoking cycles on and off.
9. Store the appliance in a dry place after use.
10. Using the appliance at extreme cold temperatures may extend the cooking time.
11. CLEAN AFTER EVERY USE. This will help to extend the appliance life and prevent mold and mildew.

Specifications: Input power = 1200W, Voltage = 120V AC

Current = 10Amp, Frequency = 60Hz

COMPONENTS LIST

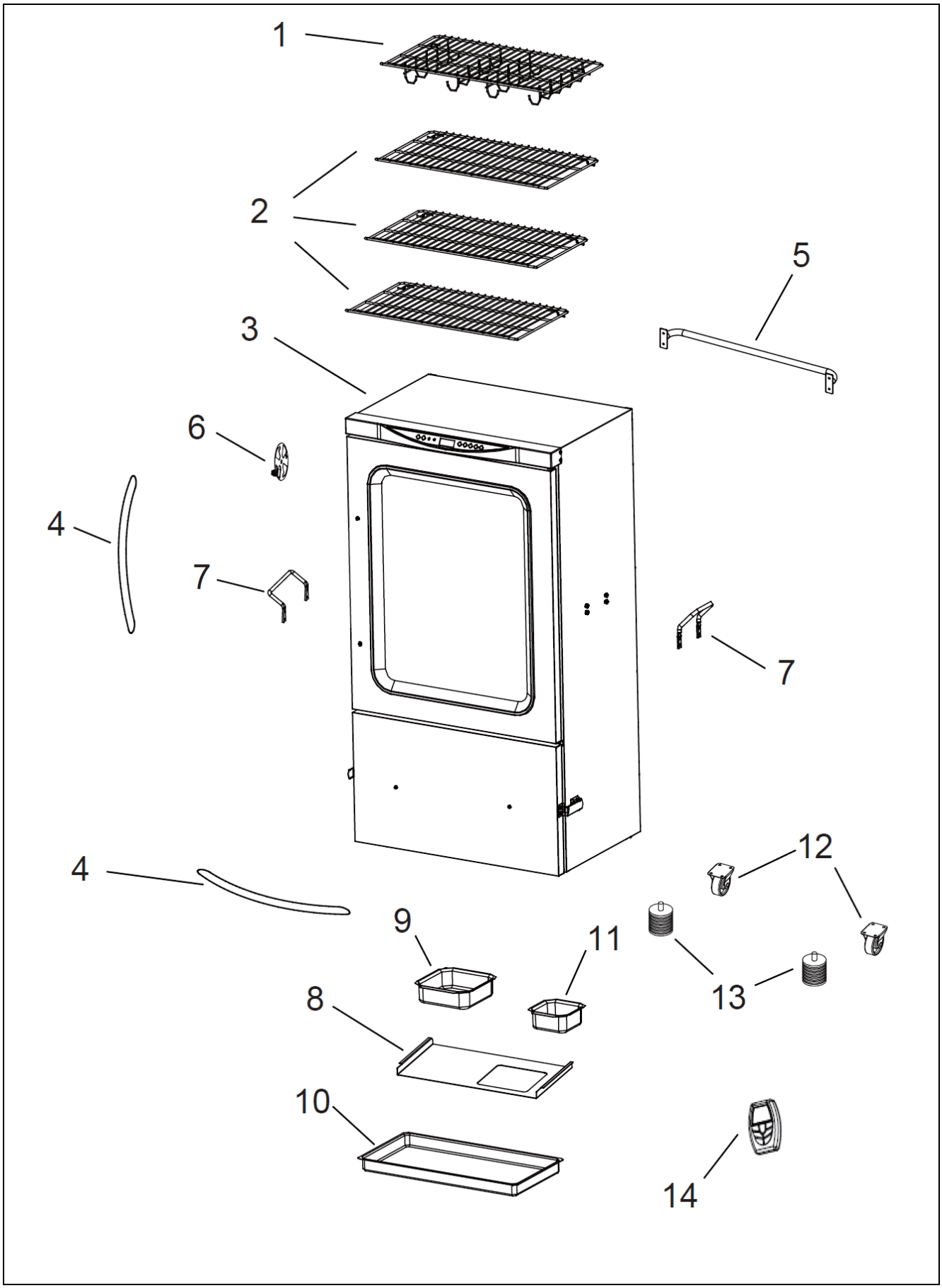

COMPONENTS LIST

1. Smoking grate with sausage hooks 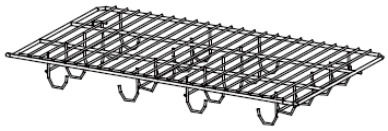 **Qty: 1pc**	**2. Smoking grates** **Qty: 3pcs**	**3. Smoker body assembly** 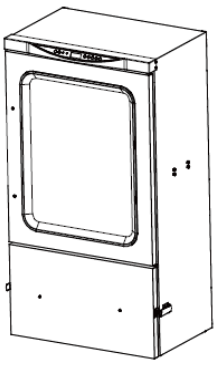 **Qty: 1pc**
4. Door/Drawer handles **Qty: 2pcs**	**5. Rear handle** **Qty: 1pc**	**6. Air vent** **Qty: 1pc**
7. Side handles **Qty:2pcs**	**8. Heat shield plate** 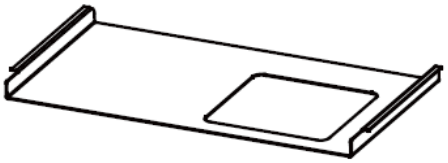 **Qty:1pc**	**9. Water tray** 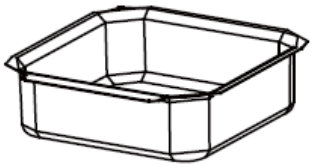 **Qty:1pc**
10. Drip tray **Qty:1pc**	**11. Wood chip tray** 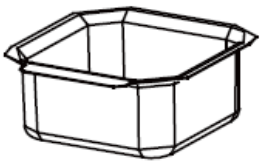 **Qty:1pc**	**12. Casters** **Qty:2pcs**
13. Supporting feet **Qty:2pcs**	**14. Wireless remote control** **Qty:1pc**	

HARDWARE LIST

Item No.	Item name	Diagram	Qty
A	M6x35 mm Bolt		4 pcs
B	M6x14 mm Bolt	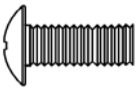	9 pcs
C	M5x12 mm Bolt		12 pcs
D	M6 Nut		1 pc
E	Φ6 Spring washer		1 pc
F	“AAA” Alkaline Battery (not included)	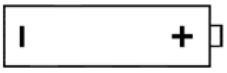	1 pc

Tools Required

Phillips screwdriver (not included)	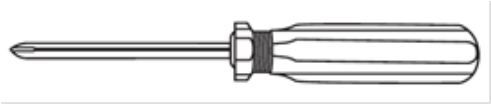

Replacement Part List (I)

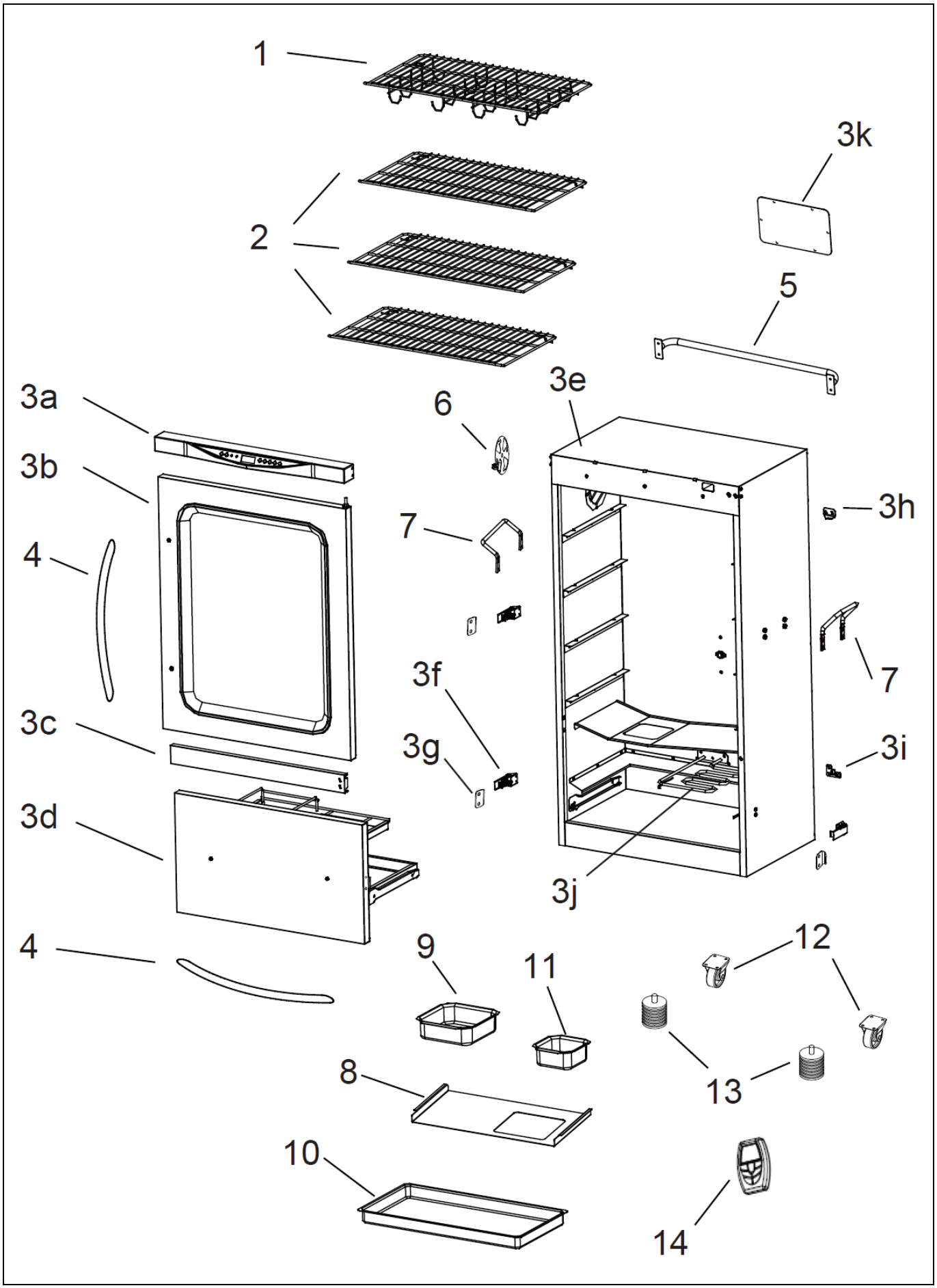

Replacement Part List (II)

Part Number	Part Name	Part Number	Part Name
1	Smoking grate with sausage hooks	2	Smoking grates
3	Smoker body assembly	3a	Smoker body – Control panel
3b	Smoker body – Door with glass	3c	Smoker body – Front supporting brace
3d	Smoker body – Drawer	3e	Smoker body
3f	Smoker body – Door/Drawer latch	3g	Smoker body – Door/Drawer latch bracket
3h	Smoker body – Upper door fixing bracket	3i	Smoker body – Lower door fixing bracket
3j	Smoker body – Heating element	3k	Smoker body – Protective cover
4	Door/Drawer handle	5	Rear handle
6	Air vent	7	Side handles
8	Heat shield plate	9	Water tray
10	Drip Tray	11	Wood chip tray
12	Casters	13	Supporting feet
14	Wireless remote control		

ASSEMBLY PROCEDURE

Step 1. Attach the **Supporting feet (13)** to the **Smoker body assembly (3)** by rotating in clockwise direction till stop. Attach the **Casters (12)** to the body by using 8 pcs of **M5x12mm bolts (C)** as shown below.

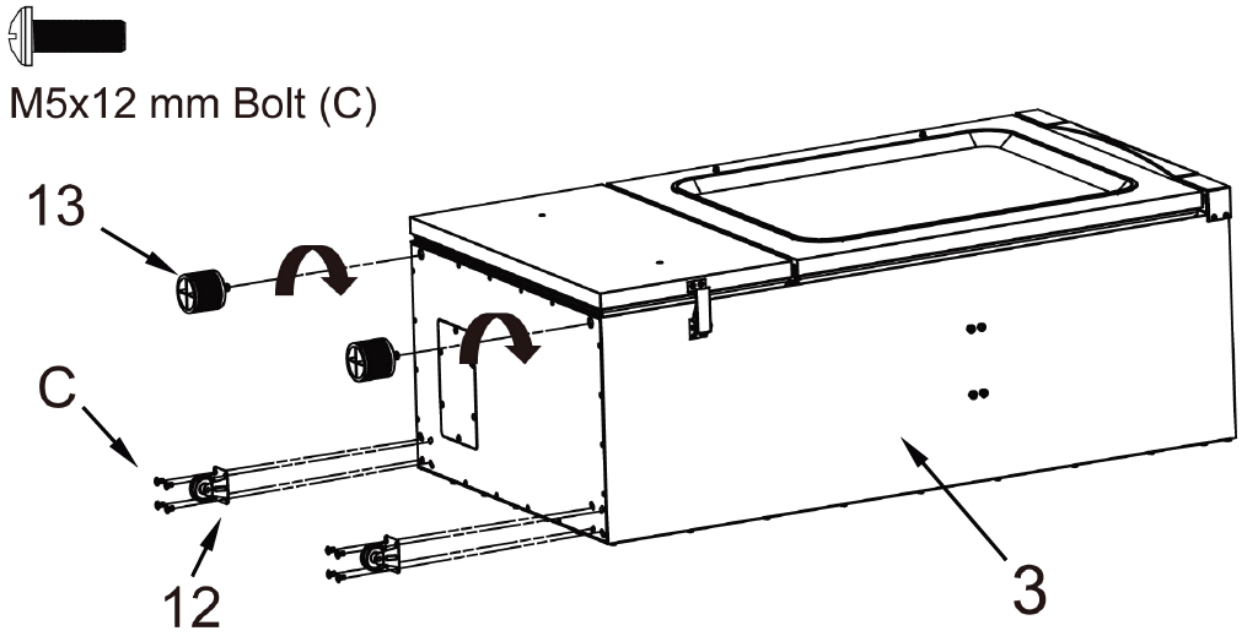

Step 2. Open the door and attach the **Door/Drawer Handle (4)** to it by using 2 pcs of **M6x35mm bolts (A)** as shown below.

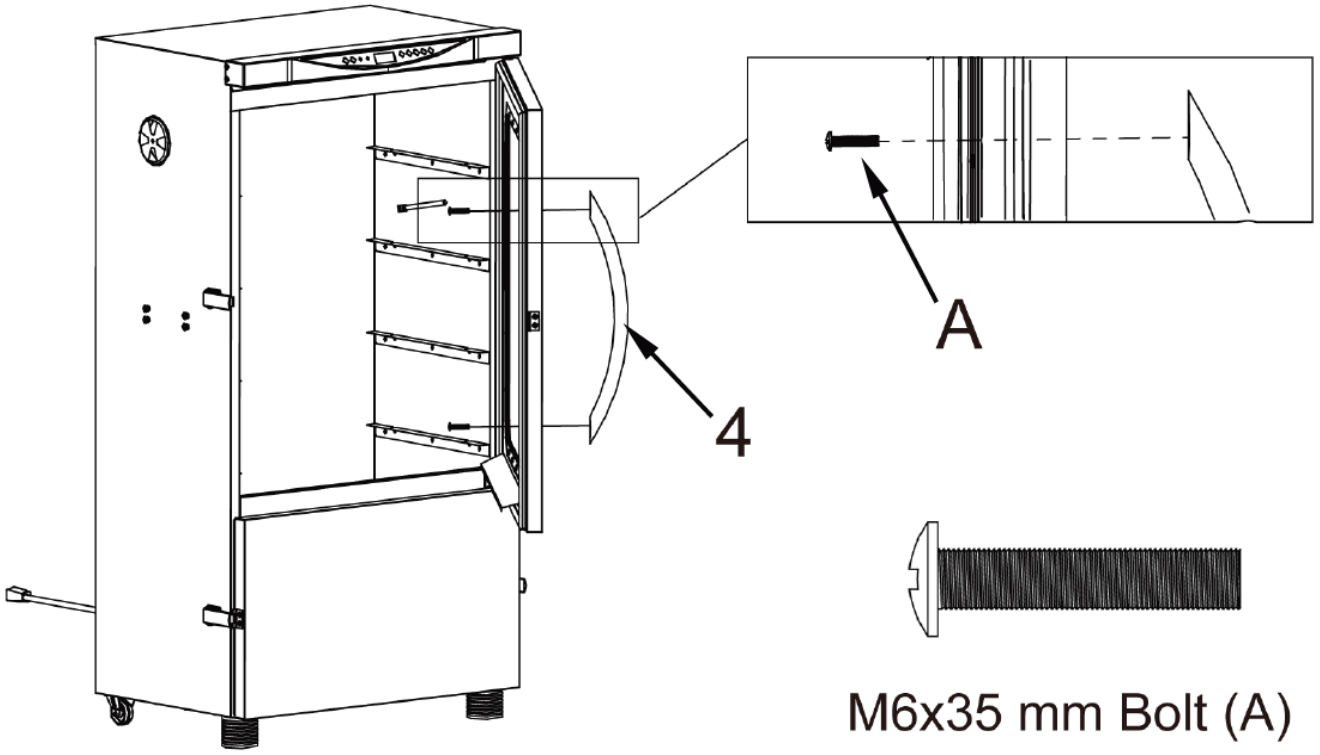

Step 3. Pull out the drawer from smoker body. Attach the **Door/Drawer Handle (4)** to the drawer by using 2 pcs of **M6x35mm bolts (A)** as shown below.

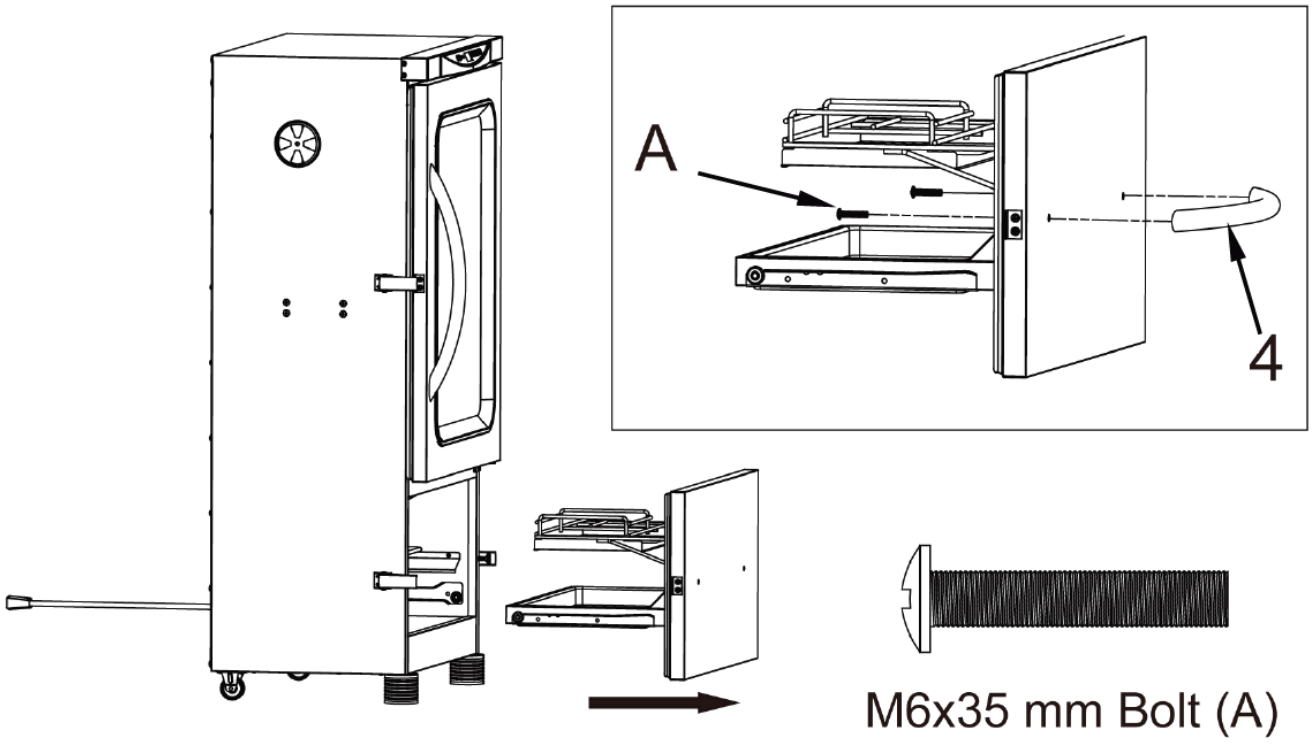

Step 4. Place the **Heat shield plate (8), Water tray (9), Drip tray (10)** and **Wood chip tray (11)** properly to the drawer as shown below.

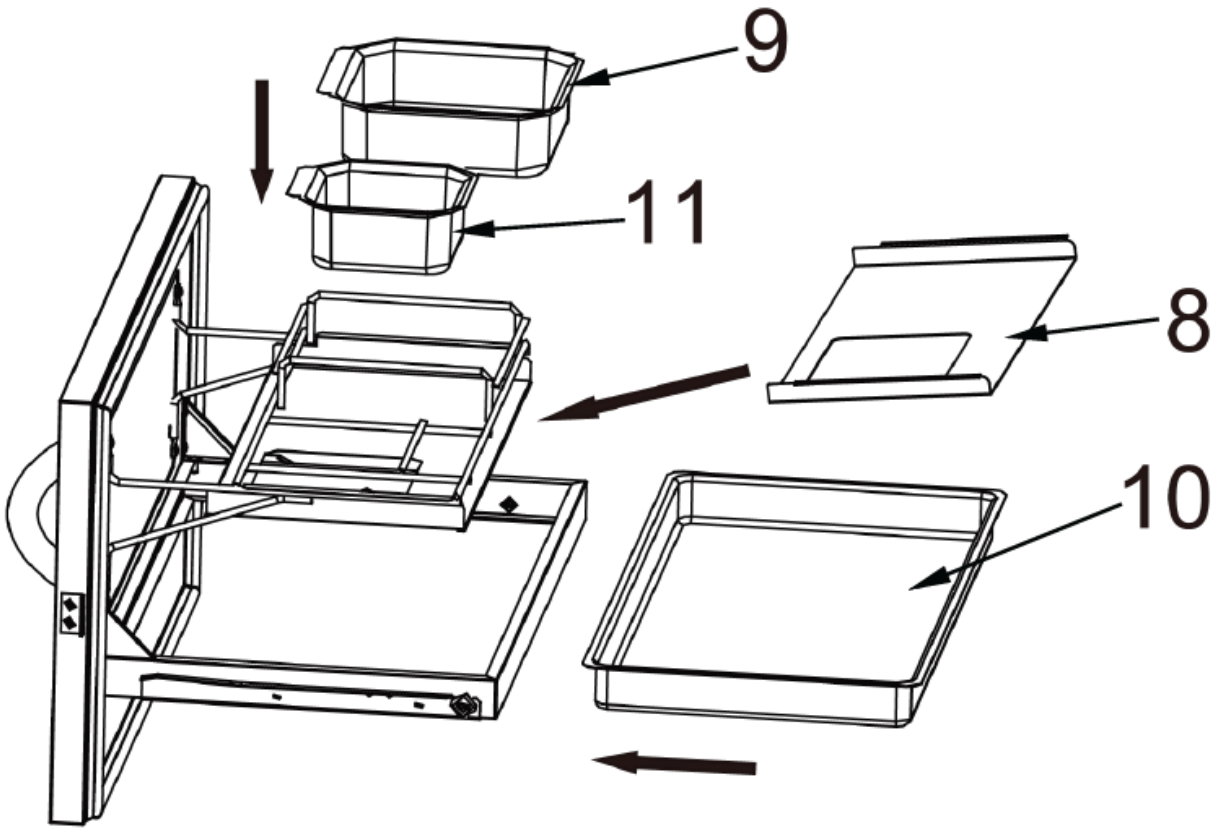

Step 5. Attach the **Air vent (6)** to the smoker body by using 1 pc of each for **M6x14mm bolt (B), Φ6 Spring washer (E)** and **M6 Nut (D)** as shown below.

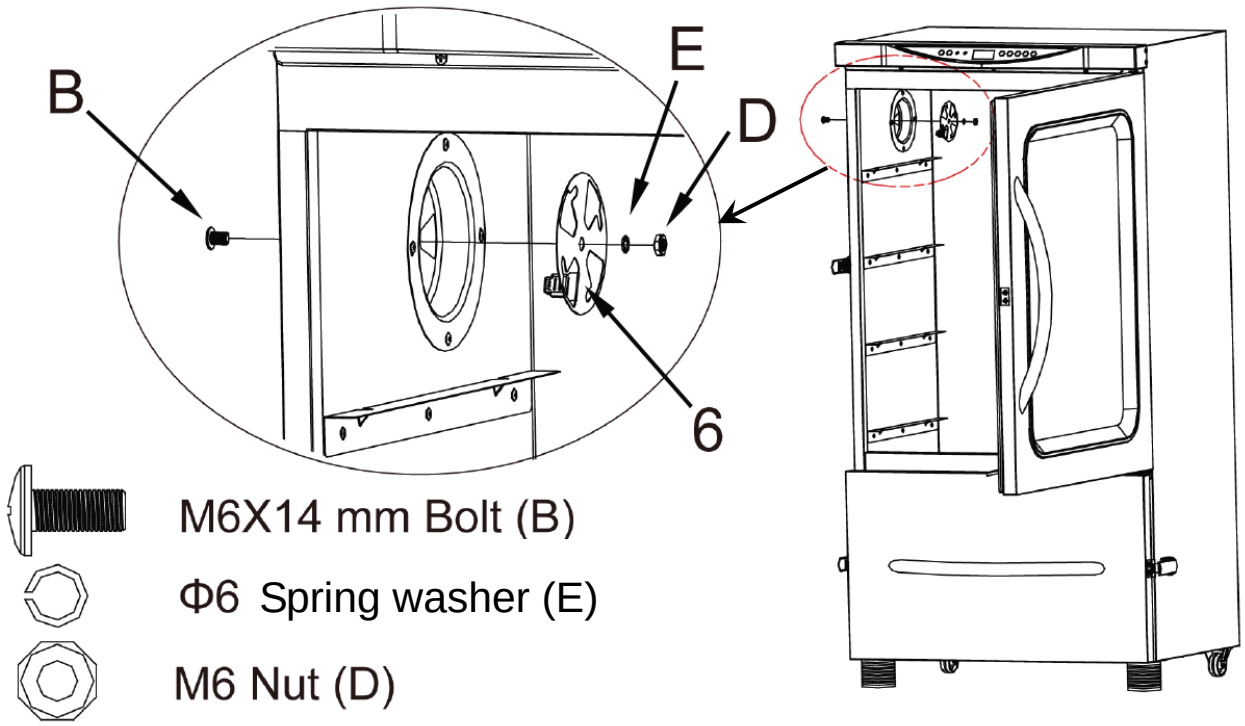

Step 6. Attach the **Side handles (7)** to the right and left side panel of the smoker by using 8 pcs of **M6x14mm bolts (B)** as shown below.

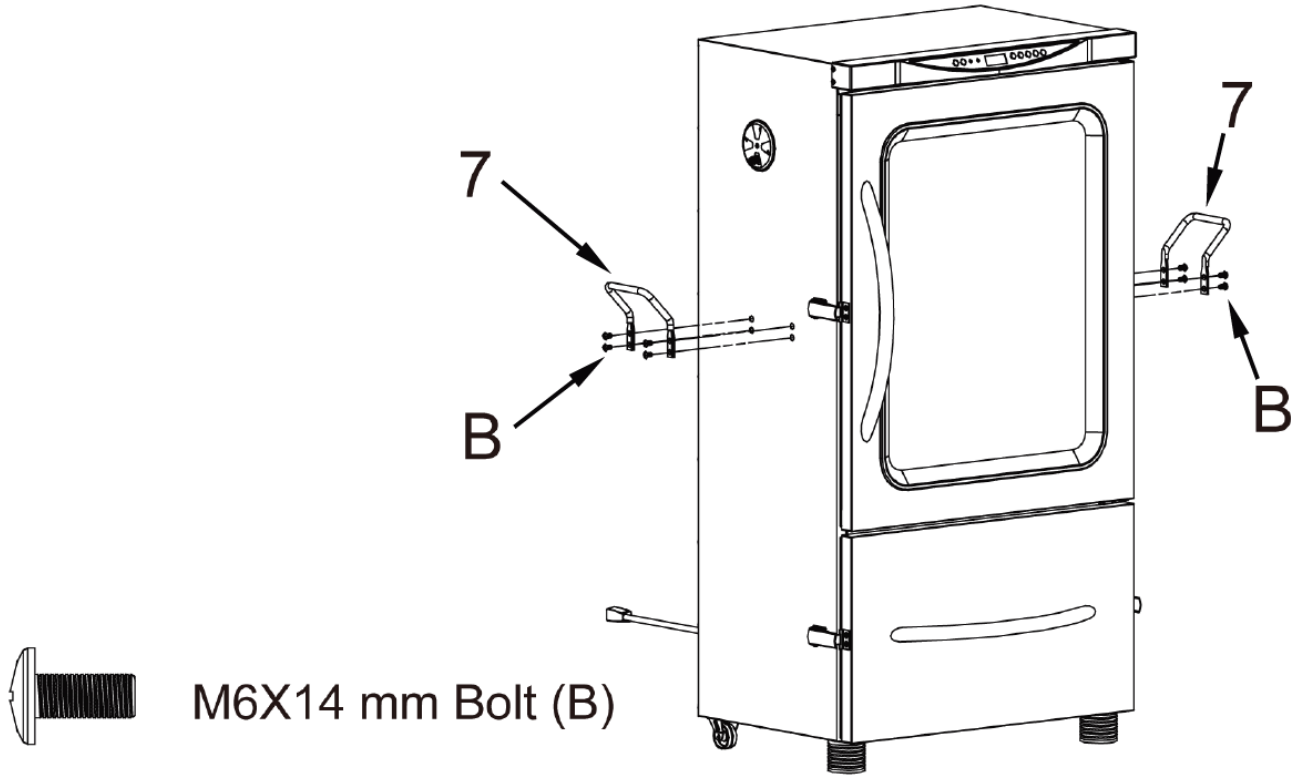

Step 7. Attach the **Rear handle (5)** to the back panel of smoker by using 4 pcs of **M5x12mm bolts (C)** as shown below.

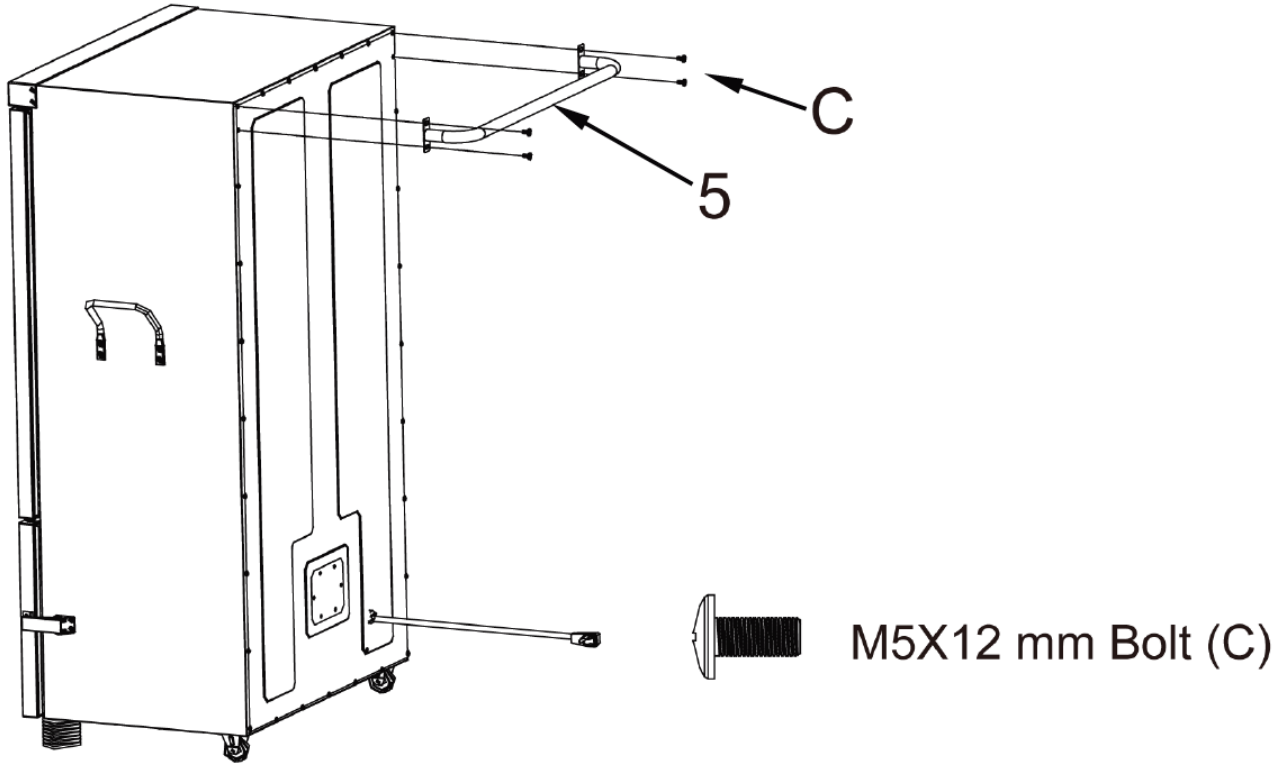

Step 8. Place 3 pcs **Smoking grates (2)** and 1pc **Smoking grate with hook (1)** into the inner of smoker body and locate them in the grate holding brackets as shown below.

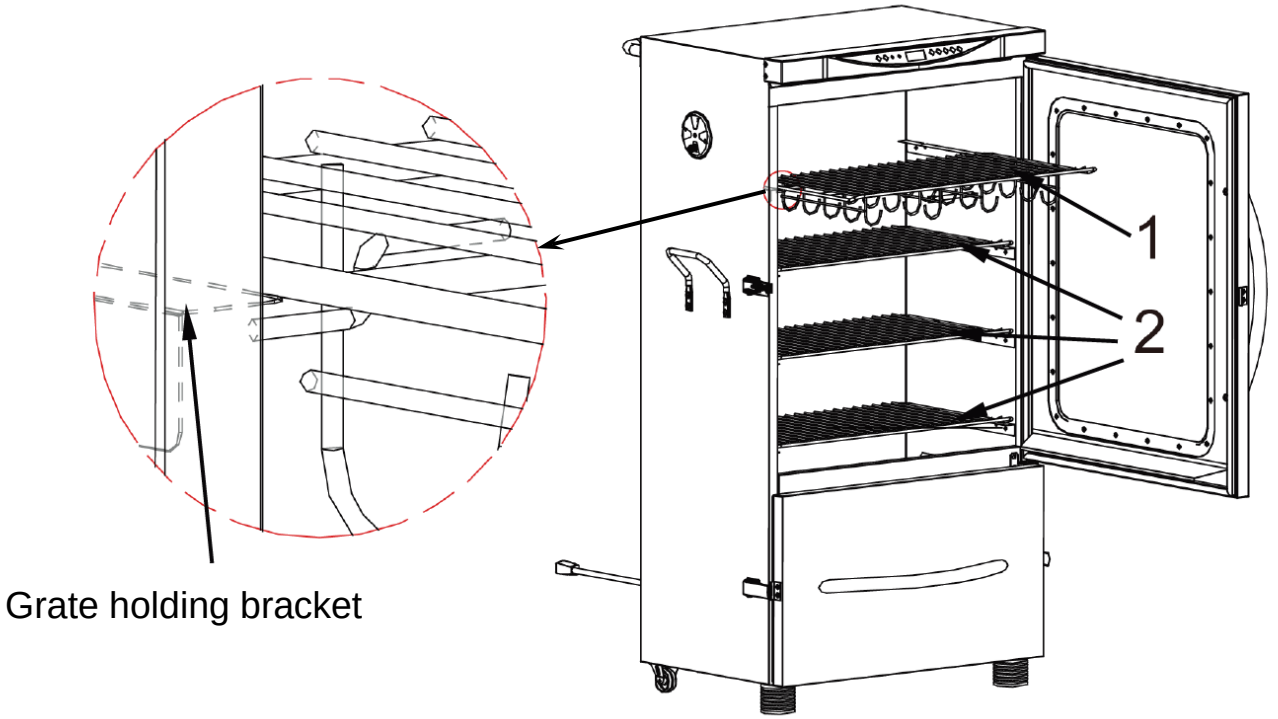

INSTRUCTIONS FOR PRE-SEASON:

UNIT NEEDS TO PRE-SEASON PRIOR TO FIRST USE.
Smoke may generate during pre-season and it is normal.

1. Put water tray in place WITHOUT water.
2. Adjust temperature setting to 275°F (135°C) and operate for 3 hours. At the last 45 minutes, open the drawer to add half volume of wood chips in wood chip tray to complete pre-seasoning.
3. Switch off the unit and cool it down completely.

HOW TO USE AND SET CONTROL PANEL & REMOTE CONTROL:

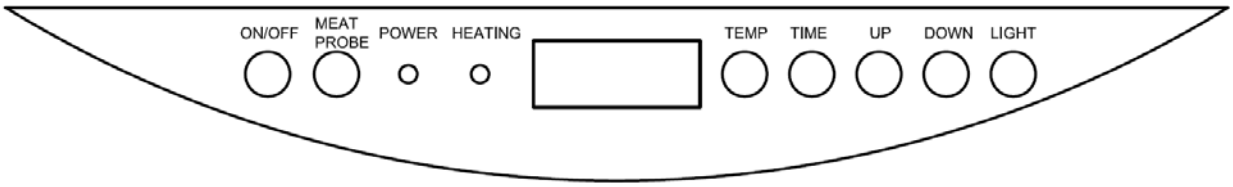

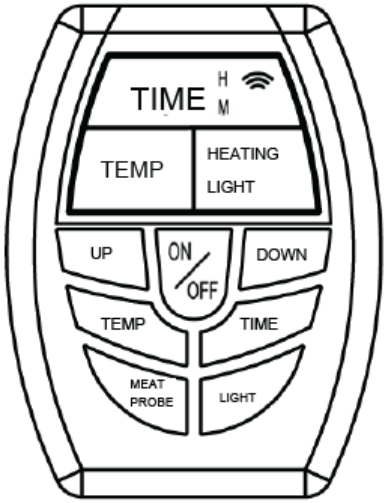

How to set temperature:

- Press ON/OFF button.
- Press and hold TEMP button until LED display start to blink.
- Press UP or DOWN button to set your desired temperature.
- Press TEMP button again to complete your temperature setting.

Note: Operation will not begin until timer has been set.

How to set timer:

- Press and hold TIME button until hour digit in LED display start to blink.
- Press UP or DOWN button to set your desired operating hour.
- Press TIME button again to complete hour setting. Then minute digit will start to blink.
- Press UP or DOWN button to set your desired operating minute.
- Press TIME button again to complete minute setting and start cook cycle.

Note: Operation will stop when time has expired.

How to use meat probe:

- Insert the meat probe into center of meat to get more accurate temperature reading.
- Press and hold MEAT PROBE button until LED display show the temperature of meat inside.
- When MEAT PROBE button is released, LED display will resume to smoking temperature or counting time.

How to use light:

- Press LIGHT button to switch the light on.
- Press LIGHT button to switch the light off.

How to RESET control panel:

If LED display shows an error message, follow below steps to reset the control panel:

1. Switch the unit off,
2. Unplug the unit from outlet,
3. Wait for ten seconds,
4. Plug the unit back into outlet,
5. Switch the unit on.

How to replace batteries for remote control:

1. Turn the remote control to back side. Remove the belt clip by sliding it to leftwards.

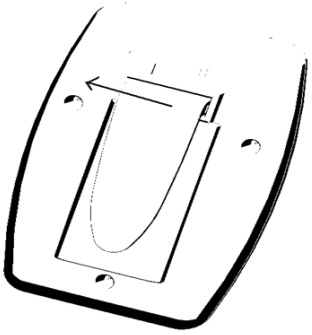

2. Press the tab of battery cover down then pull the cover out.

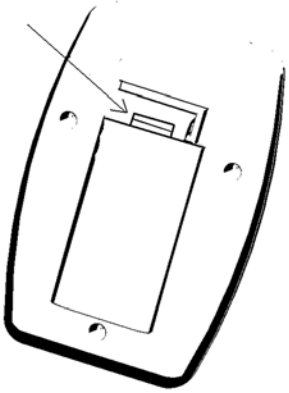

3. Install 2pcs new “AAA” Alkaline batteries. Make sure the positive (+) and negative (-) polarities of the batteries matching with the symbols engraved on the battery apartment.

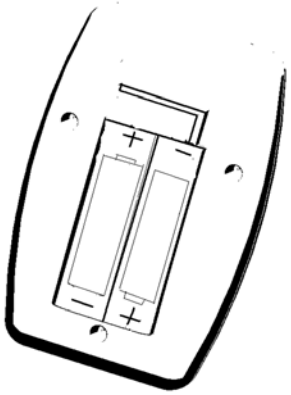

4. Install the battery cover back to the remote.

Note: i, Batteries do not include. ii, Remove batteries before storing remote control.

How to test frequency range:

- Switch the unit on.
- Use the remote control to switch the light on and off when you move away from the unit.
- When the light cannot be switched on and off by remote control, it is out of frequency range.

IMPORTANT INFORMATION

- Do NOT expose the remote control under sunlight for prolonged period of time.
- Remote control has frequency range up to 100ft (30m).
- Test frequency range before and during use.

TROUBLESHOOTING

If the remote cannot work properly or interface correctly with control panel, the cause may be weak batteries, batteries installed incorrectly or remote is not linked correctly with control panel.

Possible solutions

Replace batteries and install with right polarities referring to the diagram engraved in the battery apartment.

Link remote and control panel by:

1. Switch on both of control panel & remote,
2. Press and hold TEMP button on control panel for 3 seconds.
3. For remote, press the button in the sequence: MEAT PROBE, LIGHT, MEAT PROBE, LIGHT (pressing interval between each button must be within 5 seconds). You can hear a short beep sound after you press the button.

CAUTION

1. Keep batteries away from children. If battery is swallowed, consult a physician immediately.
2. Be sure to insert batteries correctly. Improper installation may result in leaks and/or possible explosion.
3. Do not dispose of batteries in fire.
4. Do not mix old and new batteries.
5. Do not mix alkaline, standard (carbon-zinc), or rechargeable (ni-cad, ni-mh,etc) batteries.

IMPORTANT NOTES FOR USING THE APPLIANCE

- Temperature setting is limited at 275°F (135°C) maximum.
- Wood chip tray MUST be located properly during operation. This can reduce and prevent wood chip flare-ups.
- Appropriate wood chips must be selected in order to produce smoke and create the smoke flavor.
- Clean up and empty the wood chip tray prior to smoke every time. Do not leave any old wood ashes in the wood chip tray. Once the ashes are cold, empty the tray.
- Clean up and empty the drip trip before smoking.
- Do not open the door unless necessary. Opening the door can cause heat loss and may cause wood chip to flare up. Closing the door can stabilize the inner temperature and stop to flare up.
- Opening the door during smoking can extend cooking time due to heat loss.
- If outside temperature is lower than 65°F (18°C) and/or altitude is higher than 3,500 feet (1067m), additional cooking time may be needed. Use a meat thermometer or meat probe to measure the internal temperature to ensure the meat is completely cooked.
- Tempered glass is used for door and will not break under normal operation.
- Do NOT move unit across uneven surfaces.
- Rear handle is NOT used for lifting.
- There will be plenty of smoke produced when using wood chips. Excess smoke will leak from the door seams and make the inner side black. It is normal. To minimize the smoke loss from the door, you can adjust the door latch in order to tighten the door seams against body surface.
- To adjust door/drawer latch, loose the hexagonal nut on door/drawer latch then turn the hook clockwise to tighten. Secure hexagonal nut firmly against door/drawer latch.

CLEANING GUIDES

WARNING

Make sure that unit is unplugged and cool down completely before cleaning and storing.

- Cleaning the unit before use is recommended.
- Clean the smoking grates, smoking grate with sausage hooks water tray and drip tray with a moist sponge or rag using mild detergent. Rinse and dry thoroughly.
- Cleans the wood chip tray frequently to remove ash build-up, residue and dust.
- Clean the interior, glass in door, light cover, meat probe and exterior of smoker by wiping down simply with a damp cloth. Do not use cleaning agent. Ensure to dry thoroughly.
- Door seal and inside seam that seal attaches to MUST be cleaned after each use to keep seal in proper working condition.
- Do not submerge or run water over control panel or cord. Doing so may cause electrocution.

PROCEDURE FOR REPLACEMENT OF HEATING ELEMENT

WARNING

- Make sure that unit is unplugged and cool down completely before replacement of heating element.
- Make sure that the protective cover has been installed back to the unit after replacement.
- Replacement of heat element should be operated by a qualified service technician.

1. Unplug the unit before replacement of heating element.
2. Remove 6pcs M4 screws at the protective cover and then take the protective cover out from the back panel.

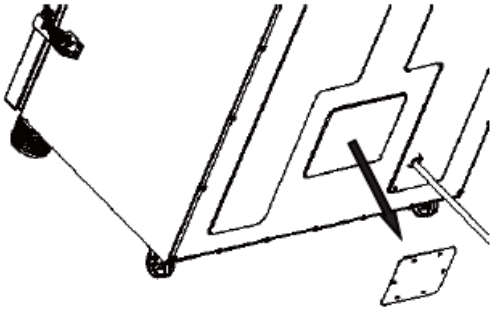

3. Disconnect two wire connectors (red and white) of heating element and remove M4 bolt and nut for the ground wire connector (yellow green) as shown below.

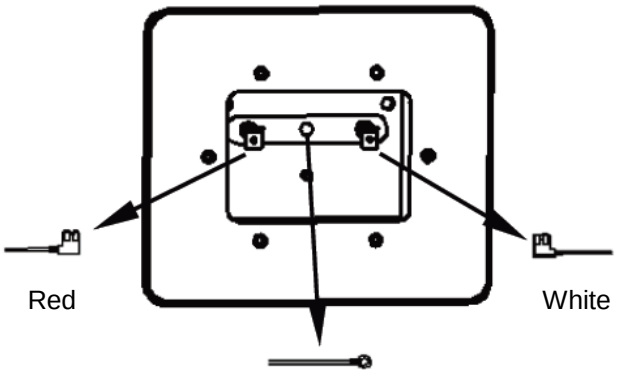

4. Remove M5 bolts and nuts at heating element and take the element out from the unit.

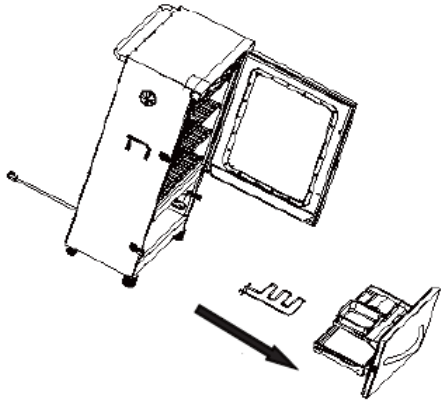

5. Replace a new heating element back to the unit. Reinstall it by using M5 bolts and nuts from step 4.

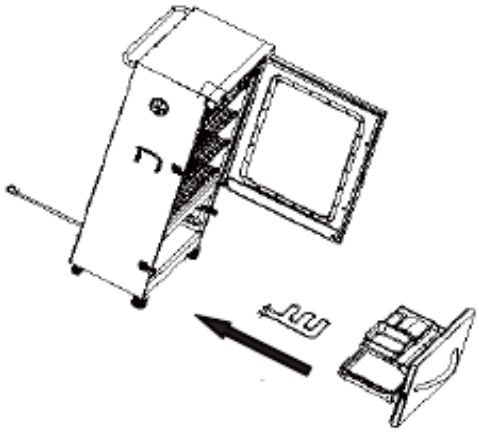

6. Connect two wire connectors (red and white) to the terminals of the new heating element and then install the ground wire (yellow and green) by using M4 bolt and nut from step 3 as shown below.

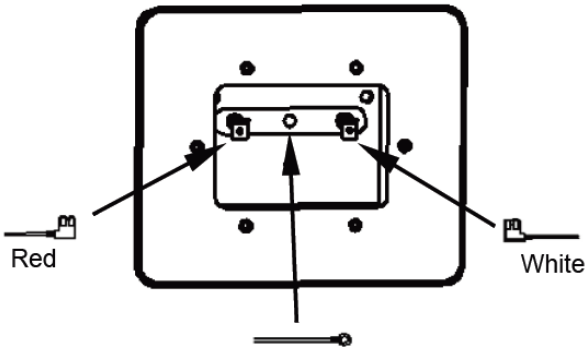

7. Install the protective cover to the back panel by using 6 pcs M4 screws from step 2.

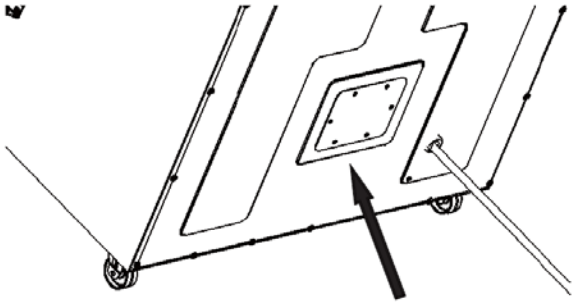

This device complies with Part 15 of the FCC Rules. Operation is subject to the following two conditions:
(1) this device may not cause harmful interference, and
(2) this device must accept any interference received, including interference that may cause undesired operation.

FCC Warning

Warning: Changes or modifications to this unit not expressly approved by the party responsible for compliance could void the user's authority to operate the equipment.

FCC Statement

NOTE: This equipment has been tested and found to comply with the limits for a Class B digital device, pursuant to Part 15 of the FCC Rules. These limits are designed to provide reasonable protection against harmful interference in a residential installation. This equipment generates uses and can radiate radio frequency energy and, if not installed and used in accordance with the instructions, may cause harmful interference to radio communications.

However, there is no guarantee that interference will not occur in a particular installation. If this equipment does cause harmful interference to radio or television reception, which can be determined by turning the equipment off and on, the user is encouraged to try to correct the interference by one or more of the following measures:

1. Reorient or relocate the receiving antenna.
2. Increase the separation between the equipment and receiver.
3. Connect the equipment into an outlet on a circuit different from that to which the receiver is connected.
4. Consult the dealer or an experienced radio/TV technician for help.

TROUBLE SHOOTING

Problem	Reason	Possible Solution
Power light malfunction.	Poor connection between plug and socket.	Check the socket connection or reconnect the plug into the socket again.
	Control panel malfunction.	Refer to user manual P.15 “How to RESET control panel” to reset the control panel. If the unit still cannot work, please contact customer service at (888) 837-1380.
	House fuse is activated.	Check if any other appliances are not operating on the same socket connection then check household fuses.
Power light is on but the heating element is not operated.	Have not pressed “ON/OFF” button.	Press “ON/OFF” button.
	Reach the preset temperature.	Wait for the unit to cool down below the preset temperature or set for a higher temperature.
	Heating element failure.	Contact customer service at (888) 837-1380.
Prolong heat up time (longer than 60-70 minutes)	Plug in the unit into an extension electrical cord.	Unplug the unit and do not use the extension electrical cord.
	Door and/or drawer are not closed properly.	Check and close the door and/or drawer then fasten the latches securely.
	Outside temperature is lower than 65°F (18°C) and/or altitude is higher than 3,500 feet (1067m).	Move the unit to a higher outside temperature and/or move the unit to the location near sea level.
	Control panel malfunction.	Refer to user manual P.15 “How to RESET control panel” to reset the control panel. If the unit still cannot work, please contact customer service at (888) 837-1380.
No smoke comes out.	No wood chips or wood chips have been used up.	Load wood chips.

Grease is leaking out of from the unit through door and drawer.	Drip tray is not located in place.	Locate the drip tray into drawer at right position.
	Drip trip is full.	Clean and empty the drip tray.
	Excess grease or oil build-up in unit.	Clean the unit.
Gaps between door, drawer and smoker during use and the latches do not have any more adjustment.	Bad alignment of door and/or drawer.	Contact customer service at (888) 837-1380.
	Sealing of door and/or drawer are damaged.	
Temperature decreased rapidly or shut down abnormally after operation in few hours.	Internal wiring issue.	Refer to user manual P.15 “How to RESET control panel” to reset the control panel. If the unit still cannot work, please contact customer service at (888) 837-1380.
	Control panel malfunction.	
LED of control panel shows error message or no message.	Temperature sensor and/or meat probe malfunction.	Refer to user manual P.15 “How to RESET control panel” to reset the control panel. If the unit still cannot work, please contact customer service at (888) 837-1380.
	Control panel malfunction.	
Cannot adjust the temperature setting and/or time setting in control panel.	Control panel malfunction.	Refer to user manual P.15 “How to RESET control panel” to reset the control panel. If the unit still cannot work, please contact customer service at (888) 837-1380.
Bulb does not light.	Bulb burned out.	Replace a new bulb with 15W-25W which used for ovens.
	“Light” button is not pressed.	Press “Light” button.
Remote control does not work properly.	Batteries are weak or installed in wrong polarities.	Refer to user manual P.15-16 "How to replace batteries for remote control" to install the new batteries in right polarities.
	Remote control is not linked properly with control panel.	Refer to user manual P.16 "Possible solutions" to link remote and control panel again.
	Remote control malfunction.	Contact customer service at (888) 837-1380.
If any symptom is not listed, please contact our customer service at (888) 837-1380.		

LIMITED WARRANTY

1. Manufacturer warrants this Product to be free from defects in workmanship and materials for a period of Ninety (90) days from the date of purchase, PROVIDED claims are submitted, in writing, with proof of purchase.
2. If any part of this item fails because of a manufacturing defect within the Limited Warranty Period, Manufacturer offers to replace such part(s) provide that such parts have not been improperly repaired, altered, or tampered with or subject to misuse, abuse or exposed to corrosive conditions. This Limited Warranty is, however, subject to certain limitations, exclusions, time limits and exceptions (Hereinafter "Conditions") as listed below. Read these Conditions carefully.
3. This Limited Warranty shall be limited to the replacement or repair of any part(s) which Manufacturer determines, after reasonable examination, to have been defective at the time of manufacturing and manufacturer's obligation(s) shall be limited to replacement, if any, of defective part(s) which shall be shipped at Original Purchaser's expense to Original Purchaser's designated shipping address.
4. This Limited Warranty is given to and covers the **ORIGINAL PURCHASER ONLY** and such coverage terminates Ninety (90) days from the date of purchase.
5. **DAMAGE LIMITATION WARNING:** IN NO EVENT SHALL MANUFACTURER BE LIABLE FOR ANY INCIDENTIAL OR CONSEQUENTIAL DAMAGES, INCLUDING (BUT NOT LIMITED TO) LOSS OF USE OF THE PRODUCT, LOSS OF TIME, LOSS OF FOOD, INCONVENIENCE, EXPENSES FOR TRAVEL, TRANSPORTATION LODGING EXPENSES, LOSS BY DAMAGE TO PERSONAL PROPERTY OR LOSS OF INCOME, PROFITS OR REVENUE.
6. **MANUFACTURER'S OBLIGATION:** Manufacturer's liability shall be limited to the delivery of a good, merchantable Product and, if necessary, the repair or replacement, at manufacturer's option, of any defective part or unit.
7. **TRANSFER LIMITATIONS:** This Limited Warranty is not assignable or transferable. It covers only the original purchaser.
8. **RESERVED RIGHT TO CHANGE:** Manufacturer reserves the right to make changes or improvements to products it produces in the future without imposing on itself any obligations to install the same improvements in the products it has previously manufactured.
9. This Limited Warranty gives the Original Purchaser specific legal rights but there may be other rights which vary by jurisdiction.
10. This warranty does not cover the following items:
    - Chips or scratches on porcelain or painted surfaces.
    - Rust or corrosion is not deemed a manufacturing or materials defect.
    - Discoloration or loss of paint due to handling during assembly, heat or cleaning products. Paint may require touch up.
    - Stainless steel discoloration or corrosion.
    - Consumables such as batteries.

IF CUSTOMER SERVICE BECOME NECESSARY:

1. The Original Purchaser is responsible for shipping and handling charges of the returned item(s) and replacement parts, if any.
2. All parts to be replaced will need to be shipped before replacement items will be sent.
3. Follow the Customer Service Representative's instructions exactly. If a return is necessary, it must be packed carefully and shipped prepaid.

Should you encounter any problem,
CALL US FIRST.
Do not return product to the store.
WE CAN HELP.

For assistance, contact customer service at **customerservice@rankam.com**
or at (888) 837-1380, Mon to Fri, 8:00am – 5:00pm Pacific Standard time

Manufacturer information

Rankam Metal Products Manufactory Ltd.

Address: 18/F,. New Lee Wah Centre, 88 Tokwawan Road, Kowloon, Hong Kong.