DoorBird
Technology meets Design.

Page 2-17

Installation Manual

IP Video Indoor Station

A1103 / A1104

VERSION 1.0, MIN. HW 1.0

INSTALLATION MANUAL

Read these instructions carefully before starting to use any components. Keep the manual so you can refer to it at a later date if required. If you hand over the device to other persons for use, please hand over the operating manual as well.

You can always find the most up-to-date version of the installation manual on www.doorbird.com/support

To make things easier we use the term “device” for the product “DoorBird IP Video Indoor Station A1101” and “mobile device” for a smartphone or tablet.

Liability
Every care has been taken in the preparation of this document. Please inform Bird Home Automation GmbH of any inaccuracies or omissions. Bird Home Automation GmbH cannot be held responsible for any technical or typographical errors and reserves the right to make changes to the product and manuals without prior notice. Bird Home Automation GmbH makes no warranty of any kind with regard to the content of this document, including, but not limited to, the implied warranties of merchantability and fitness for a particular purpose. Bird Home Automation GmbH shall neither be liable nor responsible for incidental or consequential damages in connection with the furnishing, performance or use of this material. This product is only to be used for its intended purpose.

Equipment Modifications
This equipment must be installed and used in strict accordance with the instructions given in the user documentation. This equipment contains no components that require service by the user. Unauthorized equipment changes or modifications will invalidate all applicable regulatory certifications and approvals.

Symbols used

Danger: Indicates a hazardous situation which, if not avoided, will result in death or serious injury.

Warning: Indicates a hazardous situation which, if not avoided, could result in death or serious injury.

Caution: Indicates a hazardous situation which, if not avoided, could result in minor or moderate injury.

NOTICE **Notice:** Indicates a situation which, if not avoided, could result in damage to property.

Important: Indicates significant information which is essential for the product to function correctly.

Note: Indicates useful information which helps in getting the most out of the product.

IC Statement
This device contains licence-exempt transmitter(s)/receiver(s) that comply with Innovation, Science and Economic DevelopmentCanada’s licence-exempt RSS(s). Operation is subject to the following two conditions:
(1) This device may not cause interference.
(2) This device must accept any interference, including interference that may cause undesired operation of the device.
The term “IC: “ before the certification/registration number only signifies that the Industry Canada technical specifications were met.
This product meets the applicable Industry Canada technical specifications.
Cet appareil contient des émetteurs / récepteurs exemptés de licence conformes aux RSS (RSS) d’Innovation, Sciences etDéveloppement économique Canada. L’exploitation est autorisée aux deux conditions suivantes : (1) l’appareil ne doit pasproduire de brouillage,et (2) l’utilisateur de l’appareil doit accepter tout brouillage radioélectrique subi, même si le brouillage est susceptible d’en compromettre le fonctionnement.
L’émetteur/récepteur exempt de licence contenu dans le présent appareil est conforme auxCNR d’Innovation, Sciences et Développement économique Canada applicables aux appareils radio exempts de licence.
L’exploitation est autorisée aux deux conditions suivantes :
1)L’appareil ne doit pas produire de brouillage;
2)L’appareil doit accepter tout brouillage radioélectrique subi, même si le brouillage est susceptible d’en compromettre lefonctionnement.
This transmitter must not be co-located or operating in conjunction with any other antenna ortransmitter. This equipment should be installed and operated with a minimum distance of 20centimeters between the radiator and your body.
Cet émetteur ne doit pas être Co-placé ou ne fonctionnant en même temps qu’aucune autre antenne ouémetteur. Cet équipementdevrait être installé et actionné avec une distance minimum de 20 centimètres entre le radiateur et votre corps.

FCC Statement
Changes or modifications not expressly approved by the party responsible for compliance could void the user’s authority to operate the equipment.
This equipment has been tested and found to comply with the limits for a Class B digital device, pursuant to Part 15 of the FCC Rules. These limits are designed to provide reasonable protection against harmful interference in a residential installation. This equipment generates uses and can radiate radio frequency energy and, if not installed and used in accordance with the instructions, may cause harmful

interference to radio communications. However, there is no guarantee that interference will not occur in a particular installation. If this equipment does cause harmful interference to radio or television reception, which can be determined by turning the equipment off and on, the user is encouraged to try to correct the interference by one or more of the following measures:
-- Reorient or relocate the receiving antenna.
-- Increase the separation between the equipment and receiver.
-- Connect the equipment into an outlet on a circuit different from that to which the receiver is connected.
-- Consult the dealer or an experienced radio/TV technician for help
This device complies with part 15 of the FCC rules. Operation is subject to the following two conditions
(1)this device may not cause harmful interference, and
(2) this device must accept any interference received, including interference that may cause undesired operation.
This equipment complies with FCC radiation exposure limits set forth for an uncontrolled environment. This equipment should be installed and operated with minimum distance 20cm between the radiator & your body.

Please observe the warnings and safety instructions in our accompanying booklet:
https://www.doorbird.com/downloads/warnings.pdf

COMPONENTS

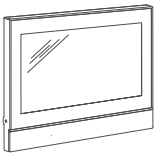

1x Device

1x Installation manual

1x Quickstart guide with Digital Passport

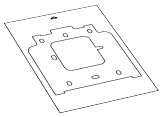

1x Drilling template

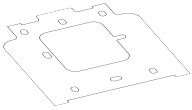

1x Mounting bracket

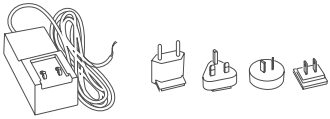

1x Power supply unit (mains adaptor) with up to four country-specific adaptors

1x LAN Kabel

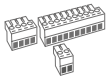

3x Screw connection terminal plugs

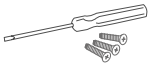

Small parts

DEVICE

A1103 front

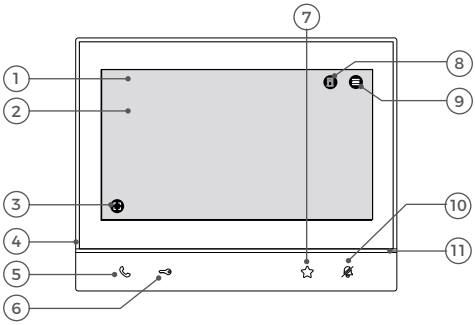

A1104 front

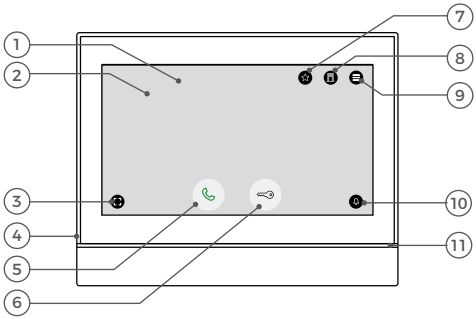

1) Gorilla® Glass
2) Touch Display
3) Button "Hide icons"
4) Microphone
5) Button "Enable listen and talk"
6) Button "Open door"
7) Button "Favourite"
8) Button "Device selection"
9) Button "Menu"
10) Button "Mute"

A1103 & A1104 back

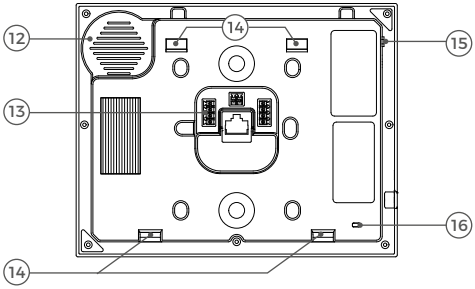

12) Speaker
Large-sized broadband speaker

13) Screw connection terminal

14) Mounting points
To mount the device on the mounting bracket

15) Setup button (SET)
of the device, to e.g. configure the WiFi interface of the device using the DoorBird App

16) Diagnostic-LEDs
To visualize the current status of the device

VIDEOS

Need help with the installation? Be sure to watch our installation videos which can be found on www.doorbird.com/support

Each individual step of the installation is clearly documented in the videos.

INSTALLATION

All the steps below should be carried out carefully by a competent adult, taking into consideration any applicable safety regulations. Please contact us directly or seek the advice of a competent specialist.

Please ensure that all wires used for the installation are undamaged along their entire length and approved for this type of use.

Network speed and network components
Please ensure that the upload speed of your Internet connection is at least 0.5 Mbps. The user experience is only as good as your network speed, network stability and quality of your network components, such as your Internet Router and WiFi access points or WiFi repeaters. Please also make sure that your network components are no older than two years, have been manufactured by a well-known manufacturer, and have the latest firmware installed.

Should these requirements not be fulfilled, it may occur, for example, that the performance of audio and video is poor or push notifications are delayed or do not arrive on your smartphone or tablet at all.

Requirements:
High-speed Internet (via landline): DSL, cable or optical fibre
Network: Ethernet, with DHCP

INSTALLATION EXAMPLES

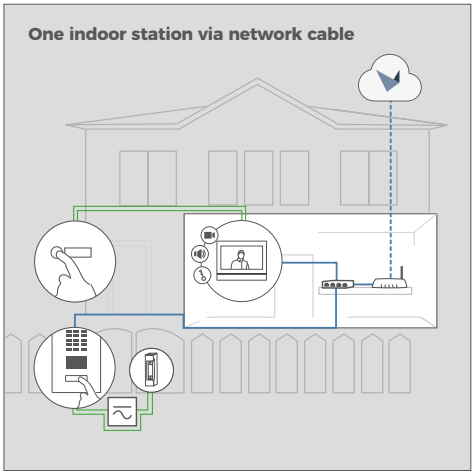

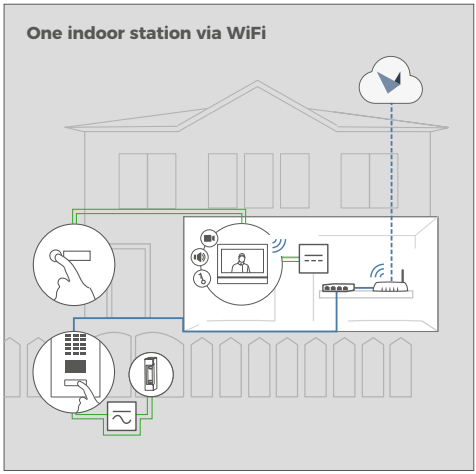

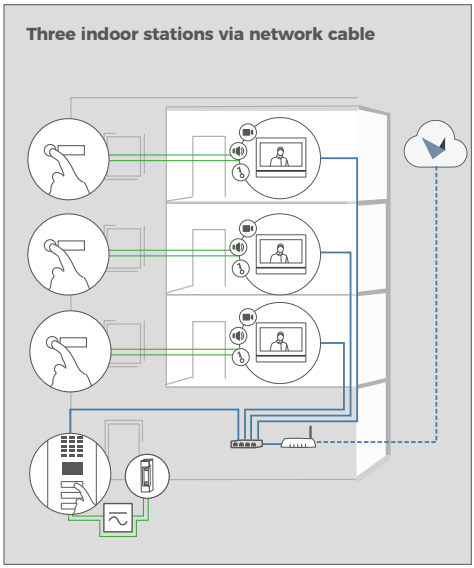

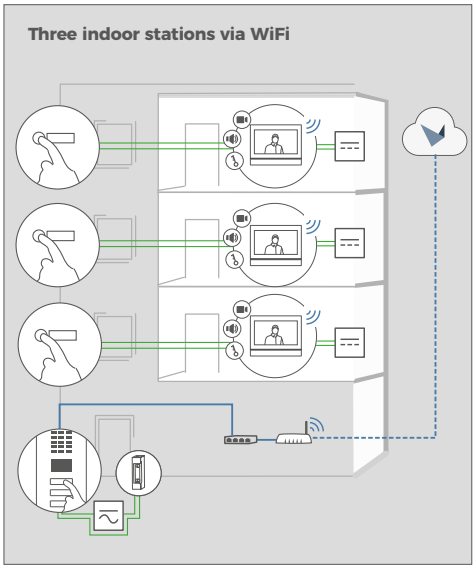

Storey-call button

Indoor Station

DoorBird IP Video Door Station

Electric door or gate opener. Can be secured via DoorBird I/O Door Controller if required (remote safety relay)

Power over Ethernet (PoE) Switch

Router with High-speed Internet, DHCP

Seperate power supply 15 V DC, 1 A

Seperate power supply 12 V DC, 1 A

Network cable

2-wire-cable

1 SWITCHING OFF POWER

Switch off the power to all wires leading to the assembly location, i.e. the door chime, electric door opener, power supply unit, PoE-Switch/ PoE-Injector etc.

2 DISMANTLING THE EXISTING INDOOR STATION

Should there already be an indoor station on the wall, please remove it.

3 DETERMINING THE ASSEMBLY LOCATION

The device is designed for indoor-use only.

Recommended installation height:
160 cm / 63 in

Recommended installation height for people with impairments / disabilities:
130 cm / 51 in

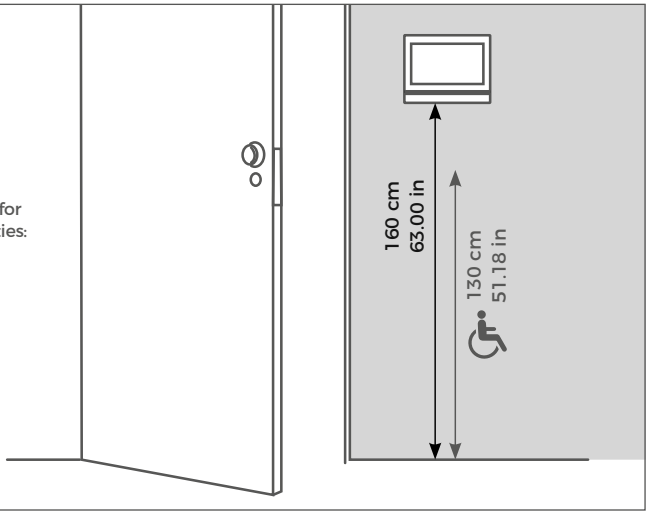

Flush mounting

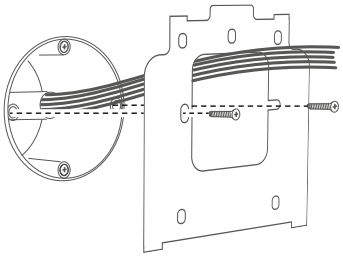

The mounting bracket may be used in connection with a standard 68 mm (2.68 in) hollow-wall box, which means you do not have to drill separate holes into the wall: You can use the existing screw holes of the hollow-wall box and skip STEP 4.

If you want to replace an existing A1101 indoor station, you can also use the existing drill holes.

If there is no hollow-wall box at the assembly location: Press the drilling template of the device against the wall or ceiling at the desired installation site and mark the drill holes with a pencil. Remove the drilling template again. Ensure that no cables are to be found in the wall or ceiling behind the boreholes.

Surface mounting with Wall Mounting Base (sold separately)

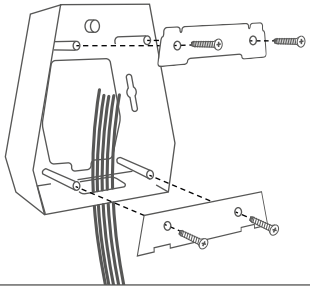

We offer additional a wall mounting base for installations where the cables run on the surface of the wall rather than inside the wall.

If you want to replace an existing A1101 indoor station, you can also use the existing drill holes.

If the wall of the house is not made of wood, you should drill dowel holes 5 mm in diameter in the wall according to the drilling template and then place the dowels provided into the boreholes.

If the wall of the house is made of wood, dowels are normally not required. There are special dowels for assembling the device on an insulating wall, e.g. Fischer insulating dowels.

Please check with your insulating material manufacturer regarding which dowels they recommend.

If you must drill holes in a wall, insert screws into a wall or lever up a wall, ensure that no cables or mains (gas, water, etc.) are to be found in the wall.

5 NETWORK CONNECTION OPTIONS

You can connect the device to the network by either using a network cable or a WiFi 2.4 GHz connection.

OPTION 1
Network cable (recommended, maintenance free)

Install a network cable (which is plugged into a network switch / router with Internet access) from the inside of your building to the assembly location. The network cable between the assembly location and the network switch / router can have a maximum length of 80 m/262 ft (IEEE 802.3). If you must span a distance of more than 80 meters/262 feet you can put a network switch inbetween. Make sure to use a high-quality Cat.5 network cable or better and with proper shielding (Screened Foiled Twisted Pair (S/FTP or SFTP)) whereby the shield is connected to the outer metal shield of the RJ45 plug (8P8C).

OPTION 2
WIFI 2.4 GHz

When using WiFi please make sure you have a good WiFi signal at the assembly location of the device. You can increase the WiFi signal by using so called "WiFi repeaters", which can boost your WiFi signal. You should install such a WiFi repeater close to the assembly location of the device, typically inside your home and close to the device.

If you have only two wires available at the assembly location, you may use the "DoorBird 2-Wire Ethernet PoE+ Converter A1072", sold separately. It allows you to transfer network data (Ethernet) and power (PoE) with a simple two-wire cable over long distances. For example, existing buildings with a simple two-wire bell wire can be equipped with network technology without having to retrofit any network cables.

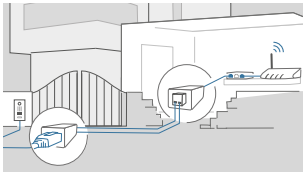

For reasons of network stability, we principally recommend using a network cable, as WiFi is sensitive to interference (range, house walls acting as shields, reliability of performance, third party WiFi networks, wireless transmitters causing interference in the area, etc.).

6 PREPARE POWER SUPPLY

The device does not have a battery as power supply, therefore, choose one of the following options.

OPTION 1

Power supply using the power supply unit (mains adaptor)

To power the device using the provided mains adapter, 2 insulated wires are required. The power supply unit has a 300 cm (9.8 ft) long cable with two insulated wires. The network connection is then established via a network cable or alternatively via WiFi.

NOTICE Do not plug the power supply unit into the wall socket yet.

Only use the power supply unit (see "OPTION 3") provided along with the device, or a DIN-rail power supply unit that you can obtain from us separately, since this has been specially stabilized electrically and is equipped with an integrated audio interference reduction device. Other power supply units may destroy the device or cause poor transmission quality. The warranty automatically expires if you use a different power supply unit.

The power supply unit is plugged into a wall socket inside your house (Step 10), usually where the two wires from your assembly location come out of the wall in the interior of the house.

The provided mains adaptor is only capable to power one device. It is not designed to power multiple devices simultanously.

If you must power more than one device with one power supply, we recommend to use a PoE-Switch with PoE Standard IEEE 802.3af Mode A or an appropriate DIN rail power supply (see "OPTION 3").

The provided mains adapter is not outdoor-ready, it is for indoor-use only.

OPTION 2

Power supply and network connection using PoE (Power over Ethernet)

To power the device via a PoE-Switch (e.g. D-Link DGS-1008P) or PoE-Injector (e.g. DoorBird Gigabit PoE Injector A1091), use a CAT.5 cable or higher in accordance with the PoE standard IEEE 802.3af Mode A.

A CAT.5 cable or higher must be used for this purpose, as network signals can only be transmitted over completely insulated, shielded and twisted cables. If you use PoE as a source of power, the four wires for PoE then simultaneously form the data line. The device will not start if your PoE-Switch/PoE-Injector does not support the PoE Standard IEEE 802.3af Mode A. Please check www.doorbird.com/poe for known incompatibilities.

NOTICE Do not combine the power supply from the power supply unit (mains adaptor) with the power supply via PoE.

You can find further information about PoE here: www.doorbird.com/poe

1. Disconnect the PoE-Switch or PoE-Injector from the power grid.
2. Place the network cable in the installation site of the device.

If you must power more than one device with one power supply, we recommend to use a PoE-Switch with PoE Standard IEEE 802.3af Mode A or an appropriate DIN rail power supply (see "OPTION 3").

OPTION 3
Power supply using a DIN rail power supply unit

Alternatively to the mains adapter, we offer DIN rail power supplies in our online shop, which can be installed by a specialist. The network connection is then made via a network cable or alternatively via WiFi.

Planning information to power multiple devices with a single DIN rail power supply unit

You must plan the cabling for the DIN rail power supply of the devices carefully, if you want to install more than one device in your building with a single DIN rail power supply unit.

The device has a power consumption of 5 Watt and an input voltage range from 15 to 48 VDC.

Each cable / wire has a specific load limit and loop resistance and power loss for physical reasons. The planning of the cabling, maximum number of devices and power supply depends on this. The following information will help you to plan the power supply installation in the building.

Please calculate the maximum number of devices and the power supply carefully, matching to the wire diameter and cable length. Wrong calculation and installation can lead to overheating, damage, electrical short and fire.

If shielded cables are used, the shielding should be connected to each other.

Often more than two wires are available on-site for the connection of an indoor station. The maximum current can be doubled to increase the maximum number of installable devices by using two wires for one core. In this case, the two wires must be twisted at both ends. The applied voltage must not exceed 48 VDC.

Theoretically (not recommended by us!), an unshielded, but over the whole length (max. 80 m/262 ft) twisted bell wire with two pairs of wires (first twisted pair of wires: "T+, T-", second twisted pair of wires "R+, R-") can be used for the network and PoE transmission as an alternative to a Cat.5 network cable or better. This is comparable to a Cat.3 network cable. In this case, however, we cannot guarantee the data throughput or the stability of the network connection and power supply; this must be measured and checked on site by qualified personnel over several hours (network data is transmitted at high frequency, therefore a shielded Cat.5 network cable twisted in pairs or better must normally be used).

If you must power more than one device with one power supply, we recommend to use a PoE-Switch with PoE Standard IEEE 802.3af Mode A or an appropriate DIN rail power supply.

The wire diameter is the inner metal core only, not the inner metal core plus the jacket.

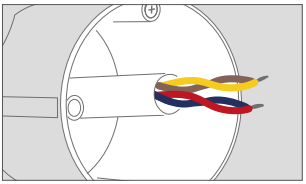

INFORMATION FOR PLANNERS OF **NEW BUILDINGS**

If you know how many devices must be installed and you know the length of the cables, you can check the following chart to see which wire diameter is required.

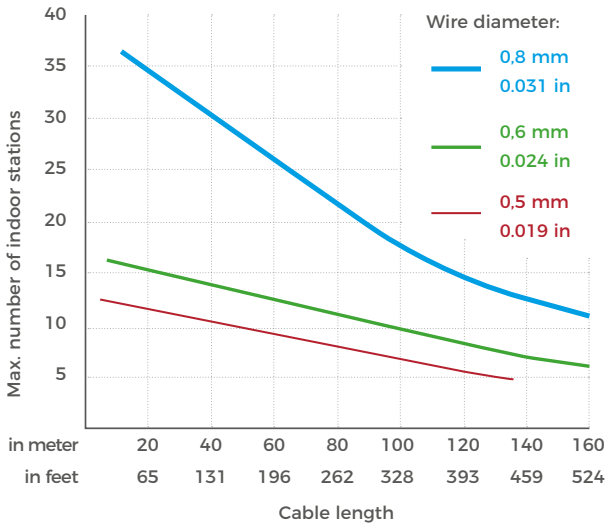

The following scenario is calculated and visualized in a chart under the worst-case scenario that all devices are connected to the rearmost end of cable in the building. In practice, the devices are distributed more or less evenly over the cable length / floors.

INFORMATION FOR PLANNERS OF **EXISTING BUILDINGS**

The length of the cables in existing buildings is often unknown and can only be roughly estimated. The diameter of the wires and the loop resistance (ohm) are known or at least easy measurable. This makes it possible to determine the maximum number of devices that can be connected to a single wire pair.

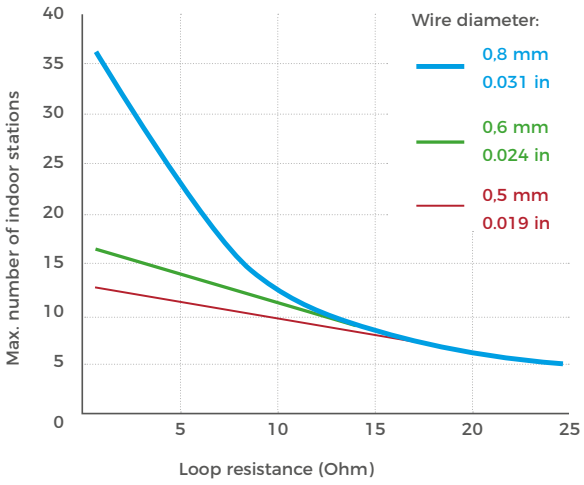

The following scenario is calculated and visualized in a chart under the worst-case scenario that all devices are connected to the rearmost end of cable in the building. In practice, the devices are distributed more or less evenly over the cable length / floors.

The loop resistance can easily be measured by switching off the power supply on the wires to be measured and applying a short-circuit to the lines to be measured on one side and measuring the resistance on the other side of the wires with a multimeter.

7 ASSEMBLE THE MOUNTING BRACKET (ONLY FOR FLUSH MOUNTING)

Lead all cables and wires you want to connect to the device through the mounting bracket. Screw the mounting bracket to the wall.

If you want to replace an existing A1101 indoor station, you can also use the existing drill holes.

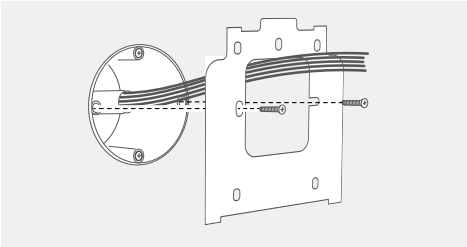

8 CONNECTING THE DEVICE

It is possible to connect the cables and wires to the device conveniently and safely via the labelled screw connection terminal. You can connect all necessary cables and wires to the device now.

NOTICE Please remove any cables and wires from the connection ports of the device that you do not need.

For easier installation we strongly recommend to remove the plug from screw connection terminal while you connect the cables and wires.

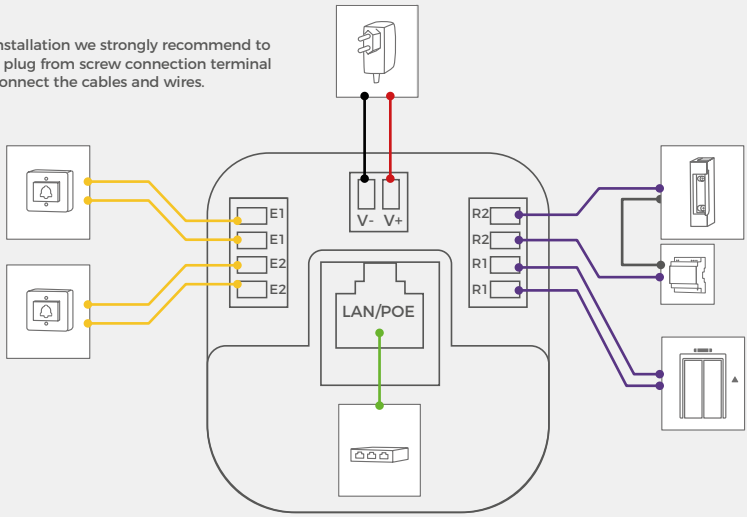

PORT		DESCRIPTION
LAN/POE	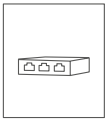	RJ45 jack to connect the Network coming from the Internet Router/PoE-Switch/PoE-Injector. **NOTICE** Do not power the device simultaneously via the power supply from the power supply unit (mains adaptor) and the power supply via PoE.
E1, E1, E2, E2 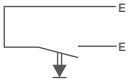	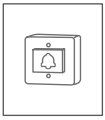	Digital input, max. 0 VDC / VAC, 0 A, e.g. for storey-call button **NOTICE** Please make sure to add no voltage on these ports. Extra voltage may destroy the device immediately.
R1 R1, R2 R2 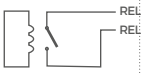	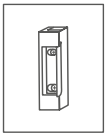	Bistable latching relay #1 and relay #2, max. 24 VDC / VAC, 1 A. Security feature: The relay keeps its state even in the case of loss of power. You can configure the default state of the relay (open/close) via the DoorBird App. These ports can be used to connect e.g. an electric door opener or to call an elevator. The device does not supply power to the connected device. The power supply for the electric door opener must be installed separately.
15 VDC -	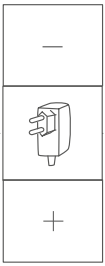	15 to 48 V DC Power supply input, negative pole (-). Please connect the black wire of the power supply unit (mains adaptor) supplied with this device if you do not power the device using PoE. **NOTICE** Do not power the device simultaneously via the power supply from the power supply unit (mains adaptor) and the power supply via PoE.
15 VDC +		15 to 48 V DC Power supply input, positive pole (+). Please connect the red wire of the power supply unit (mains adaptor) supplied with the device here, if you do not power the device using PoE. **NOTICE** Do not power the device simultaneously via the power supply from the power supply unit (mains adaptor) and the power supply via PoE.

NOTICE Please take care when connecting the cables and wires. Connecting the cables and wires the wrong way may damage the device. Wires without insulation material must not protrude out of the screw connection terminal plugs, it may lead to electrical short and damage the device.

9 ASSEMBLE THE DEVICE TO THE MOUNTING BRACKET

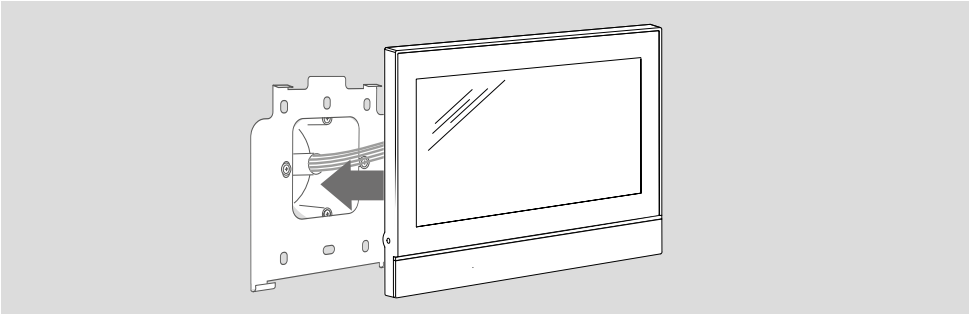

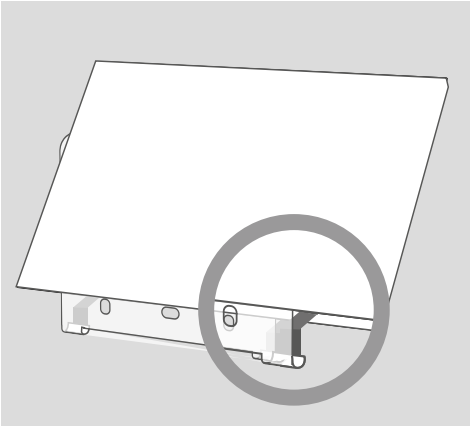

Hook the device into the lower part of the mounting bracket.

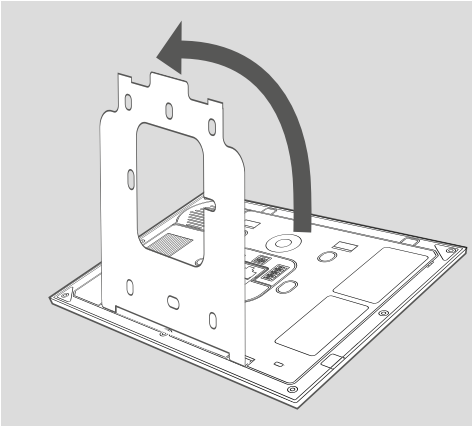

Fold the device upward until it snaps magnetically into place on the mounting bracket.

10 ACTIVATE THE DEVICE

If the device is to be supplied with power by a mains adapter, plug the power adapter of the device into a wall socket. If the device is to be powered via PoE, switch on the PoE-Switch/ PoE-Injector which is connected to the device. If the device is to be powered via DIN-rail power supply, switch on the DIN-rail power supply.

The Diagnostic-LEDs indicate whether the device is supplied with power. These LEDs light up in blue color immediately after you have connected the device to the power supply. The device is now ready for operation.

If the Diagnostic LED does not light up, please check the power supply. When using a wall-plug power supply and not PoE please check whether you have connected the positive pole and negative pole to the device correctly.

Please note that the Diagnostic-LEDs are different to the Status Bar LEDs. The LEDs used for the LED Status Bar can illuminate the Status Bar all-over and in almost any color.

The device is ready for operation (booting up process, any software updates, etc.) once it has emitted a short diagnosis sound from the integrated loudspeaker. This may last for up to 5 minutes. Should you not hear a sound, please check the power supply. When using a wall-plug power supply and not PoE please check whether you have connected the positive pole and negative pole to the device correctly.

11 DOWNLOADING AND INSTALLING THE APP

Download the "DoorBird" App by Bird Home Automation onto your mobile device from the Apple App Store or Google Play Store. You can always find the most up-to-date version of the App manual on www.doorbird.com/support

If you use WiFi for connecting the device to your Internet Router, first go to the DoorBird App "⚙ > WiFi Setup" and follow the instructions.

If you have finished the WiFi setup or have connected the device to your Internet Router by means of a network cable, go to the DoorBird App "⚙ > Administration" and log in to the Administration area of the DoorBird Video Door Station (using the authentication details of the desired Video Door Station!) you would like to pair the device with (using the authentication details of the desired Video Door Station!). To pair the device there, go to "Peripherals > ⚙ > Add".

If you have problems adding the device to the App please check if the device is online (www.doorbird.com/checkonline). If the device is not online, please check the WiFi or network cable connection again.
The device is designed to be installed in single-family homes, offices and multi-unit residential dwellings. Ring volume, ring tone etc. can be configured using the touch screen of the device by the end-user. All other configuration options like weather station, user credentials, parental mode (PIN settings) etc. are available for security reasons protected with administrator credentials through the DoorBird App, to avoid that residents misconfigure the device accidentially or intentionally.

DIAGNOSTIC LEDS

You can see if the device is powered by checking the Diagnostic LEDs, which lights up a immediately after the power is connected.

DIAGNOSTIC SOUNDS

After around one minute, the device emits brief diagnostic sounds after it has been connected to power supply / network / internet.

TROUBLESHOOTING

The device does not power up
If the device is to be supplied with power by a mains adapter, plug the power adapter of the device into a wall socket. If the power adapter was already plugged into a wall socket, check if the cables and wires are correctly connected to the screw connection terminal. In most cases, removing the cable and wires from the screw connection terminal plug and reconnecting them to the screw connection terminal plug helps (loose contact). If you are powering more than one device simultanously with one mains adapter, check if the mains adapter is able to deliver enough power over the full cable length.

If the device is to be powered via PoE, switch on the PoE-Switch/ PoE-Injector which is connected to the device. If the PoE-Switch/ PoE-Injector was already switched on, check if the cables and wires are correctly connected screw connection terminal. In most cases, removing the cable and wires from the screw connection terminal plug and reconnecting them to the screw connection terminal plug helps (loose contact). If the problem still exists, please check if your PoE-Switch / PoE Injector supports the PoE Standard IEEE 802.3af Mode A, see also www.doorbird.com/poe

If the device is to be supplied with power by a DIN-rail power supply, switch on the DIN-rail power supply If the DIN-rail power supply was already switched on, check if the cables and wires are correctly connected to the screw connection terminal. In most cases, removing the cable and wires from the screw connection terminal plug and reconnecting them to the screw connection terminal plug helps (loose contact). If you are powering more than one device simultanously with one DIN-rail power supply, check if the DIN-rail power supply is able to deliver enough power over the full cable length.

The device does not connect to network via WiFi ("No Network" diagnosis sound)

In most cases, your WiFi signal is weak. Please perform the WiFi Setup again using the DoorBird App.

You can increase the WiFi signal by using so called "WiFi repeaters", which can boost your WiFi signal. You should install such a WiFi repeater close to the assembly location of the device, typically inside your home and close to the device.

If the problem still exists, please check if your WiFi Router / WiFi Access Point does not block device, e.g. through a MAC address filter.

If the problem still exists, please check if your WiFi Router / WiFi Access Point has DHCP turned on and is able to assign an IP address to the device.

The device does not connect to network via network cable ("No Network" diagnosis sound)

In most cases, removing the cable and wires from the screw connection terminal plug and reconnecting them to the screw connection terminal plug helps (loose contact).
If the problem still exists, please check if the network cable is properly connected to your router / switch and the network cable is not broken.

If the problem still exists, please check if your Router has DHCP turned on and is able to assign an IP address to the device.

The device does not connect to Internet ("No Internet" diagnosis sound)

In most cases, your Internet is down or your router blocks Internet access for the device. Please see www.doorbird.com/downloads/ports.pdf

LEGAL NOTES

General remarks

1. DoorBird is a registered trademark of Bird Home Automation GmbH.
2. Apple, the Apple logo, Mac, Mac OS, Macintosh, iPad, Multi-Touch, iOS, iPhone and iPod touch are trademarks of Apple Inc.
3. Google, Android and Google Play are trademarks of Google, Inc.
4. The Bluetooth® word mark and logos are registered trademarks of Bluetooth SIG, Inc.
5. QR Code is a registered trademark of Denso Wave Incorporated in Japan and other countries.
6. All other company and product names may be trademarks of the respective companies with which they are associated.
7. We reserve the right to make changes to our products in the interests of technical advancement. The products shown may also look different from the products supplied based on ongoing enhancement.
8. Reproducing or using texts, illustrations and photos from this instruction manual in any media – even if only in the form of excerpts – shall only be permitted with our express written consent.
9. The design of this manual is subject to copyright protection. We do not accept any liability for any errors or any erroneous content or printing errors (even in the case of technical specifications or within graphics and technical sketches).
10. Our products are in compliance with all technical guidelines, electrical and telecommunications regulations applicable in Germany, the EU and the USA.
11. Our products and also the components contained therein (ICs, software, etc.) may only be used for civilian non-military purposes.

Data privacy and data security

1. For maximum security, the device uses the same encryption technologies as are used in online banking. For your security, no port forwarding or DynDNS is used either.
2. The data centre location for remote access over the Internet by means of an App is obligatory in the EU if the determined Internet IP-Address location of the device is within the EU. The data centre is operated in line with the most stringent security standards.
3. Video, audio and any other surveillance methods can be regulated by laws that vary from country to country. Check the laws in your local region before installing and using this device for surveillance purposes.

If the device is a door-, indoor station or camera:

- In many countries video and voice signal may only be transmitted once a visitor has rung the bell (data privacy, configurable in the App).
- Please carry out the mounting in such a way that the detection range of the camera limits the device exclusively to the immediate entrance area.
- The device may come with a visitor history and motion sensor. You can activate/deactivate this function if required.

If necessary, indicate the presence of the device in a suitable place and in a suitable form.

Please observe any relevant country-specific statutory regulations concerning the use of surveillance components and surveillance cameras applicable at the installation site.

Check with the property owner and your house community if you are allowed to install and use this product. Bird Home Automation GmbH cannot be held responsible for any miss-use or miss-configuration of this product, including the unauthorized opening of a door.

Bird Home Automation cannot be held responsible for damages caused by improper existing installations or improper installation.

Software and operating system's updates (so-called "firmware updates") are generally automatically installed on the products of Bird Home Automation GmbH via Internet, if technically possible. Automatic firmware updates keep the products' software up to date so that they always work reliably, safely and efficiently. Through further development, features can be added, extended or slightly changed. Major changes or limitations to existing features will generally occur if Bird Home Automation GmbH deems it necessary (e.g. for data protection, data security or stability reasons, or to keep them up to date). When a firmware update is available, Bird Home Automation GmbH's servers generally automatically distribute it to all compatible products connected to the Internet or Bird Home Automation GmbH's servers. This process is gradual and can take several weeks. As soon as a product receives a firmware update, the system will be installed and will restart by itself. Installed firmware updates cannot be undone. Since the products and software of Bird Home Automation GmbH are not explicitly customer-specific products, a customer cannot deny an automatic update if the product is connected to the Internet or to the Bird Home Automation GmbH's server.

Publisher
Bird Home Automation GmbH
Uhlandstraße 165
10719 Berlin
Germany

Web: www.doorbird.com
Email: hello@doorbird.com

It is possible that these manual still contains typographical errors or printing errors.The information in this manual will be checked regularly and corrections will be made in the next version. We accept no liability for errors of a technical or printing nature and their consequences.
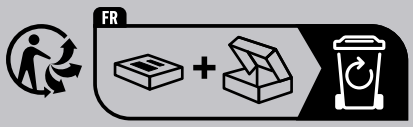
DoorBird
Technology meets Design.