Test Laboratory: Sporton International Inc. SAR/HAC Testing Lab Date: 2019/6/1

System Check_Head_750MHz

DUT: D750V3-1107

Communication System: CW ; Frequency: 750 MHz;Duty Cycle: 1:1
Medium: HSL_750_190601 Medium parameters used: f = 750 MHz; σ = 0.903 S/m; ε_r = 43.07; ρ = 1000 kg/m^3
Ambient Temperature：23.7 ℃; Liquid Temperature：22.7 ℃

DASY5 Configuration
- Probe: EX3DV4 - SN7306;ConvF(10.19, 10.19, 10.19) @ 750 MHz;Calibrated: 2018/7/26
- Sensor-Surface: 1.4mm (Mechanical Surface Detection)
- Electronics: DAE4 Sn699; Calibrated: 2019/1/3
- Phantom: Twin-SAM V5.0 (30deg probe tilt); Type: QD 000 P40 CD; Serial: 1885
- Measurement SW: DASY52, Version 52.10 (2); SEMCAD X Version 14.6.12 (7450)

Pin=250mW/Area Scan (61x61x1): Interpolated grid: dx=1.500 mm, dy=1.500 mm
Maximum value of SAR (interpolated) = 2.87 W/kg

Pin=250mW/Zoom Scan (5x5x7)/Cube 0: Measurement grid: dx=8mm, dy=8mm, dz=5mm
Reference Value = 57.96 V/m; Power Drift = 0.03 dB
Peak SAR (extrapolated) = 3.24 W/kg
SAR(1 g) = 2.19 W/kg; SAR(10 g) = 1.47 W/kg
Maximum value of SAR (measured) = 2.88 W/kg

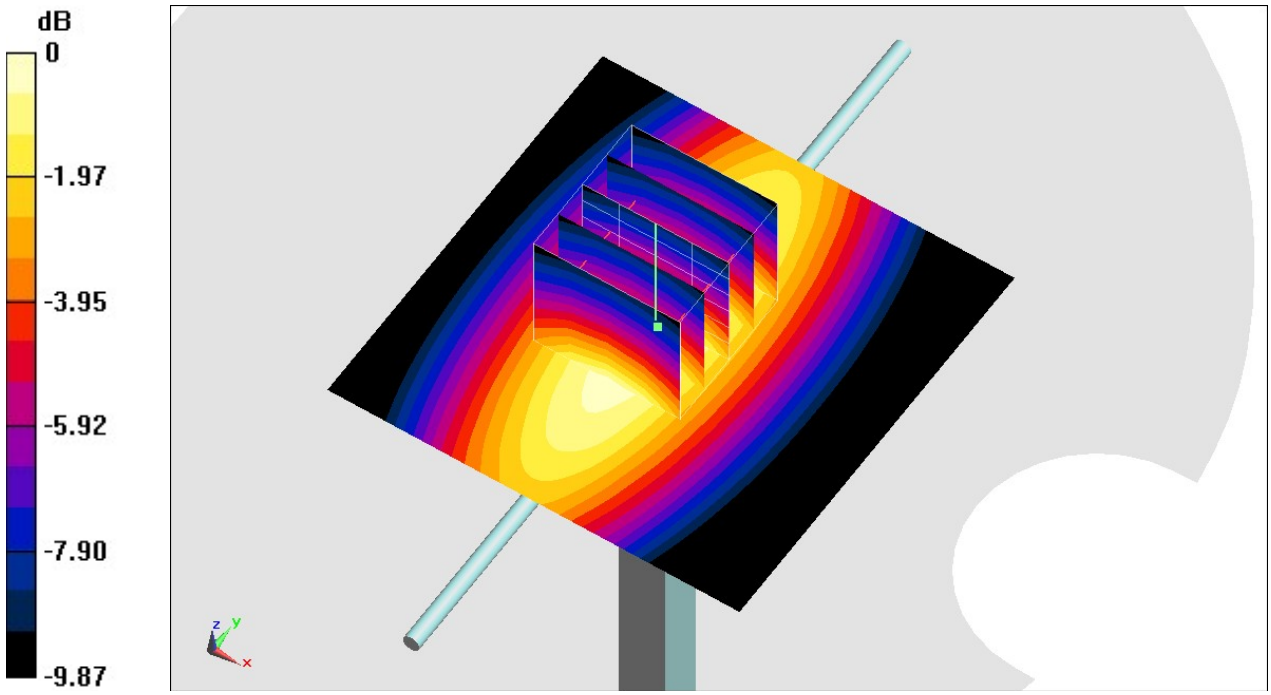

0 dB = 2.88 W/kg = 4.59 dBW/kg

System Check_Head_750MHz

DUT: D750V3-1012

Communication System: CW; Frequency: 750 MHz;Duty Cycle: 1:1
Medium: HSL_750_190616 Medium parameters used: f = 750 MHz; σ = 0.898 S/m; ε_r = 43.231; ρ = 1000 kg/m^3
Ambient Temperature：23.3 ℃; Liquid Temperature：22.3 ℃

DASY5 Configuration:
- Probe: ES3DV3 - SN3270; ConvF(6.56, 6.56, 6.56) @ 750 MHz; Calibrated: 2018/9/24
- Sensor-Surface: 3mm (Mechanical Surface Detection)
- Electronics: DAE3 Sn577; Calibrated: 2018/9/19
- Phantom: SAM_Right; Type: SAM; Serial: TP:1479
- Measurement SW: DASY52, Version 52.10 (2);SEMCAD X Version 14.6.12 (7470)

Pin=250mW/Area Scan (61x61x1): Interpolated grid: dx=1.500 mm, dy=1.500 mm
Maximum value of SAR (interpolated) = 2.34 W/kg

Pin=250mW/Zoom Scan (5x5x7)/Cube 0: Measurement grid: dx=8mm, dy=8mm, dz=5mm
Reference Value = 51.09 V/m; Power Drift = 0.03 dB
Peak SAR (extrapolated) = 2.83 W/kg
SAR(1 g) = 2.03 W/kg; SAR(10 g) = 1.39 W/kg
Maximum value of SAR (measured) = 2.34 W/kg

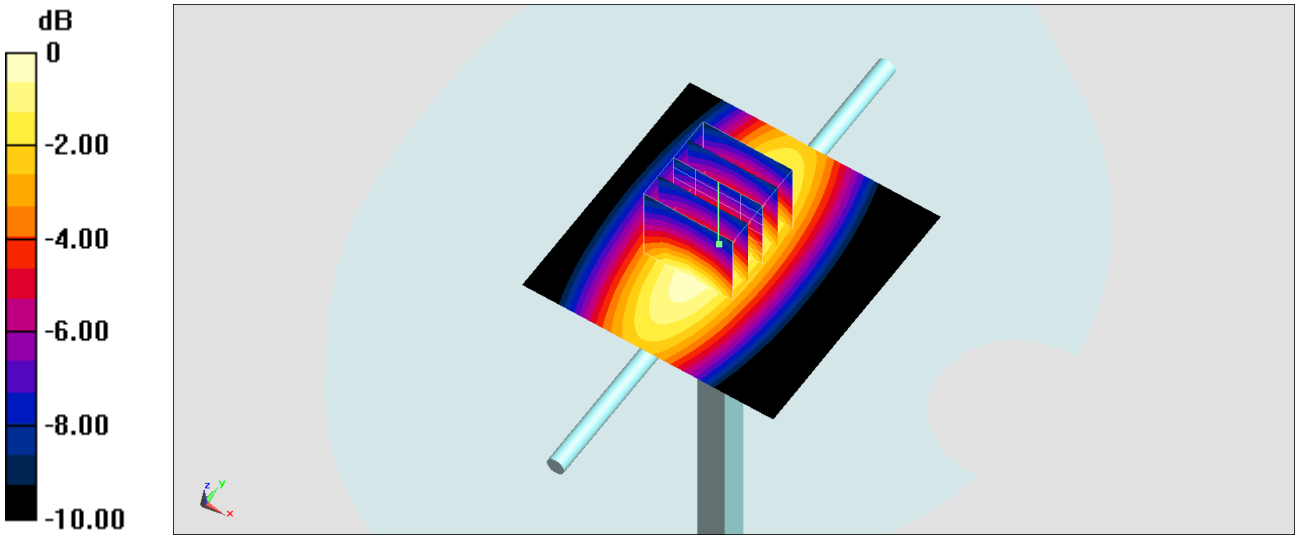

0 dB = 2.34 W/kg = 3.69 dBW/kg

Test Laboratory: Sporton International Inc. SAR/HAC Testing Lab Date: 2019/6/1

System Check_Head_835MHz

DUT: D835V2-499

Communication System: CW; Frequency: 835 MHz;Duty Cycle: 1:1
Medium: HSL_850_190601 Medium parameters used: f = 835 MHz; σ = 0.886 S/m; ε_r = 42.139; ρ = 1000 kg/m^3
Ambient Temperature：23.7 ℃; Liquid Temperature：22.7 ℃

DASY5 Configuration
- Probe: EX3DV4 - SN7306;ConvF(9.96, 9.96, 9.96) @ 835 MHz;Calibrated: 2018/7/26
- Sensor-Surface: 1.4mm (Mechanical Surface Detection)
- Electronics: DAE4 Sn699; Calibrated: 2019/1/3
- Phantom: Twin-SAM V5.0 (30deg probe tilt); Type: QD 000 P40 CD; Serial: 1885
- Measurement SW: DASY52, Version 52.10 (2); SEMCAD X Version 14.6.12 (7450)

Pin=250mW/Area Scan (61x61x1): Interpolated grid: dx=1.500 mm, dy=1.500 mm
Maximum value of SAR (interpolated) = 3.25 W/kg

Pin=250mW/Zoom Scan (5x5x7)/Cube 0: Measurement grid: dx=8mm, dy=8mm, dz=5mm
Reference Value = 63.64 V/m; Power Drift = -0.11 dB
Peak SAR (extrapolated) = 3.67 W/kg
SAR(1 g) = 2.42 W/kg; SAR(10 g) = 1.59 W/kg
Maximum value of SAR (measured) = 3.24 W/kg

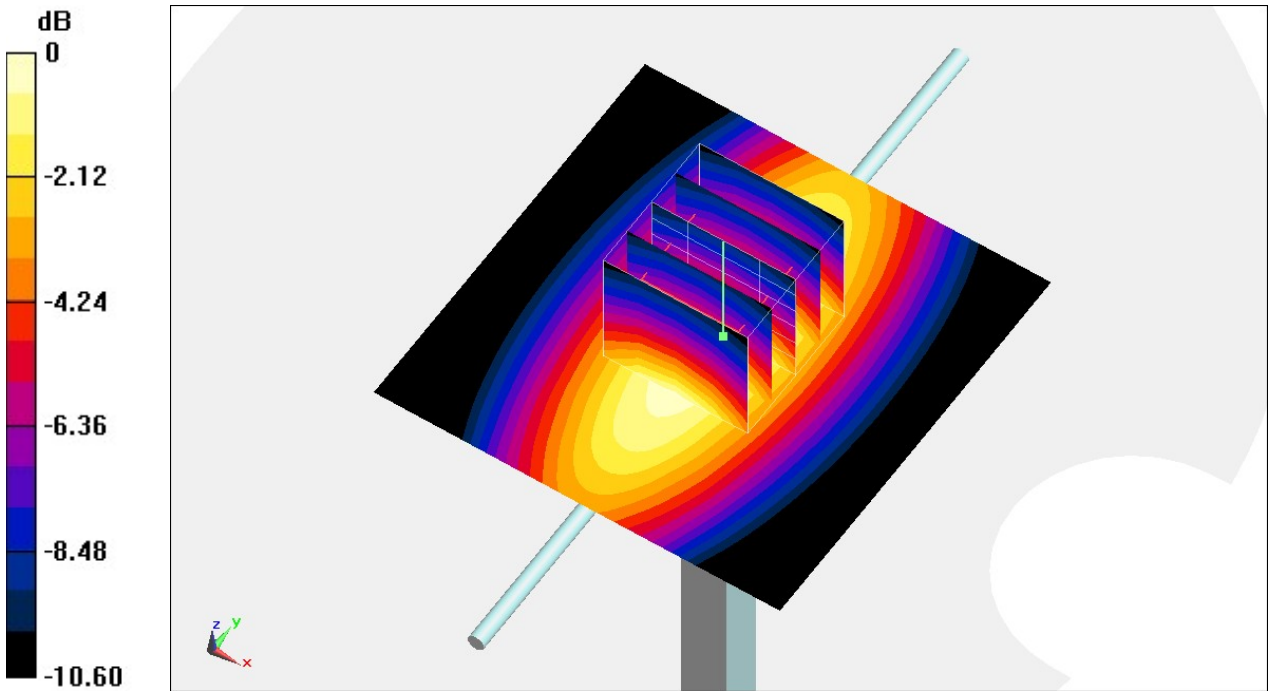

0 dB = 3.24 W/kg = 5.11 dBW/kg

System Check_Head_835MHz

DUT: D835V2-499

Communication System: CW; Frequency: 835 MHz;Duty Cycle: 1:1
Medium: HSL_850_190616 Medium parameters used: f = 835 MHz; σ = 0.884 S/m; ε_r = 42.13; ρ = 1000 kg/m^3
Ambient Temperature：23.8 ℃; Liquid Temperature：22.8 ℃

DASY5 Configuration:
- Probe: ES3DV3 - SN3270; ConvF(6.39, 6.39, 6.39) @ 835 MHz; Calibrated: 2018/9/24
- Sensor-Surface: 3mm (Mechanical Surface Detection)
- Electronics: DAE3 Sn577; Calibrated: 2018/9/19
- Phantom: SAM_Right; Type: SAM; Serial: TP:1479
- Measurement SW: DASY52, Version 52.10 (2);SEMCAD X Version 14.6.12 (7470)

Pin=250mW/Area Scan (61x61x1): Interpolated grid: dx=1.500 mm, dy=1.500 mm
Maximum value of SAR (interpolated) = 2.64 W/kg

Pin=250mW/Zoom Scan (5x5x7)/Cube 0: Measurement grid: dx=8mm, dy=8mm, dz=5mm
Reference Value = 56.26 V/m; Power Drift = 0.01 dB
Peak SAR (extrapolated) = 3.29 W/kg
SAR(1 g) = 2.25 W/kg; SAR(10 g) = 1.49 W/kg
Maximum value of SAR (measured) = 2.61 W/kg

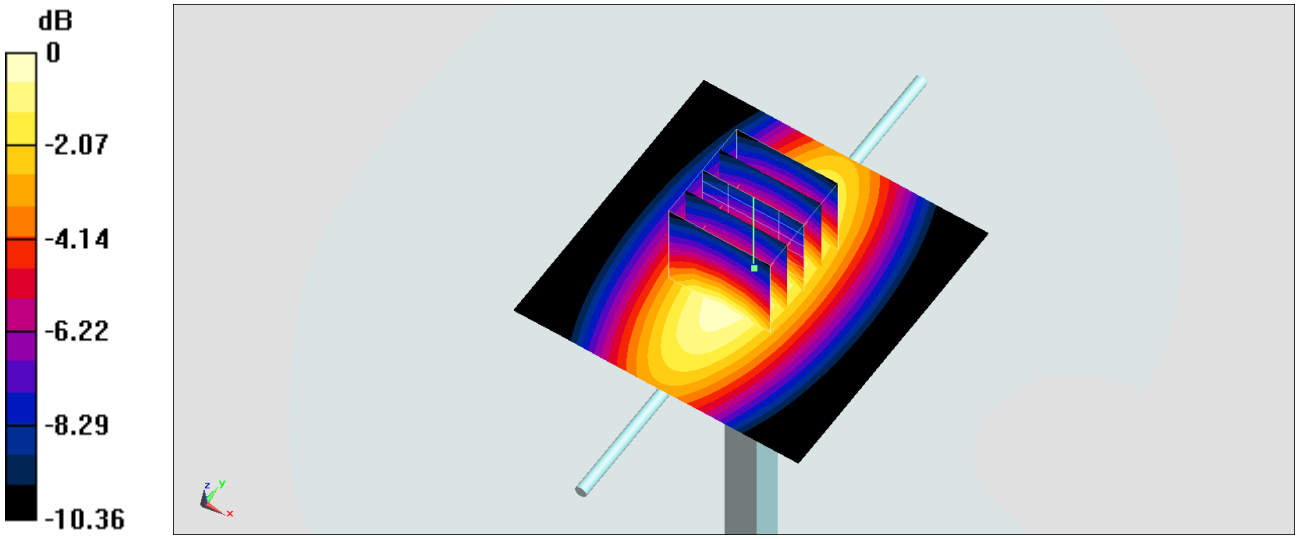

0 dB = 2.61 W/kg = 4.17 dBW/kg

System Check_Head_1750MHz

DUT: D1750V2-1068

Communication System: CW; Frequency: 1750 MHz;Duty Cycle: 1:1
Medium: HSL_1750_190618 Medium parameters used: f = 1750 MHz; σ = 1.378 S/m; ε_r = 40.223; ρ = 1000 kg/m^3
Ambient Temperature：23.9 ℃; Liquid Temperature：22.9 ℃

DASY5 Configuration:
- Probe: ES3DV3 - SN3270; ConvF(5.42, 5.42, 5.42) @ 1750 MHz; Calibrated: 2018/9/24
- Sensor-Surface: 3mm (Mechanical Surface Detection)
- Electronics: DAE3 Sn577; Calibrated: 2018/9/19
- Phantom: SAM_Left; Type: QD000P40CD; Serial: TP:1477
- Measurement SW: DASY52, Version 52.10 (2);SEMCAD X Version 14.6.12 (7470)

Pin=250mW/Area Scan (61x61x1): Interpolated grid: dx=1.500 mm, dy=1.500 mm
Maximum value of SAR (interpolated) = 11.2 W/kg

Pin=250mW/Zoom Scan (5x5x7)/Cube 0: Measurement grid: dx=8mm, dy=8mm, dz=5mm
Reference Value = 91.01 V/m; Power Drift = -0.08 dB
Peak SAR (extrapolated) = 14.8 W/kg
SAR(1 g) = 8.73 W/kg; SAR(10 g) = 4.78 W/kg
Maximum value of SAR (measured) = 10.7 W/kg

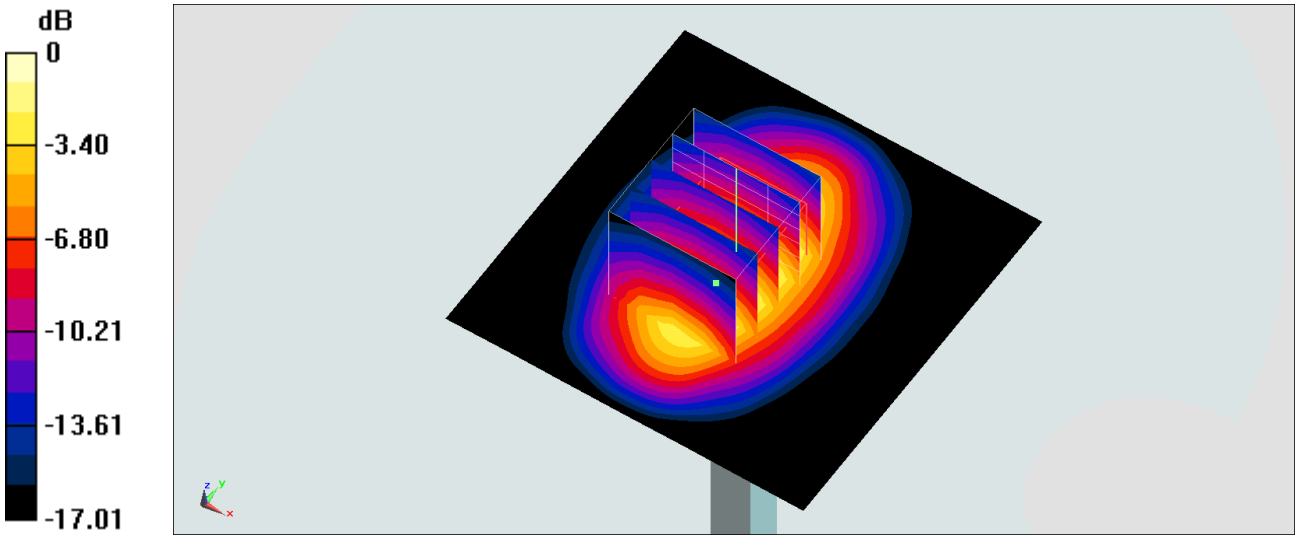

0 dB = 10.7 W/kg = 10.29 dBW/kg

System Check_Head_1750MHz

DUT: D1750V2-1068

Communication System: CW; Frequency: 1750 MHz;Duty Cycle: 1:1
Medium: HSL_1750_190621 Medium parameters used: f = 1750 MHz; σ = 1.377 S/m; ε_r = 40.223; ρ = 1000 kg/m^3
Ambient Temperature：23.6 ℃; Liquid Temperature：22.6 ℃

DASY5 Configuration:
- Probe: ES3DV3 - SN3124; ConvF(5.18, 5.18, 5.18) @ 1750 MHz; Calibrated: 2019/1/15
- Sensor-Surface: 3mm (Mechanical Surface Detection)
- Electronics: DAE4 Sn316; Calibrated: 2019/1/3
- Phantom: SAM_Left; Type: QD000P40CD; Serial: TP:1477
- Measurement SW: DASY52, Version 52.10 (2);SEMCAD X Version 14.6.12 (7470)

Pin=250mW/Area Scan (61x61x1): Interpolated grid: dx=1.500 mm, dy=1.500 mm
Maximum value of SAR (interpolated) = 12.3 W/kg

Pin=250mW/Zoom Scan (5x5x7)/Cube 0: Measurement grid: dx=8mm, dy=8mm, dz=5mm
Reference Value = 96.58 V/m; Power Drift = 0.01 dB
Peak SAR (extrapolated) = 17.7 W/kg
SAR(1 g) = 9.62 W/kg; SAR(10 g) = 5.01 W/kg
Maximum value of SAR (measured) = 12.2 W/kg

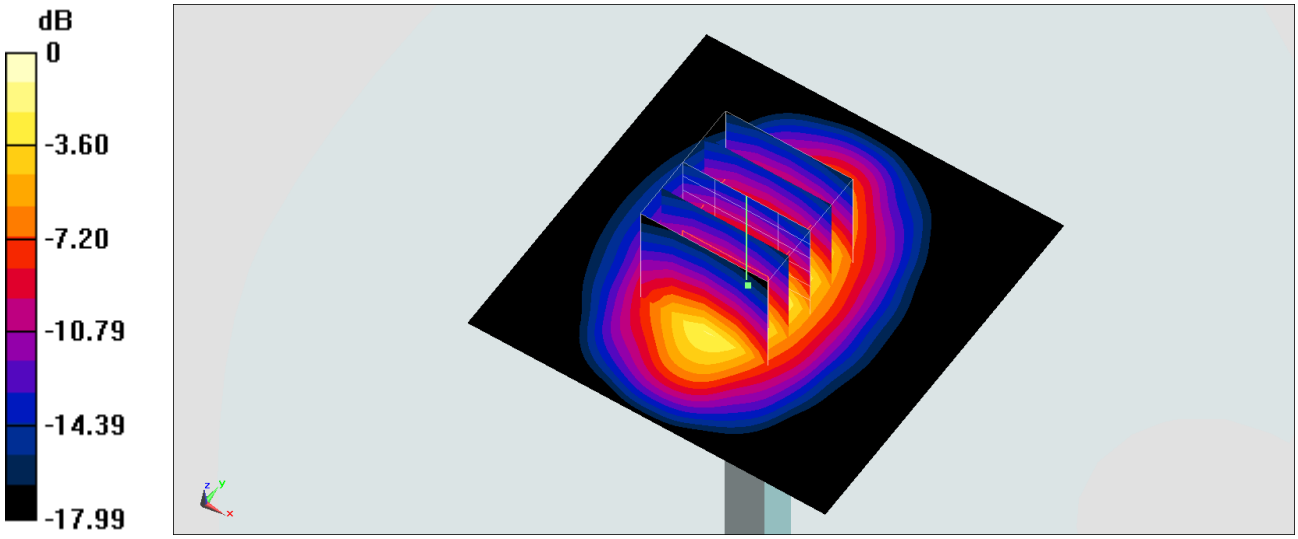

0 dB = 12.2 W/kg = 10.86 dBW/kg

System Check_Head_1900MHz

DUT: D1900V2-5d041

Communication System: CW; Frequency: 1900 MHz;Duty Cycle: 1:1
Medium: HSL_1900_190617 Medium parameters used: f = 1900 MHz; σ = 1.425 S/m; ε_r = 39.537; ρ = 1000 kg/m^3
Ambient Temperature：23.6 ℃; Liquid Temperature：22.6 ℃

DASY5 Configuration:
- Probe: ES3DV3 - SN3270; ConvF(5.17, 5.17, 5.17) @ 1900 MHz; Calibrated: 2018/9/24
- Sensor-Surface: 3mm (Mechanical Surface Detection)
- Electronics: DAE3 Sn577; Calibrated: 2018/9/19
- Phantom: SAM_Left; Type: QD000P40CD; Serial: TP:1477
- Measurement SW: DASY52, Version 52.10 (2);SEMCAD X Version 14.6.12 (7470)

Pin=250mW/Area Scan (61x61x1): Interpolated grid: dx=1.500 mm, dy=1.500 mm
Maximum value of SAR (interpolated) = 12.8 W/kg

Pin=250mW/Zoom Scan (5x5x7)/Cube 0: Measurement grid: dx=8mm, dy=8mm, dz=5mm
Reference Value = 90.16 V/m; Power Drift = -0.06 dB
Peak SAR (extrapolated) = 17.7 W/kg
SAR(1 g) = 9.79 W/kg; SAR(10 g) = 5.1 W/kg
Maximum value of SAR (measured) = 12.2 W/kg

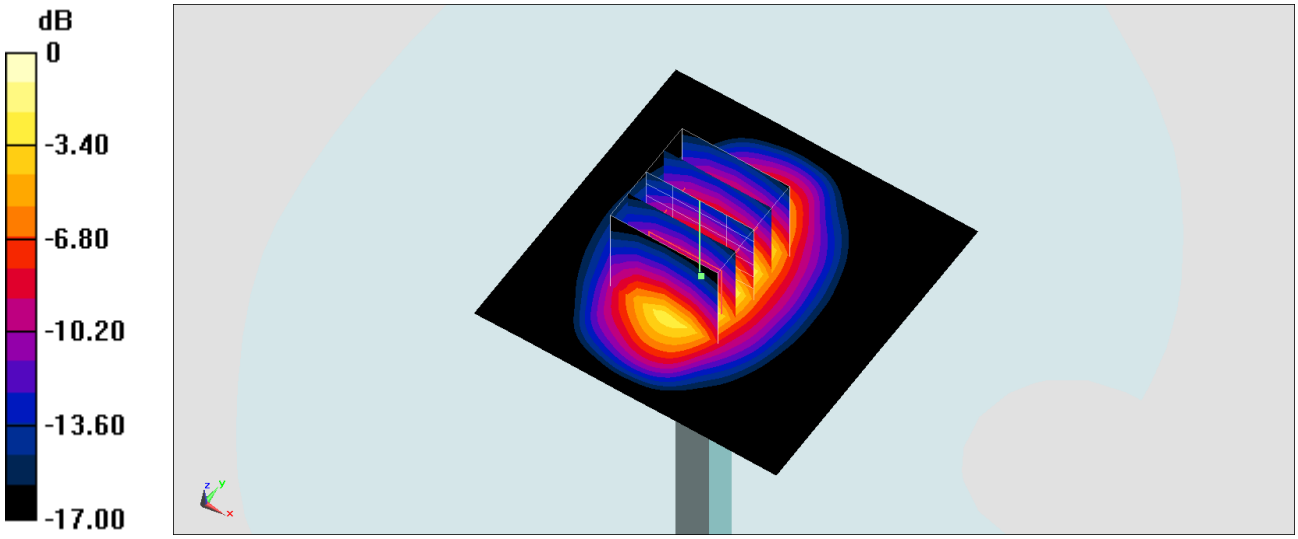

0 dB = 12.2 W/kg = 10.86 dBW/kg

System Check_Head_1900MHz

DUT: D1900V2-5d041

Communication System: CW; Frequency: 1900 MHz;Duty Cycle: 1:1
Medium: HSL_1900_190617 Medium parameters used: f = 1900 MHz; σ = 1.425 S/m; ε_r = 39.537; ρ = 1000 kg/m^3
Ambient Temperature：23.6 ℃; Liquid Temperature：22.6 ℃

DASY5 Configuration:
- Probe: ES3DV3 - SN3124; ConvF(4.95, 4.95, 4.95) @ 1900 MHz; Calibrated: 2019/1/15
- Sensor-Surface: 3mm (Mechanical Surface Detection)
- Electronics: DAE4 Sn316; Calibrated: 2019/1/3
- Phantom: SAM_Left; Type: QD000P40CD; Serial: TP:1477
- Measurement SW: DASY52, Version 52.10 (2);SEMCAD X Version 14.6.12 (7470)

Pin=250mW/Area Scan (61x61x1): Interpolated grid: dx=1.500 mm, dy=1.500 mm
Maximum value of SAR (interpolated) = 13.7 W/kg

Pin=250mW/Zoom Scan (5x5x7)/Cube 0: Measurement grid: dx=8mm, dy=8mm, dz=5mm
Reference Value = 101.2 V/m; Power Drift = -0.05 dB
Peak SAR (extrapolated) = 19.9 W/kg
SAR(1 g) = 10.5 W/kg; SAR(10 g) = 5.37 W/kg
Maximum value of SAR (measured) = 13.4 W/kg

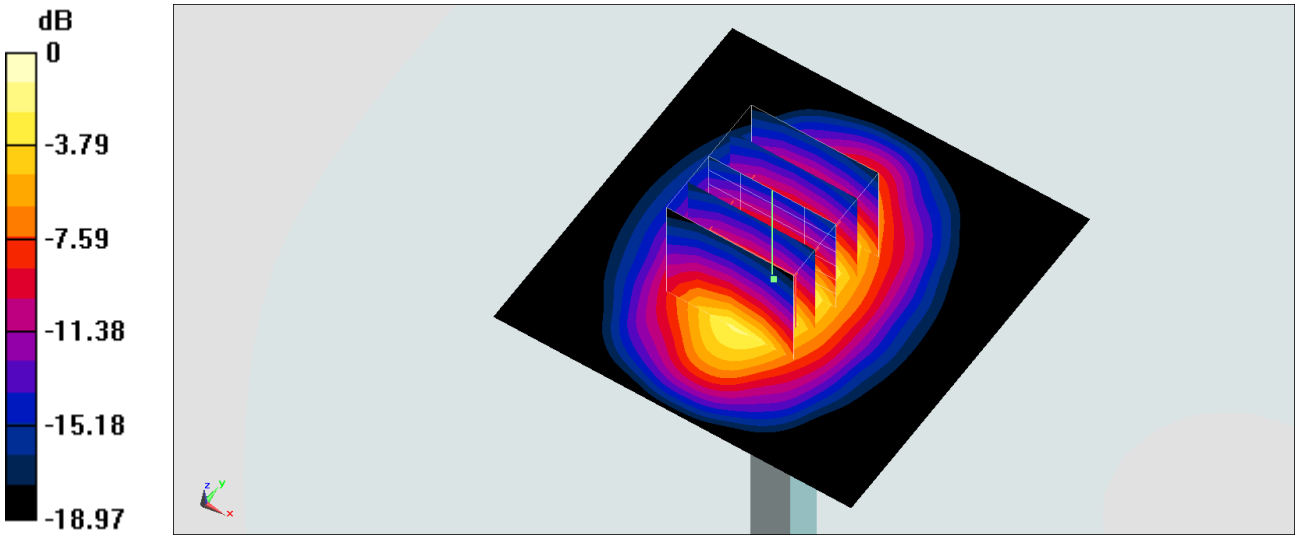

0 dB = 13.4 W/kg = 11.27 dBW/kg

System Check_Head_1900MHz

DUT: D1900V2-5d041

Communication System: CW; Frequency: 1900 MHz;Duty Cycle: 1:1
Medium: HSL_1900_190620 Medium parameters used: f = 1900 MHz; σ = 1.424 S/m; ε_r = 39.547; ρ = 1000 kg/m^3
Ambient Temperature：23.4 ℃; Liquid Temperature：22.4 ℃

DASY5 Configuration:
- Probe: ES3DV3 - SN3124; ConvF(4.95, 4.95, 4.95) @ 1900 MHz; Calibrated: 2019/1/15
- Sensor-Surface: 3mm (Mechanical Surface Detection)
- Electronics: DAE4 Sn316; Calibrated: 2019/1/3
- Phantom: SAM_Right; Type: SAM; Serial: TP:1479
- Measurement SW: DASY52, Version 52.10 (2);SEMCAD X Version 14.6.12 (7470)

Pin=250mW/Area Scan (61x61x1): Interpolated grid: dx=1.500 mm, dy=1.500 mm
Maximum value of SAR (interpolated) = 13.6 W/kg

Pin=250mW/Zoom Scan (5x5x7)/Cube 0: Measurement grid: dx=8mm, dy=8mm, dz=5mm
Reference Value = 101.2 V/m; Power Drift = -0.05 dB
Peak SAR (extrapolated) = 19.9 W/kg
SAR(1 g) = 10.5 W/kg; SAR(10 g) = 5.37 W/kg
Maximum value of SAR (measured) = 13.3 W/kg

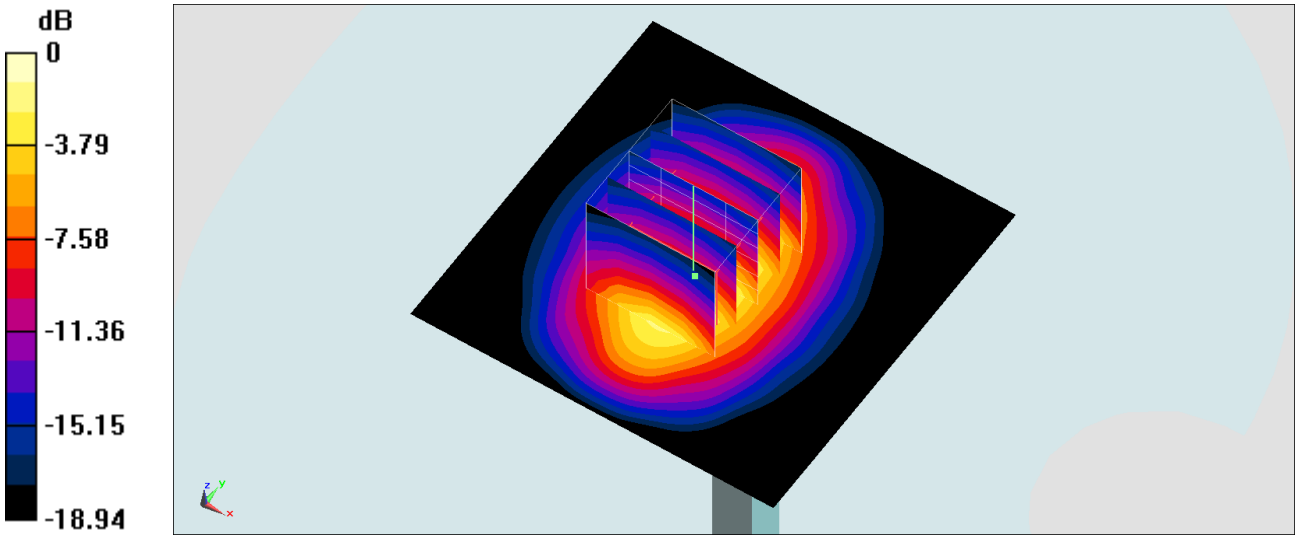

0 dB = 13.3 W/kg = 11.24 dBW/kg

System Check_Head_2450MHz

DUT: D2450V2-929

Communication System: CW; Frequency: 2450 MHz;Duty Cycle: 1:1
Medium: HSL_2450_190514 Medium parameters used: f = 2450 MHz; σ = 1.762 S/m; ε_r = 38.81; ρ = 1000 kg/m^3
Ambient Temperature：23.5 ℃; Liquid Temperature：22.5 ℃

DASY5 Configuration:
- Probe: EX3DV4 - SN3931; ConvF(7.54, 7.54, 7.54) @ 2450 MHz; Calibrated: 2018/9/27
- Sensor-Surface: 1.4mm (Mechanical Surface Detection)
- Electronics: DAE4 Sn1399; Calibrated: 2018/11/16
- Phantom: SAM_Left; Type: QD000P40CD; Serial: TP:1682
- Measurement SW: DASY52, Version 52.10 (2);SEMCAD X Version 14.6.12 (7450)

Pin=250mW/Area Scan (71x71x1): Interpolated grid: dx=1.200 mm, dy=1.200 mm
Maximum value of SAR (interpolated) = 22.5 W/kg

Pin=250mW/Zoom Scan (7x7x7)/Cube 0: Measurement grid: dx=5mm, dy=5mm, dz=5mm
Reference Value = 111.9 V/m; Power Drift = 0.02 dB
Peak SAR (extrapolated) = 27.3 W/kg
SAR(1 g) = 13 W/kg; SAR(10 g) = 6 W/kg
Maximum value of SAR (measured) = 22.1 W/kg

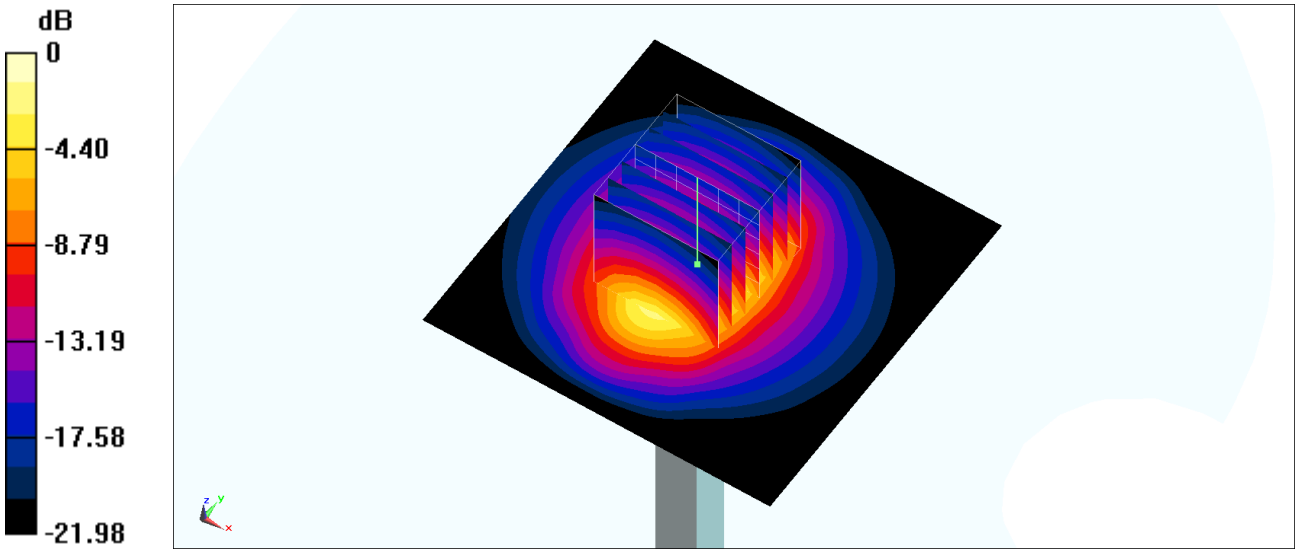

0 dB = 22.1 W/kg = 13.44 dBW/kg

Test Laboratory: Sporton International Inc. SAR/HAC Testing Lab Date: 2019/5/21

System Check_Head_2450MHz

DUT: D2450V2-929

Communication System: CW; Frequency: 2450 MHz;Duty Cycle: 1:1
Medium: HSL_2450_190521 Medium parameters used: f = 2450 MHz; σ = 1.797 S/m; ε_r = 39.895; ρ = 1000 kg/m^3
Ambient Temperature：23.6 ℃; Liquid Temperature：22.6 ℃

DASY5 Configuration
- Probe: EX3DV4 - SN7306;ConvF(7.43, 7.43, 7.43) @ 2450 MHz;Calibrated: 2018/7/26
- Sensor-Surface: 1.4mm (Mechanical Surface Detection)
- Electronics: DAE3 Sn360; Calibrated: 2018/10/29
- Phantom: Twin-SAM V5.0 (30deg probe tilt); Type: QD 000 P40 CD; Serial: 1885
- Measurement SW: DASY52, Version 52.10 (2); SEMCAD X Version 14.6.12 (7450)

Pin=250mW/Area Scan (81x81x1): Interpolated grid: dx=1.200 mm, dy=1.200 mm
Maximum value of SAR (interpolated) = 21.6 W/kg

Pin=250mW/Zoom Scan (7x7x7)/Cube 0: Measurement grid: dx=5mm, dy=5mm, dz=5mm
Reference Value = 114.0 V/m; Power Drift = -0.03 dB
Peak SAR (extrapolated) = 26.4 W/kg
SAR(1 g) = 12.7 W/kg; SAR(10 g) = 5.86 W/kg
Maximum value of SAR (measured) = 21.3 W/kg

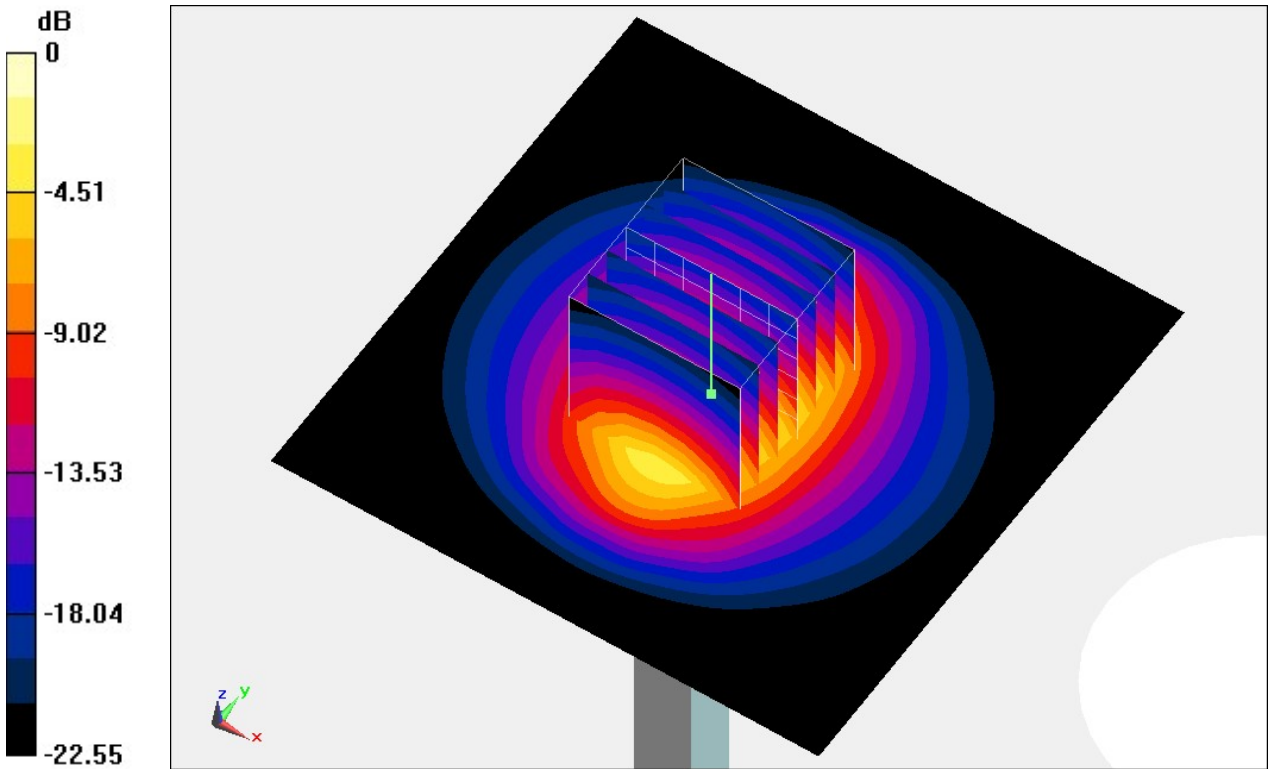

0 dB = 21.3 W/kg = 13.28 dBW/kg

System Check_Head_2600MHz

DUT: D2600V2-1008

Communication System: CW; Frequency: 2600 MHz;Duty Cycle: 1:1
Medium: HSL_2600_190618 Medium parameters used: f = 2600 MHz; σ = 1.94 S/m; ε_r = 37.882; ρ = 1000 kg/m^3
Ambient Temperature：23.5 ℃; Liquid Temperature：22.5 ℃

DASY5 Configuration:
- Probe: ES3DV3 - SN3124; ConvF(4.37, 4.37, 4.37) @ 2600 MHz; Calibrated: 2019/1/15
- Sensor-Surface: 3mm (Mechanical Surface Detection)
- Electronics: DAE4 Sn316; Calibrated: 2019/1/3
- Phantom: SAM_Left; Type: QD000P40CD; Serial: TP:1477
- Measurement SW: DASY52, Version 52.10 (2);SEMCAD X Version 14.6.12 (7470)

Pin=250mW/Area Scan (81x81x1): Interpolated grid: dx=1.200 mm, dy=1.200 mm
Maximum value of SAR (interpolated) = 17.7 W/kg

Pin=250mW/Zoom Scan (7x7x7)/Cube 0: Measurement grid: dx=5mm, dy=5mm, dz=5mm
Reference Value = 95.06 V/m; Power Drift = 0.17 dB
Peak SAR (extrapolated) = 28.5 W/kg
SAR(1 g) = 13.3 W/kg; SAR(10 g) = 5.95 W/kg
Maximum value of SAR (measured) = 17.7 W/kg

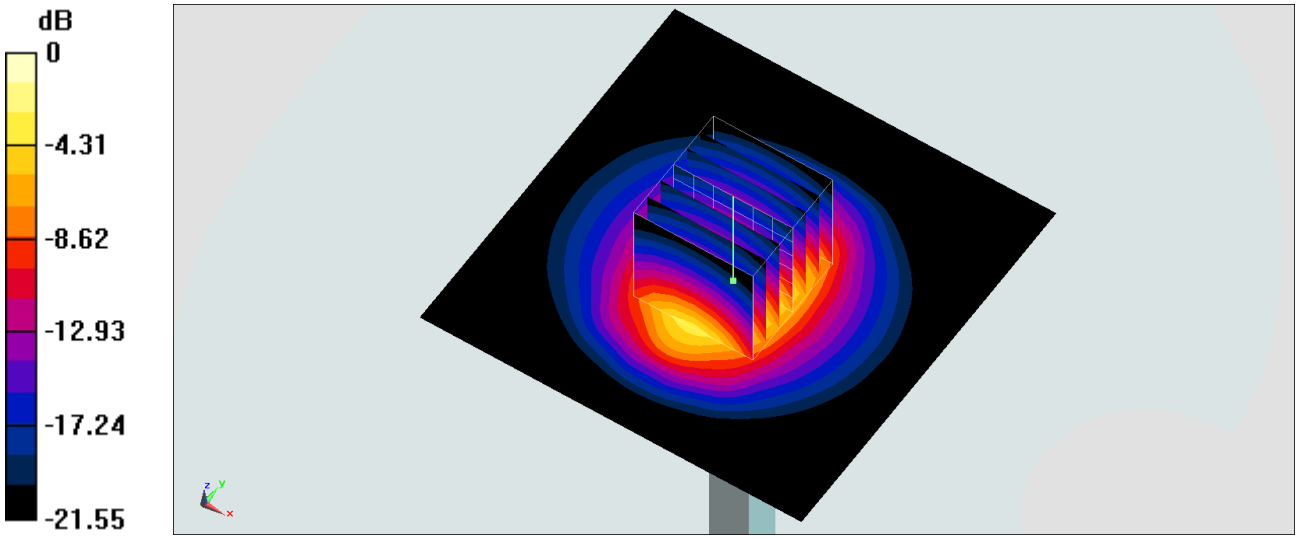

0 dB = 17.7 W/kg = 12.48 dBW/kg

System Check_Head_2600MHz

DUT: D2600V2-1008

Communication System: CW; Frequency: 2600 MHz;Duty Cycle: 1:1
Medium: HSL_2600_190619 Medium parameters used: f = 2600 MHz; σ = 1.948 S/m; ε_r = 38.002; ρ = 1000 kg/m^3
Ambient Temperature：23.3 ℃; Liquid Temperature：22.3 ℃

DASY5 Configuration:
- Probe: ES3DV3 - SN3124; ConvF(4.37, 4.37, 4.37) @ 2600 MHz; Calibrated: 2019/1/15
- Sensor-Surface: 3mm (Mechanical Surface Detection)
- Electronics: DAE4 Sn316; Calibrated: 2019/1/3
- Phantom: SAM_Left; Type: QD000P40CD; Serial: TP:1477
- Measurement SW: DASY52, Version 52.10 (2);SEMCAD X Version 14.6.12 (7470)

Pin=250mW/Area Scan (81x81x1): Interpolated grid: dx=1.200 mm, dy=1.200 mm
Maximum value of SAR (interpolated) = 18.5 W/kg

Pin=250mW/Zoom Scan (7x7x7)/Cube 0: Measurement grid: dx=5mm, dy=5mm, dz=5mm
Reference Value = 97.51 V/m; Power Drift = -0.02 dB
Peak SAR (extrapolated) = 29.0 W/kg
SAR(1 g) = 13.4 W/kg; SAR(10 g) = 6.05 W/kg
Maximum value of SAR (measured) = 18.0 W/kg

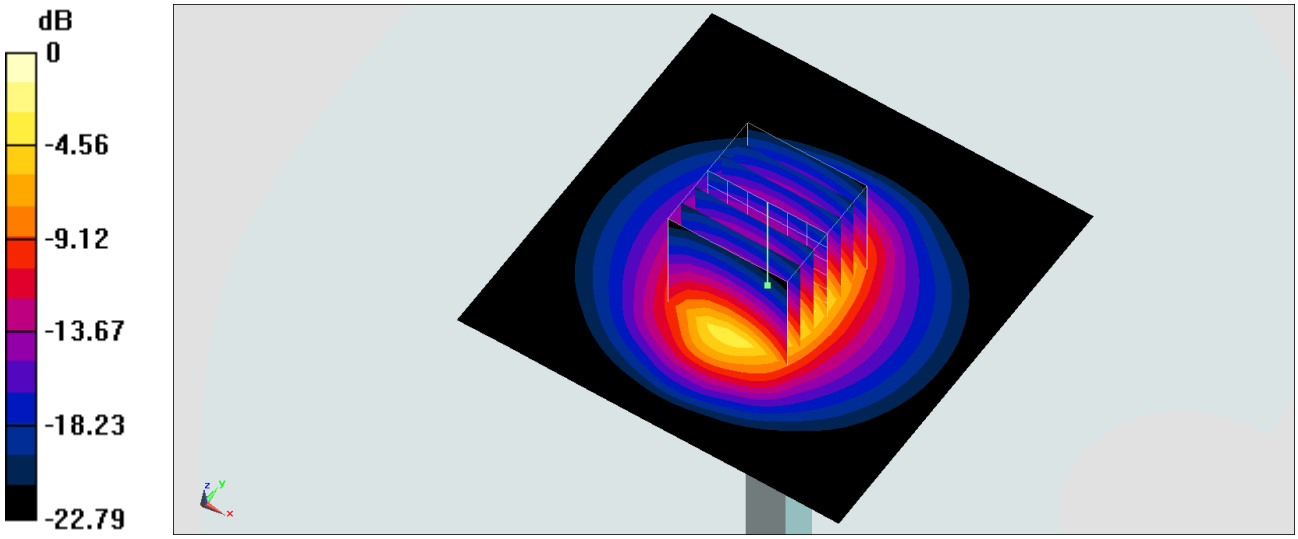

0 dB = 18.0 W/kg = 12.55 dBW/kg

System Check_Head_2600MHz

DUT: D2600V2-1008

Communication System: CW; Frequency: 2600 MHz;Duty Cycle: 1:1
Medium: HSL_2600_190621 Medium parameters used: f = 2600 MHz; σ = 1.957 S/m; ε_r = 38.122; ρ = 1000 kg/m^3
Ambient Temperature：23.6 ℃; Liquid Temperature：22.6 ℃

DASY5 Configuration:
- Probe: ES3DV3 - SN3124; ConvF(4.37, 4.37, 4.37) @ 2600 MHz; Calibrated: 2019/1/15
- Sensor-Surface: 3mm (Mechanical Surface Detection)
- Electronics: DAE4 Sn316; Calibrated: 2019/1/3
- Phantom: SAM_Left; Type: QD000P40CD; Serial: TP:1477
- Measurement SW: DASY52, Version 52.10 (2);SEMCAD X Version 14.6.12 (7470)

Pin=250mW/Area Scan (81x81x1): Interpolated grid: dx=1.200 mm, dy=1.200 mm
Maximum value of SAR (interpolated) = 18.6 W/kg

Pin=250mW/Zoom Scan (7x7x7)/Cube 0: Measurement grid: dx=5mm, dy=5mm, dz=5mm
Reference Value = 97.51 V/m; Power Drift = -0.03 dB
Peak SAR (extrapolated) = 29.2 W/kg
SAR(1 g) = 13.4 W/kg; SAR(10 g) = 6.07 W/kg
Maximum value of SAR (measured) = 18.0 W/kg

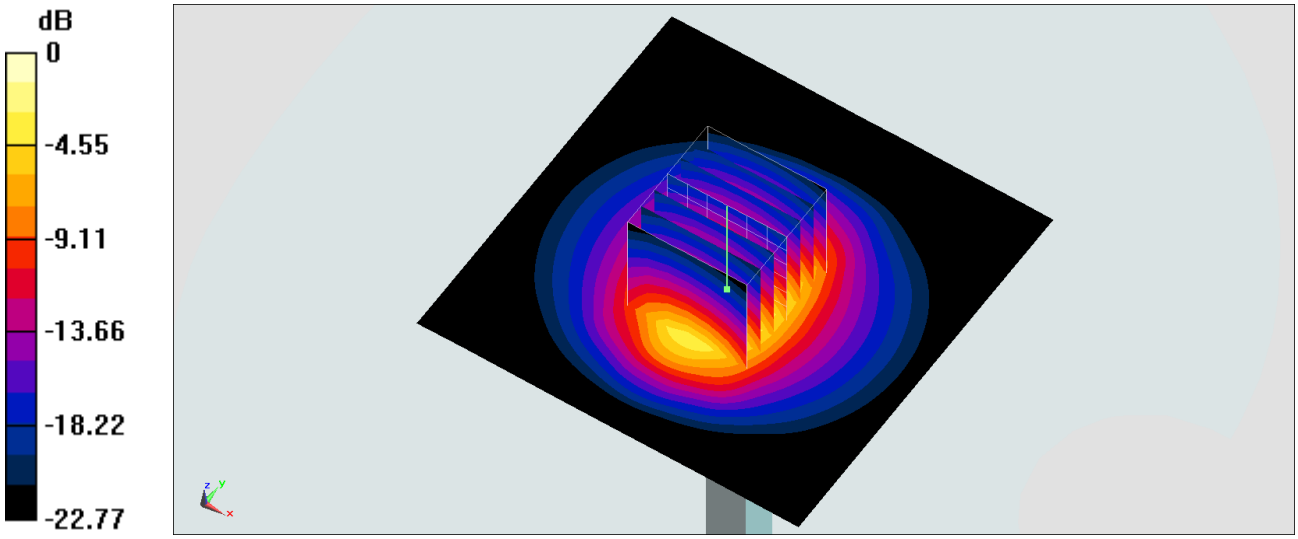

0 dB = 18.0 W/kg = 12.55 dBW/kg

System Check_Head_5250MHz

DUT: D5GHzV2-1006

Communication System: CW; Frequency: 5250 MHz;Duty Cycle: 1:1
Medium: HSL_5G_190516 Medium parameters used : f = 5250 MHz; σ = 4.579 S/m; ε_r = 36.971; ρ = 1000 kg/m^3
Ambient Temperature：23.4 ℃; Liquid Temperature：22.4 ℃

DASY5 Configuration:
- Probe: EX3DV4 - SN3931; ConvF(5.12, 5.12, 5.12) @ 5250 MHz; Calibrated: 2018/9/27
- Sensor-Surface: 1.4mm (Mechanical Surface Detection)
- Electronics: DAE4 Sn1399; Calibrated: 2018/11/16
- Phantom: SAM_Left; Type: QD000P40CD; Serial: TP:1682
- Measurement SW: DASY52, Version 52.10 (2);SEMCAD X Version 14.6.12 (7450)

Pin=100mW/Area Scan (71x71x1): Interpolated grid: dx=1.000 mm, dy=1.000 mm
Maximum value of SAR (interpolated) = 19.8 W/kg

Pin=100mW/Zoom Scan (7x7x7)/Cube 0: Measurement grid: dx=4mm, dy=4mm, dz=1.4mm
Reference Value = 69.45 V/m; Power Drift = -0.05 dB
Peak SAR (extrapolated) = 29.8 W/kg
SAR(1 g) = 7.71 W/kg; SAR(10 g) = 2.17 W/kg
Maximum value of SAR (measured) = 18.2 W/kg

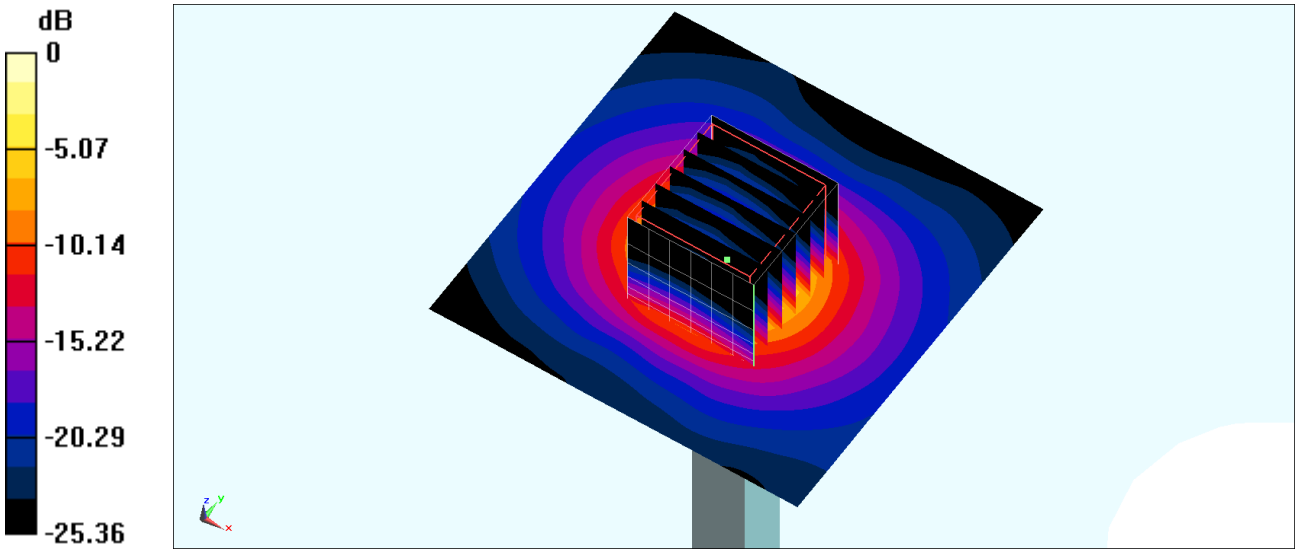

0 dB = 18.2 W/kg = 12.60 dBW/kg

System Check_Head_5600MHz

DUT: D5GHzV2-1006

Communication System: CW; Frequency: 5600 MHz;Duty Cycle: 1:1
Medium: HSL_5G_190522 Medium parameters used: f = 5600 MHz; σ = 4.99 S/m; ε_r = 35.797; ρ = 1000 kg/m^3
Ambient Temperature：23.7 ℃; Liquid Temperature：22.7 ℃

DASY5 Configuration
- Probe: EX3DV4 - SN3642;ConvF(4.28, 4.28, 4.28) @ 5600 MHz;Calibrated: 2019/4/29
- Sensor-Surface: 1.4mm (Mechanical Surface Detection)
- Electronics: DAE4 Sn914; Calibrated: 2018/12/11
- Phantom: Twin-SAM V5.0 (30deg probe tilt); Type: QD 000 P40 CD; Serial: 1885
- Measurement SW: DASY52, Version 52.10 (2); SEMCAD X Version 14.6.12 (7450)

Pin=100mW/Area Scan (71x71x1): Interpolated grid: dx=1.000 mm, dy=1.000 mm
Maximum value of SAR (interpolated) = 20.5 W/kg

Pin=100mW/Zoom Scan (7x7x7)/Cube 0: Measurement grid: dx=4mm, dy=4mm, dz=1.4mm
Reference Value = 67.83 V/m; Power Drift = 0.12 dB
Peak SAR (extrapolated) = 36.3 W/kg
SAR(1 g) = 8.22 W/kg; SAR(10 g) = 2.25 W/kg
Maximum value of SAR (measured) = 20.7 W/kg

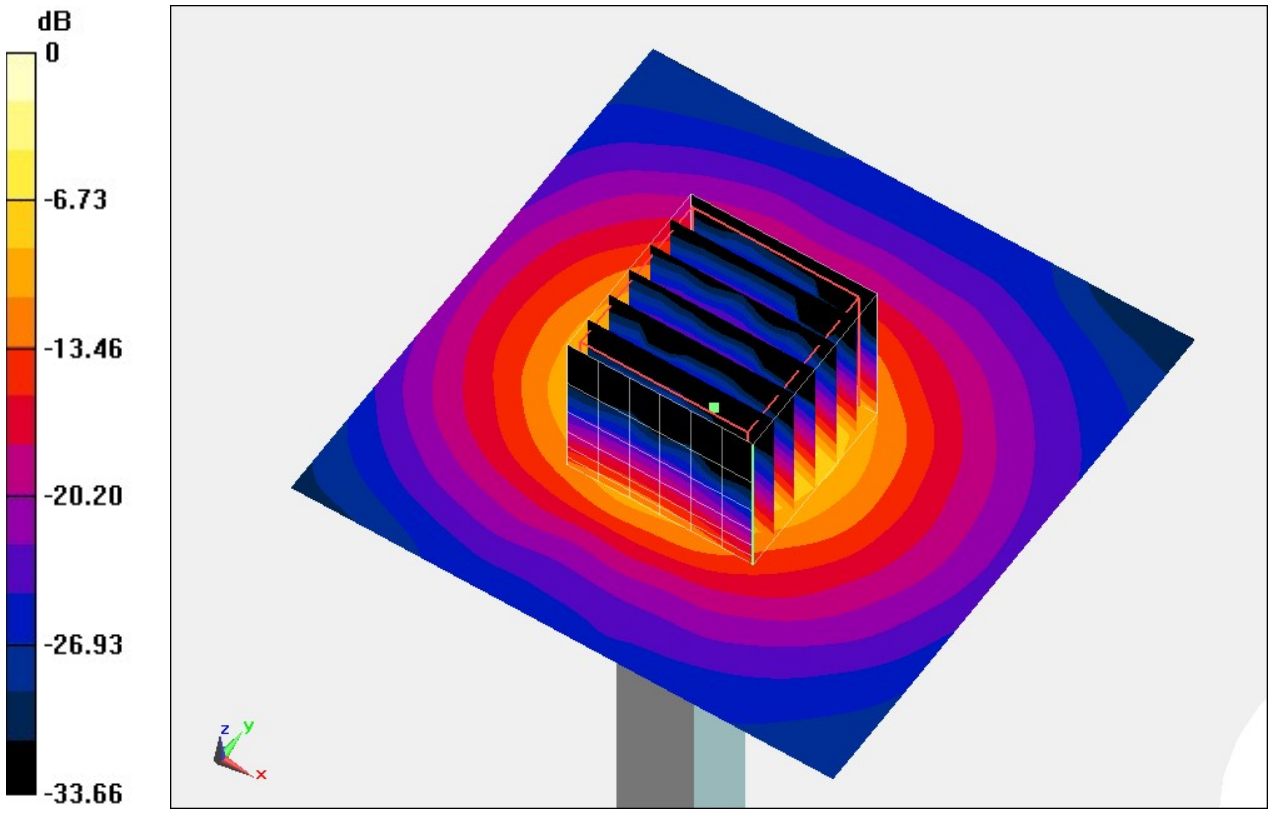

0 dB = 20.7 W/kg = 13.16 dBW/kg

Test Laboratory: Sporton International Inc. SAR/HAC Testing Lab Date: 2019/5/22

System Check_Head_5750MHz

DUT: D5GHzV2-1006

Communication System: CW; Frequency: 5750 MHz;Duty Cycle: 1:1
Medium: HSL_5G_190522 Medium parameters used: f = 5750 MHz; σ = 5.153 S/m; ε_r = 35.566; ρ = 1000 kg/m^3
Ambient Temperature：23.7 ℃; Liquid Temperature：22.7 ℃

DASY5 Configuration
- Probe: EX3DV4 - SN3642;ConvF(4.36, 4.36, 4.36) @ 5750 MHz;Calibrated: 2019/4/29
- Sensor-Surface: 1.4mm (Mechanical Surface Detection)
- Electronics: DAE4 Sn914; Calibrated: 2018/12/11
- Phantom: Twin-SAM V5.0 (30deg probe tilt); Type: QD 000 P40 CD; Serial: 1885
- Measurement SW: DASY52, Version 52.10 (2); SEMCAD X Version 14.6.12 (7450)

Pin=100mW/Area Scan (71x71x1): Interpolated grid: dx=1.000 mm, dy=1.000 mm
Maximum value of SAR (interpolated) = 19.7 W/kg

Pin=100mW/Zoom Scan (8x8x7)/Cube 0: Measurement grid: dx=4mm, dy=4mm, dz=1.4mm
Reference Value = 65.47 V/m; Power Drift = 0.03 dB
Peak SAR (extrapolated) = 35.4 W/kg
SAR(1 g) = 7.81 W/kg; SAR(10 g) = 2.21 W/kg
Maximum value of SAR (measured) = 19.7 W/kg

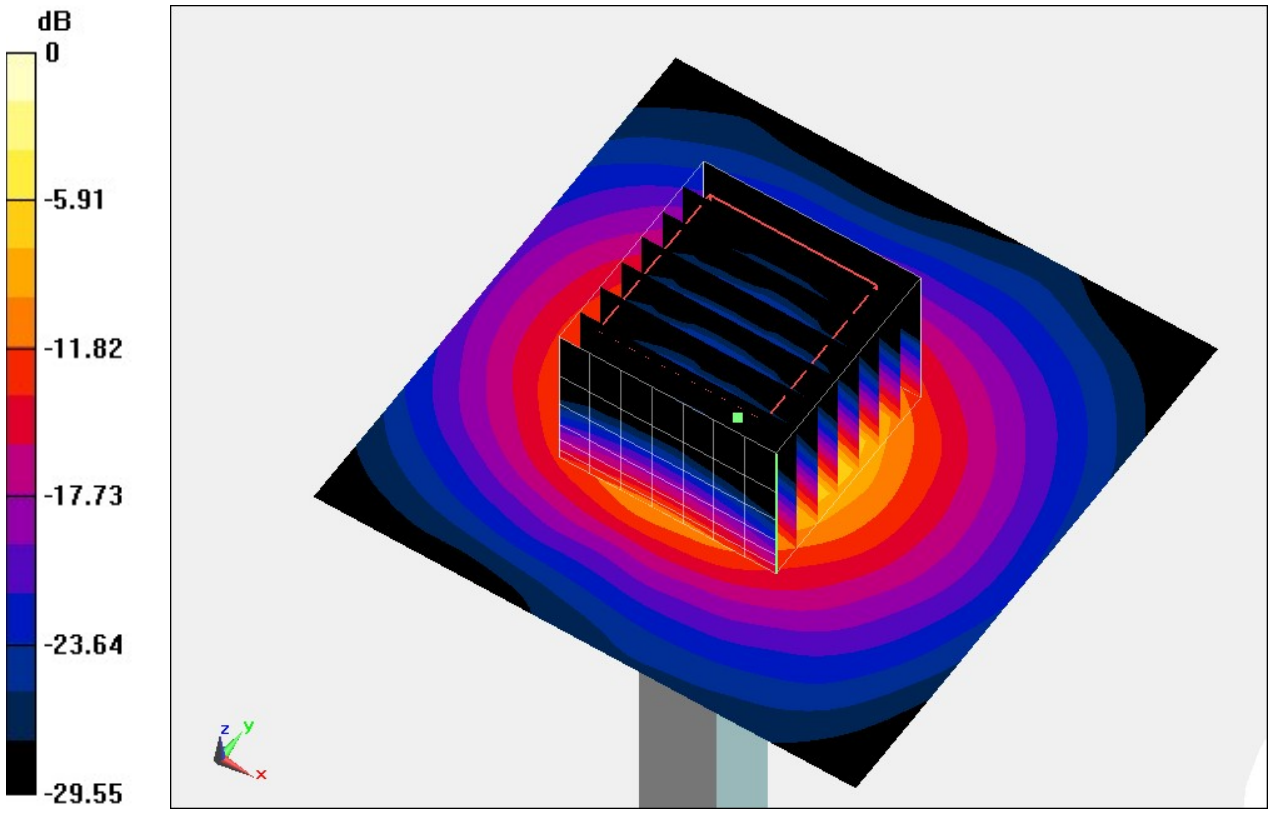

0 dB = 19.7 W/kg = 12.94 dBW/kg

System Check_Head_5750MHz

DUT: D5GHzV2-1006

Communication System: CW; Frequency: 5750 MHz;Duty Cycle: 1:1
Medium: HSL_5G_190524 Medium parameters used: f = 5750 MHz; σ = 5.239 S/m; ε_r = 35.49; ρ = 1000 kg/m^3
Ambient Temperature：23.6 ℃; Liquid Temperature：22.6 ℃

DASY5 Configuration
- Probe: EX3DV4 - SN3642;ConvF(4.36, 4.36, 4.36) @ 5750 MHz;Calibrated: 2019/4/29
- Sensor-Surface: 1.4mm (Mechanical Surface Detection)
- Electronics: DAE4 Sn914; Calibrated: 2018/12/11
- Phantom: Twin-SAM V5.0 (30deg probe tilt); Type: QD 000 P40 CD; Serial: 1885
- Measurement SW: DASY52, Version 52.10 (2); SEMCAD X Version 14.6.12 (7450)

Pin=100mW/Area Scan (71x71x1): Interpolated grid: dx=1.000 mm, dy=1.000 mm
Maximum value of SAR (interpolated) = 21.1 W/kg

Pin=100mW/Zoom Scan (7x7x7)/Cube 0: Measurement grid: dx=4mm, dy=4mm, dz=1.4mm
Reference Value = 67.20 V/m; Power Drift = 0.08 dB
Peak SAR (extrapolated) = 37.4 W/kg
SAR(1 g) = 8.47 W/kg; SAR(10 g) = 2.31 W/kg
Maximum value of SAR (measured) = 21.3 W/kg

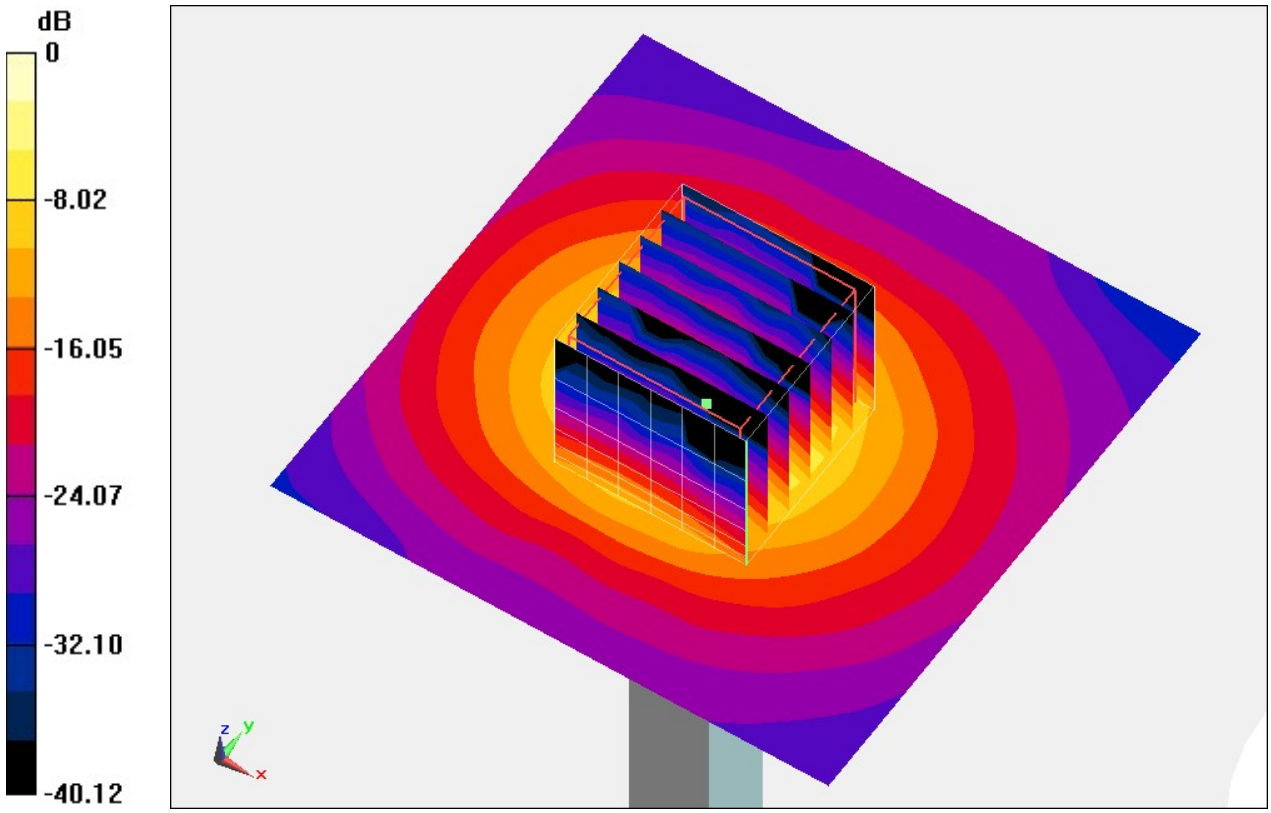

0 dB = 21.3 W/kg = 13.28 dBW/kg