Battery - Front View

Battery - Rear View

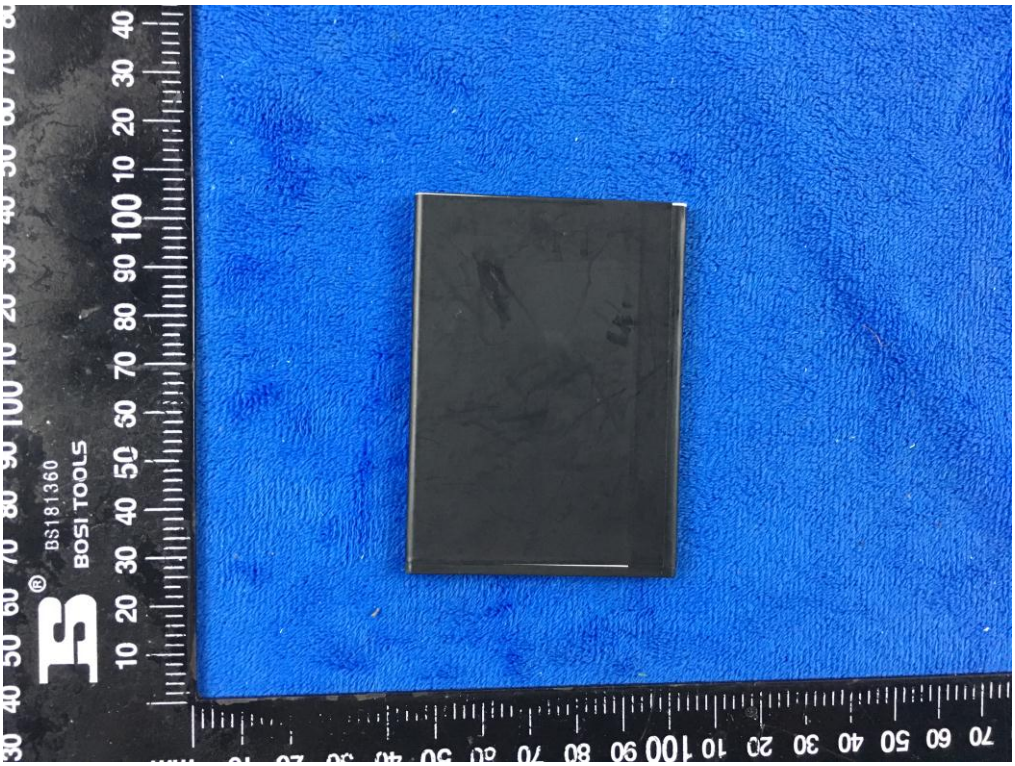

Mainboard with Shielding - Front View

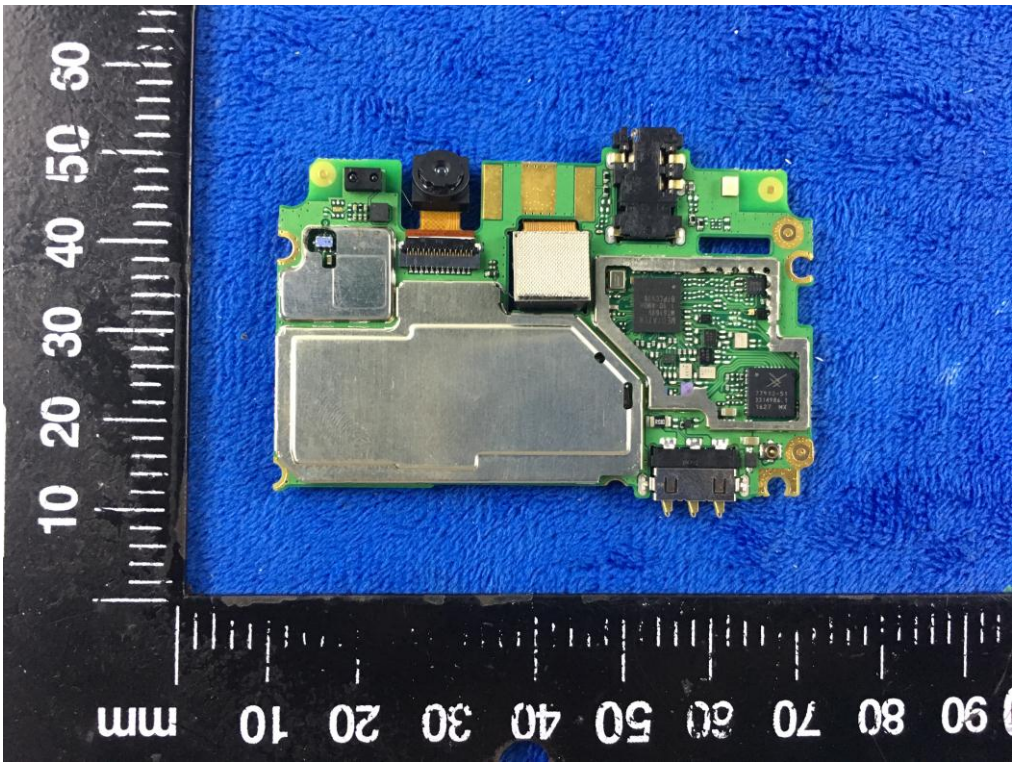

Mainboard without Shielding - Front View

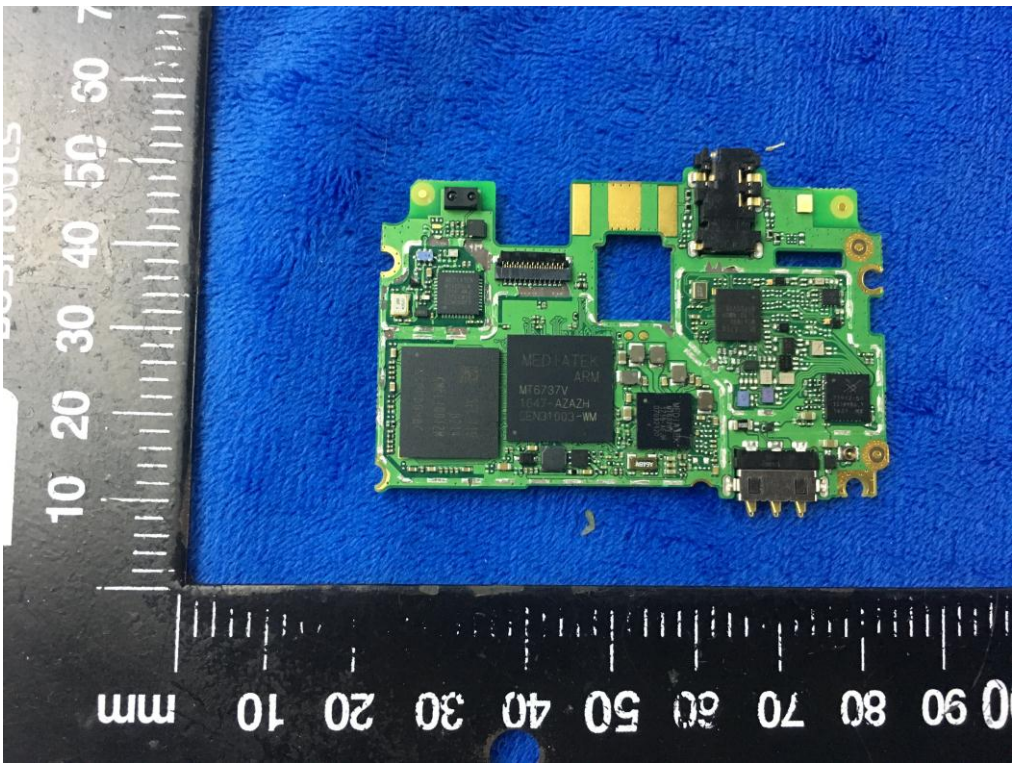

Mainboard – Rear View

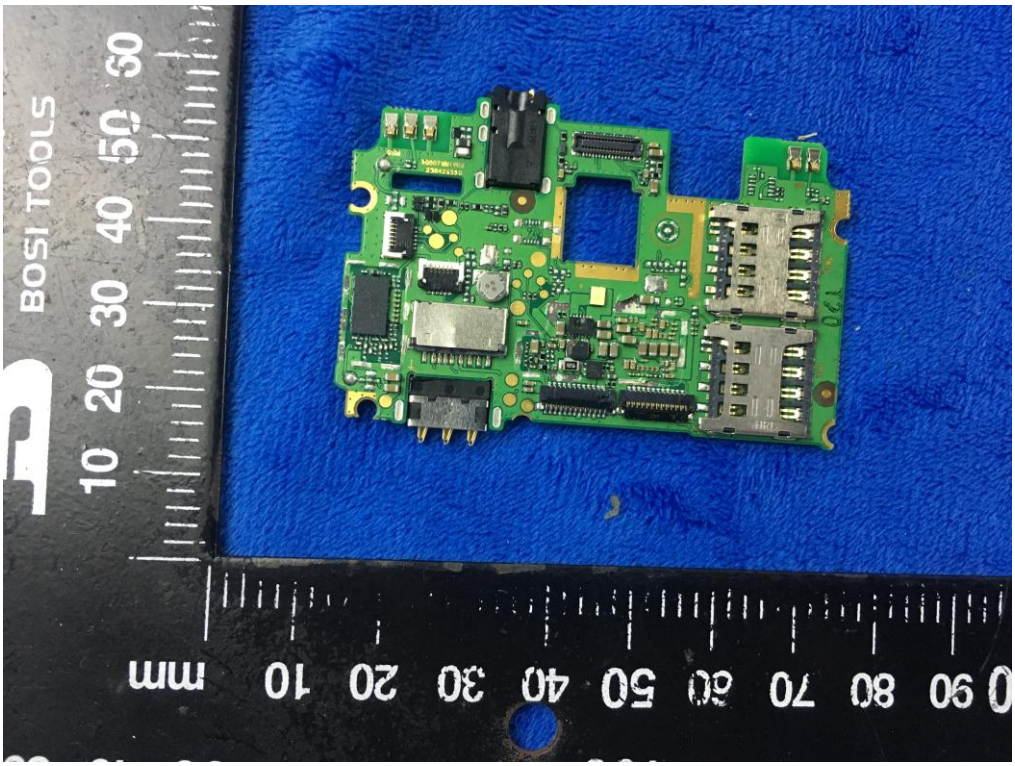

LCD – Front View

LCD – Rear View

GSM/PCS/UMTS-FDD Antenna View

WIFI/BT/BLE/GPS - Antenna View

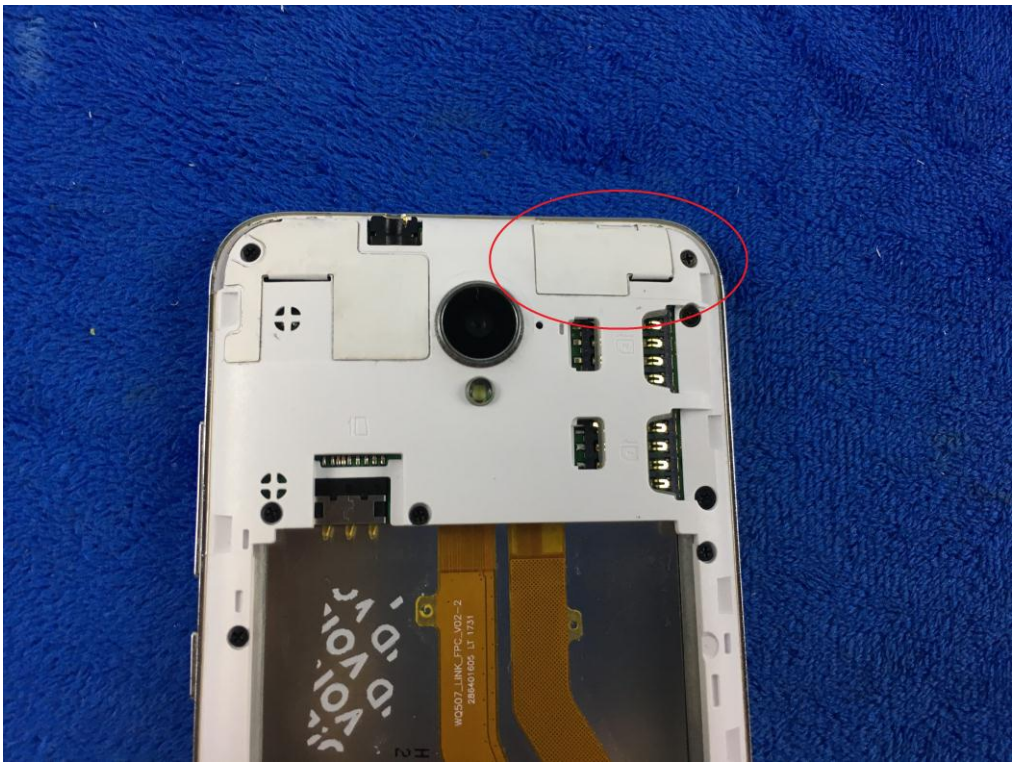

LTE - Antenna View

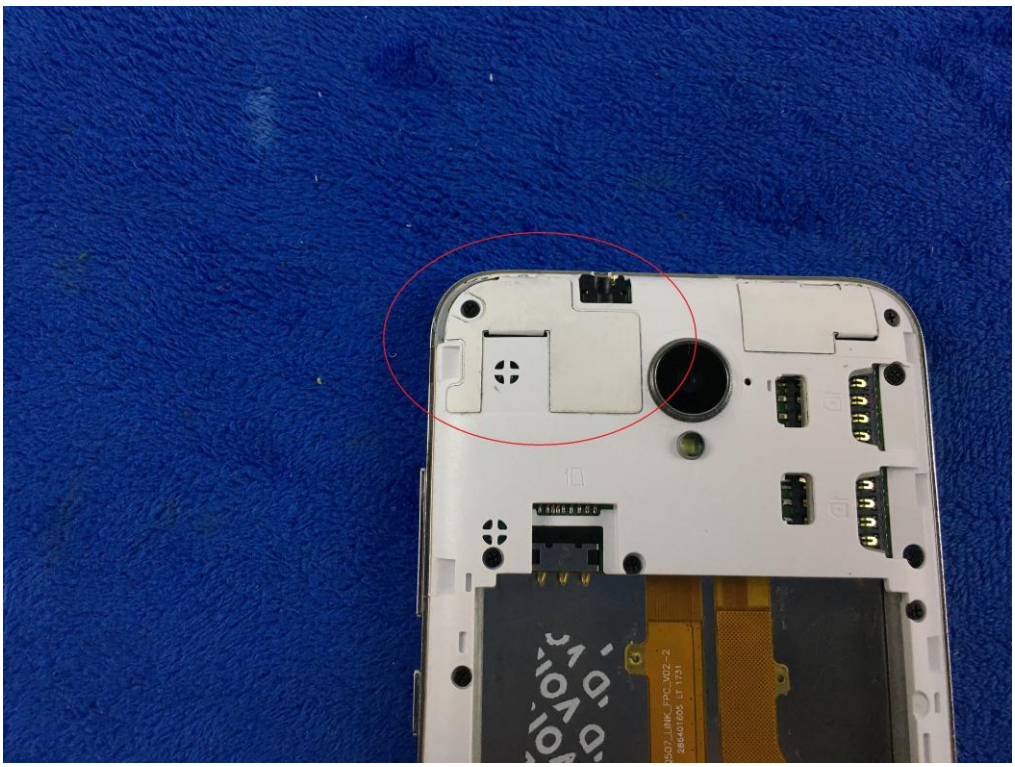

Annex B.iii. Photograph: Test Setup Photo

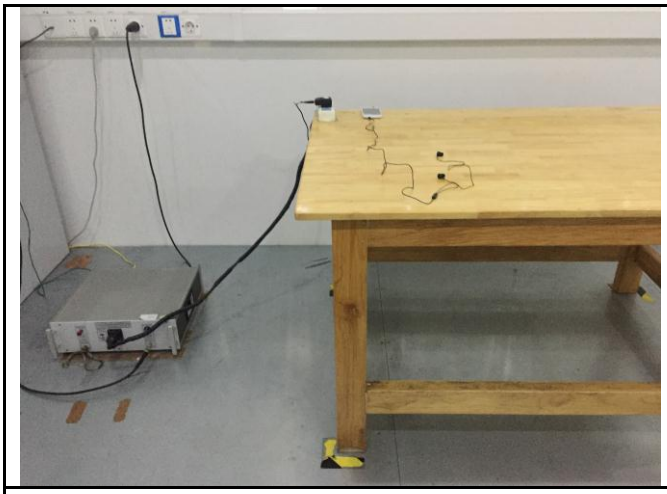	
Conducted Emissions Test Setup Front View	Conducted Emissions Test Setup Side View
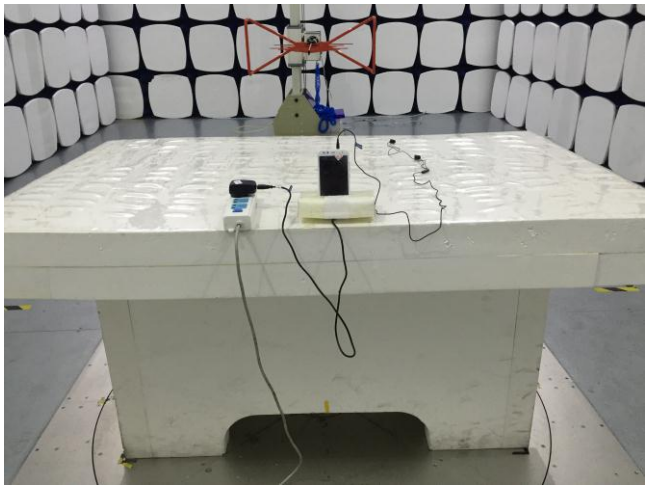	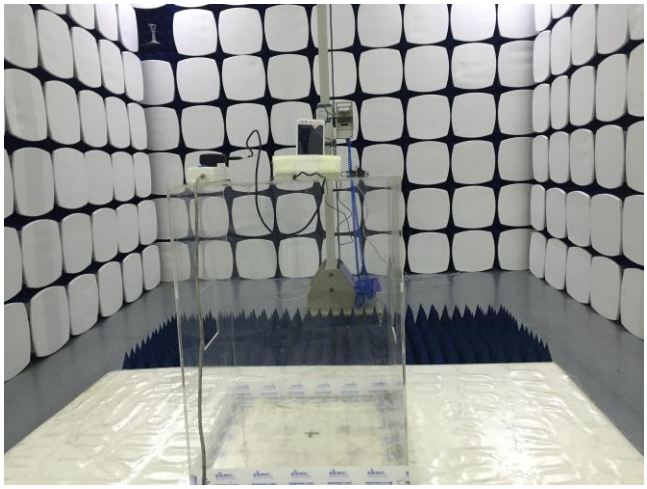
Radiated Spurious Emissions Test Setup Below 1GHz	Radiated Spurious Emissions Test Setup Above 1GHz

Annex C. TEST SETUP AND SUPPORTING EQUIPMENT

Annex C.ii. TEST SET UP BLOCK

Block Configuration Diagram for AC Line Conducted Emissions

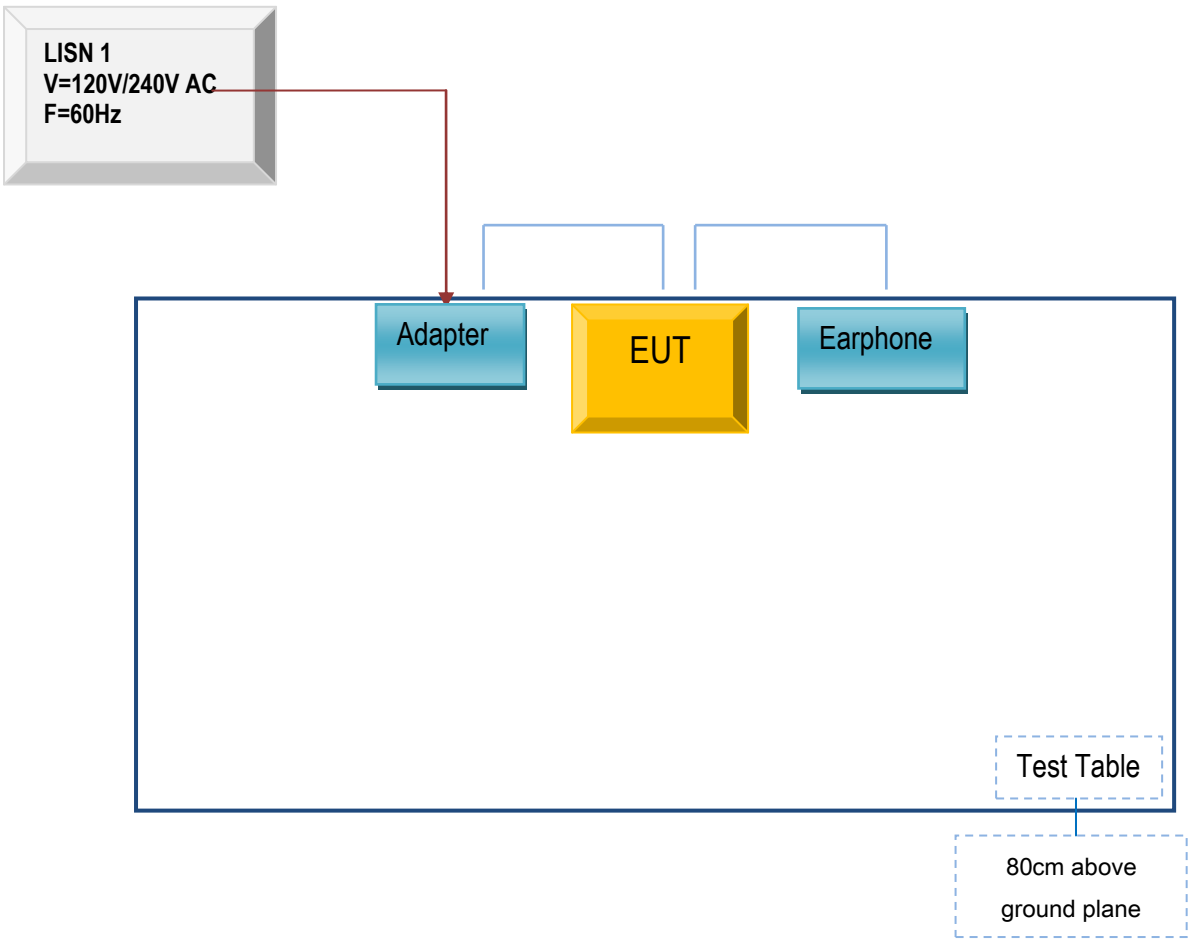

Block Configuration Diagram for Radiated Emissions （Below 1GHz）.

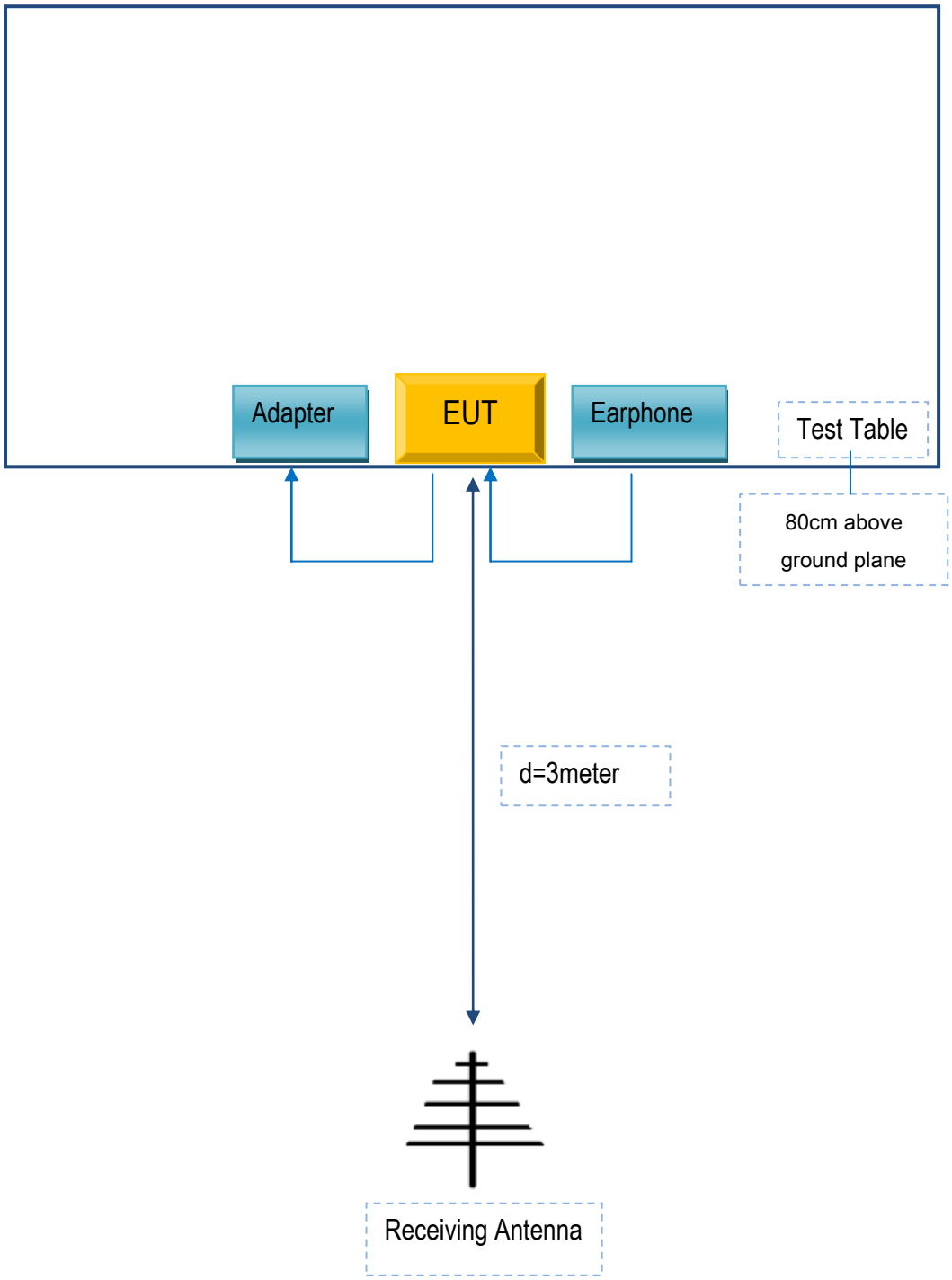

Block Configuration Diagram for Radiated Emissions （Above 1GHz）.

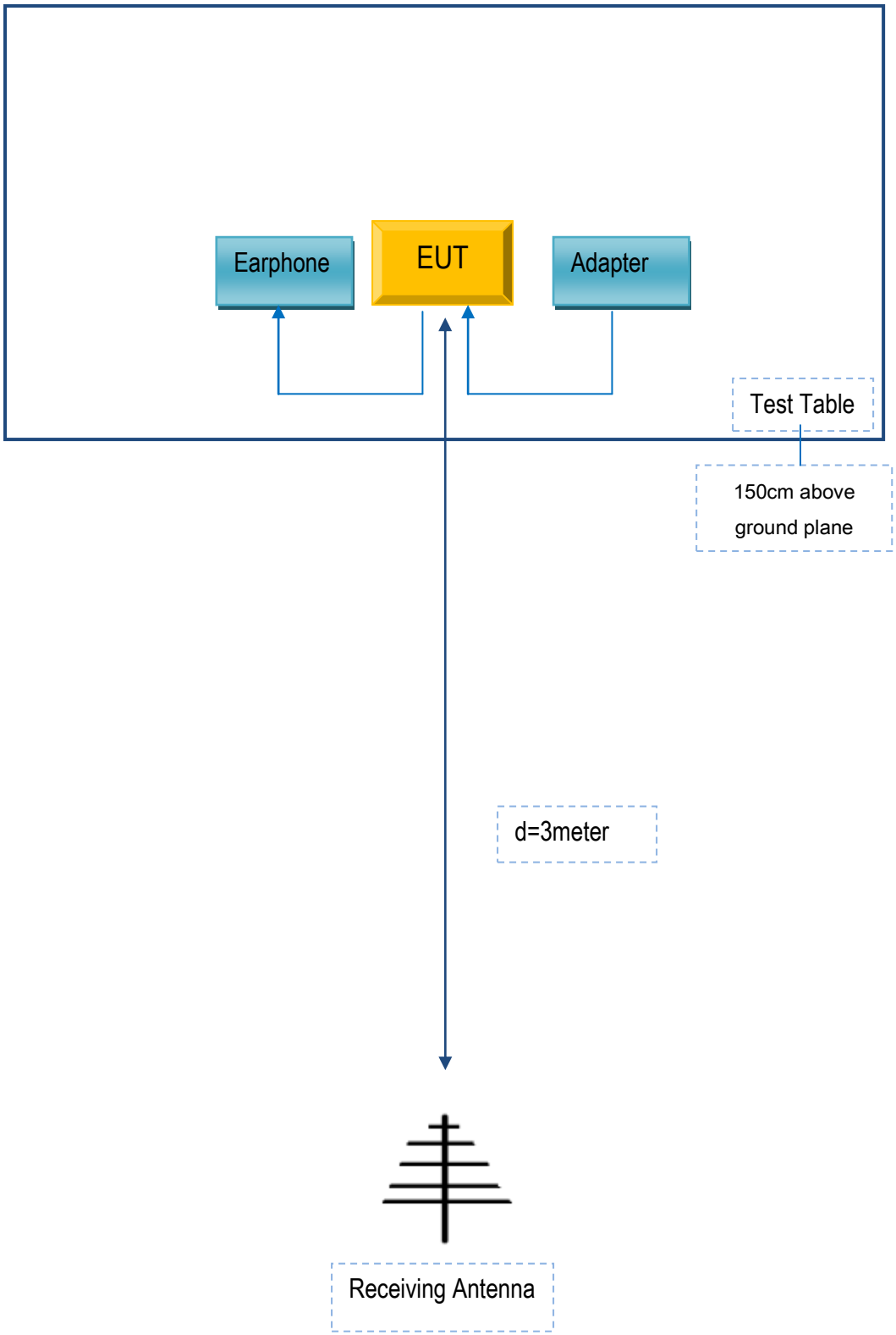

Annex C. il. SUPPORTING EQUIPMENT DESCRIPTION

The following is a description of supporting equipment and details of cables used with the EUT.

Supporting Equipment:

Manufacturer	Equipment Description	Model	Serial No
MOBIWIRE MOBILES (NINGBO) CO.,LTD	Adapter	S005UA0500100	N/A
MOBIWIRE MOBILES (NINGBO) CO.,LTD	Earphone	N504	N/A

Supporting Cable:

Cable type	Shield Type	Ferrite Core	Length	Serial No
USB Cable	Un-shielding	No	0.8m	N/A

Annex D. User Manual / Block Diagram / Schematics / Partlist

Please see the attachment

Annex E. DECLARATION OF SIMILARITY

N/A