ambient weather®

WS-4000 Quick Setup Guide

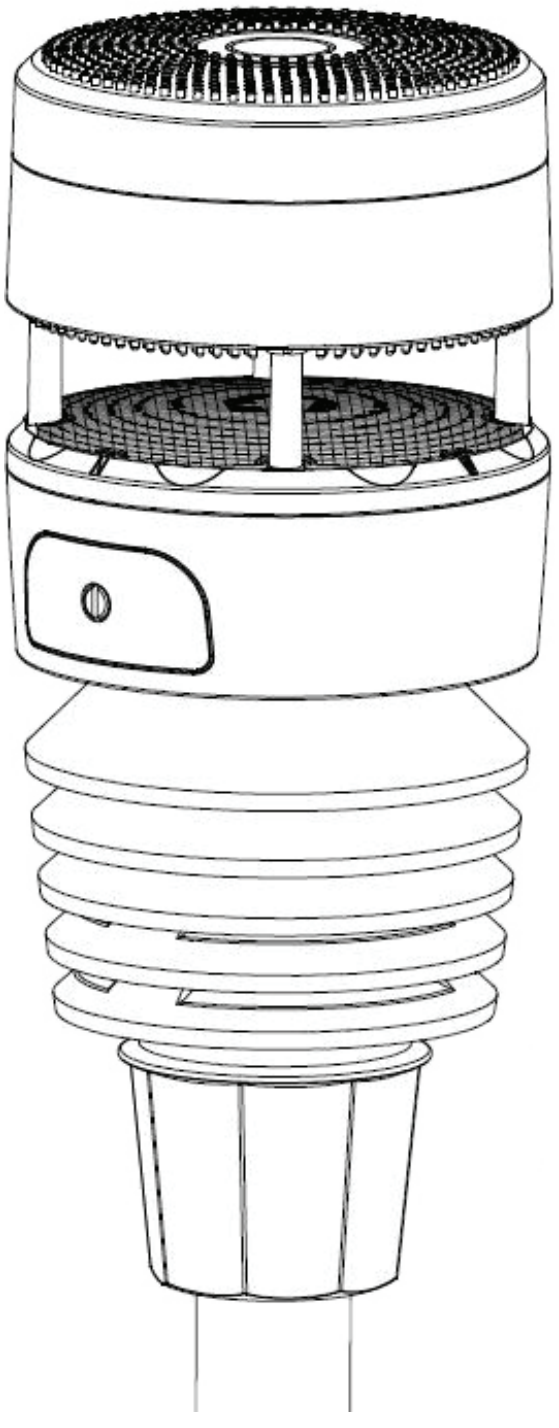

Package Contents:

- All-In-One Outdoor Weather Sensor Array
- Display Console with Desk Stand
- WH32B Temperature, Humidity and pressure sensor

Required Tools:

- Flat-Head Screwdriver
- (2) AA batteries

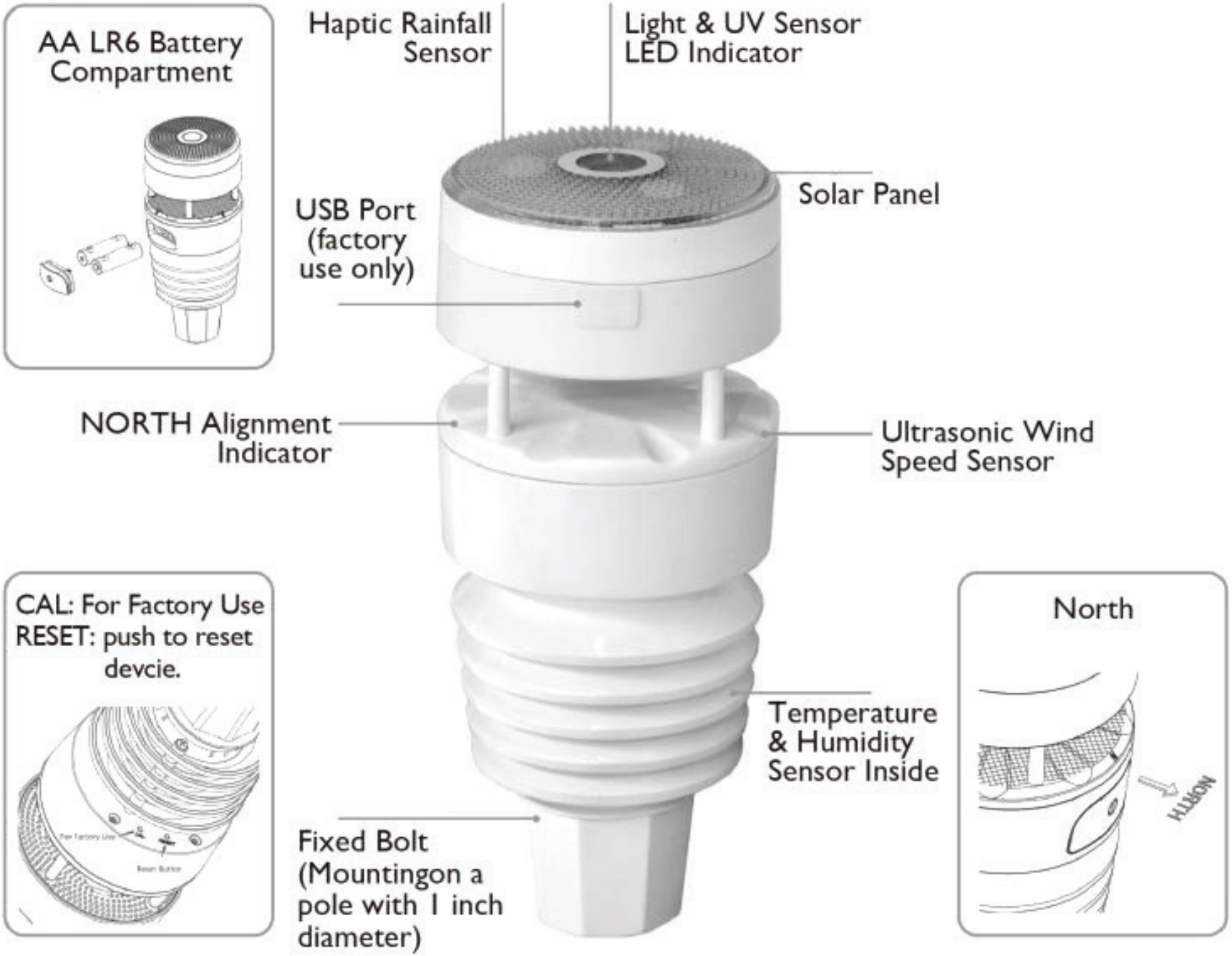

Note: *We recommend assembling the station indoors and moving it outside once the setup process is complete.*

Step 1:

Insert the 2 - AA batteries into the side of the array and close the battery door completely with flat-head screwdriver.

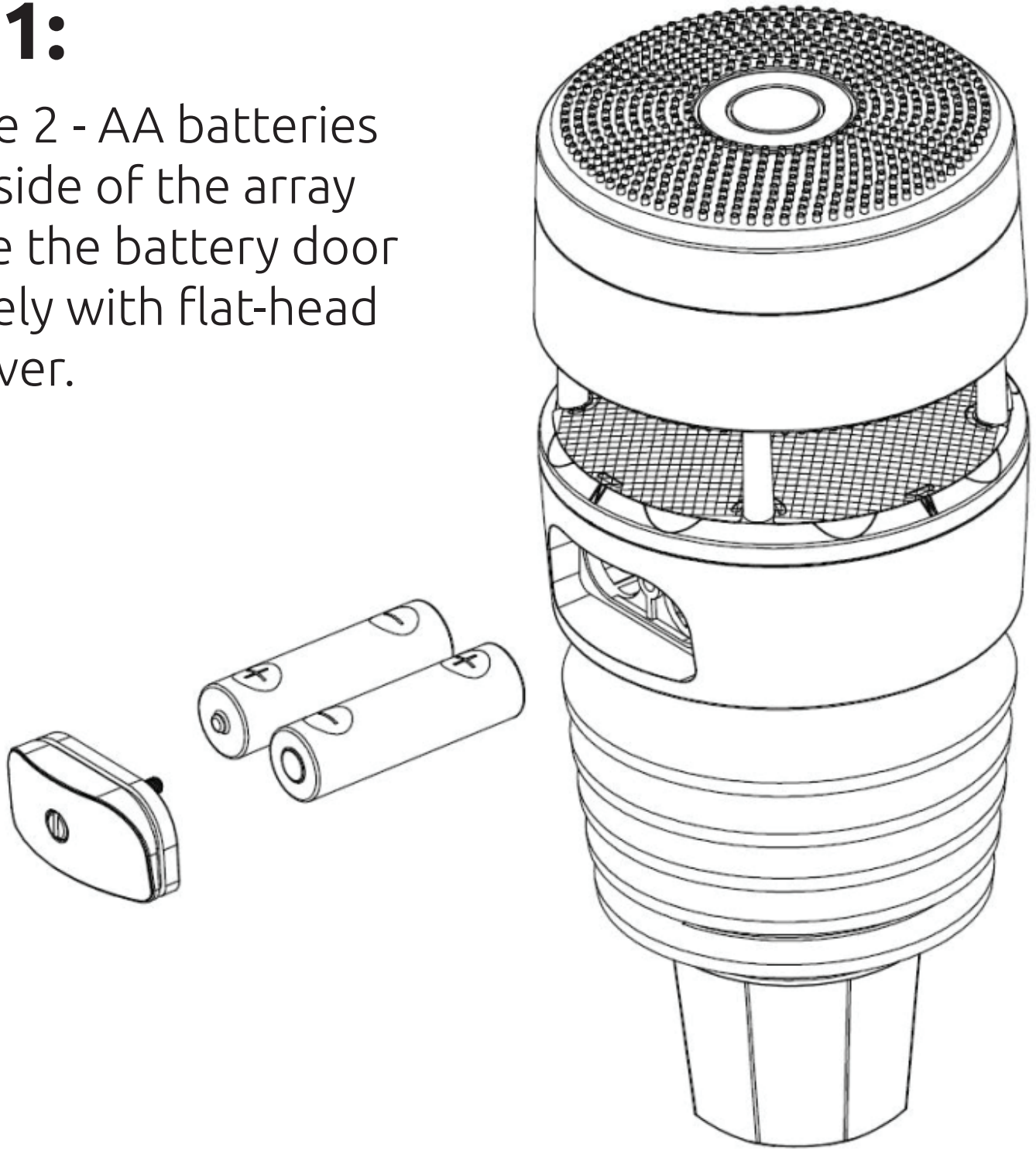

Step 2:

Power up the console using the AC adapter.

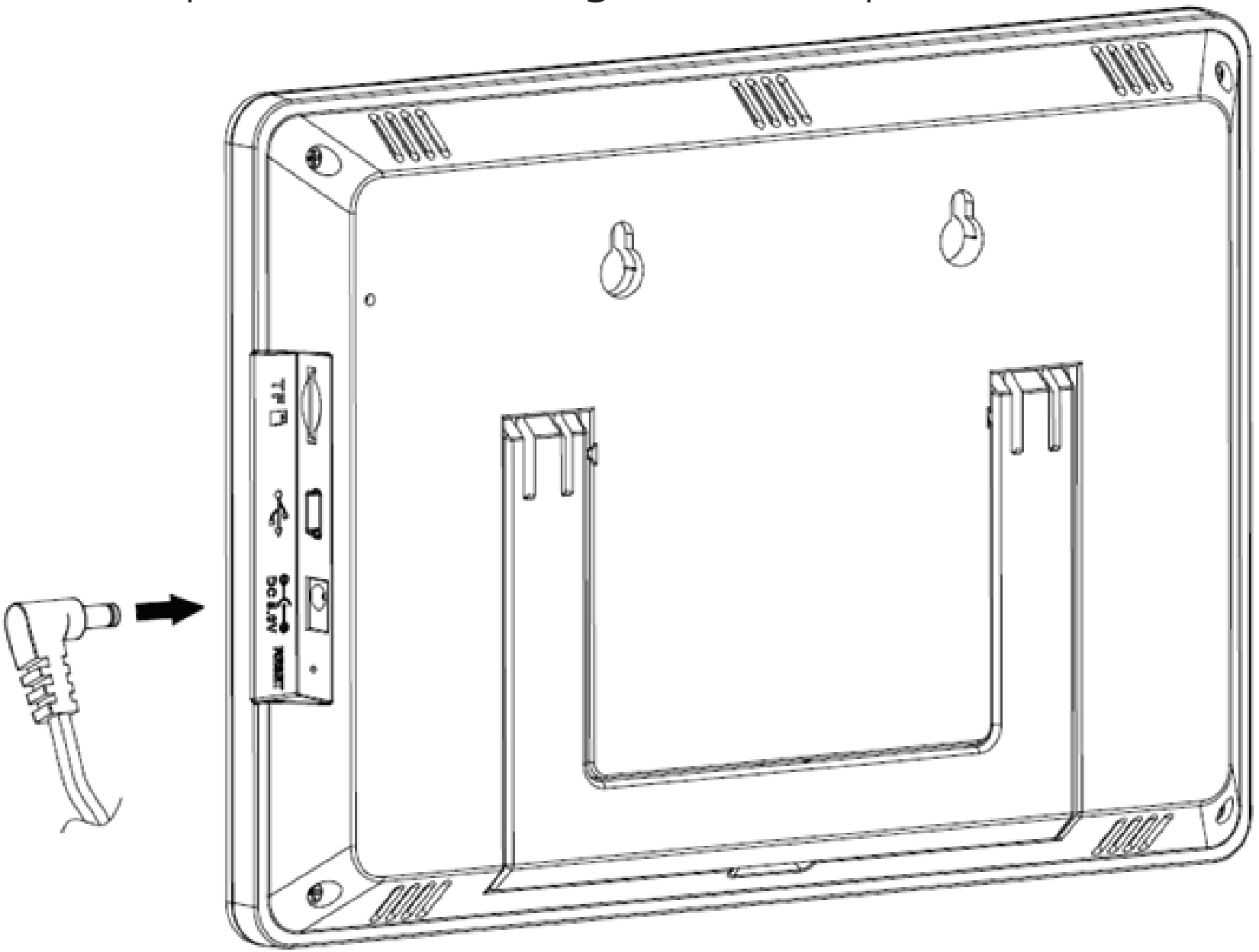

Step 3a:

WiFi Scan: Press the button corresponding to the gear icon.

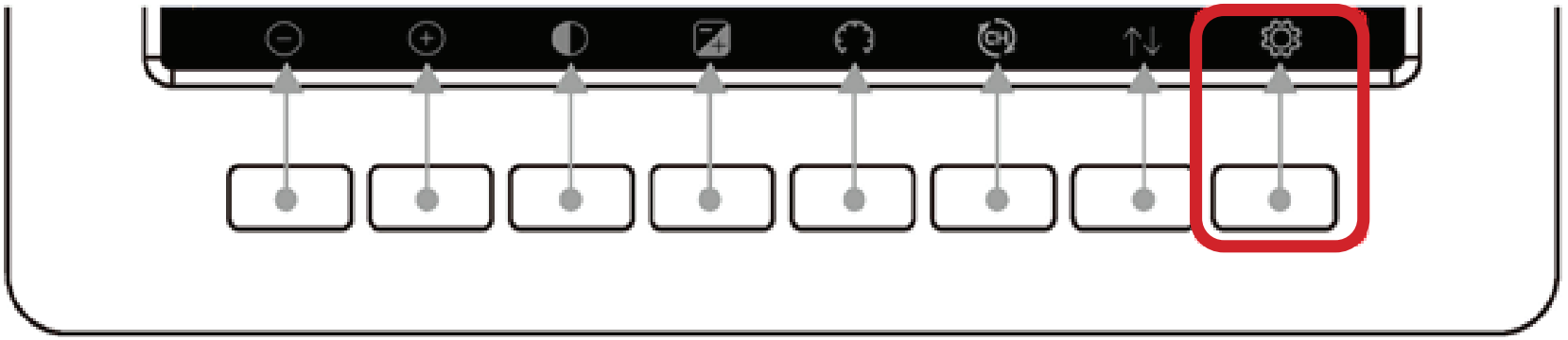

Then select **WiFi Scan—Setup** using the buttons corresponding to ↑ and 🔍 (which is like Enter on a computer).

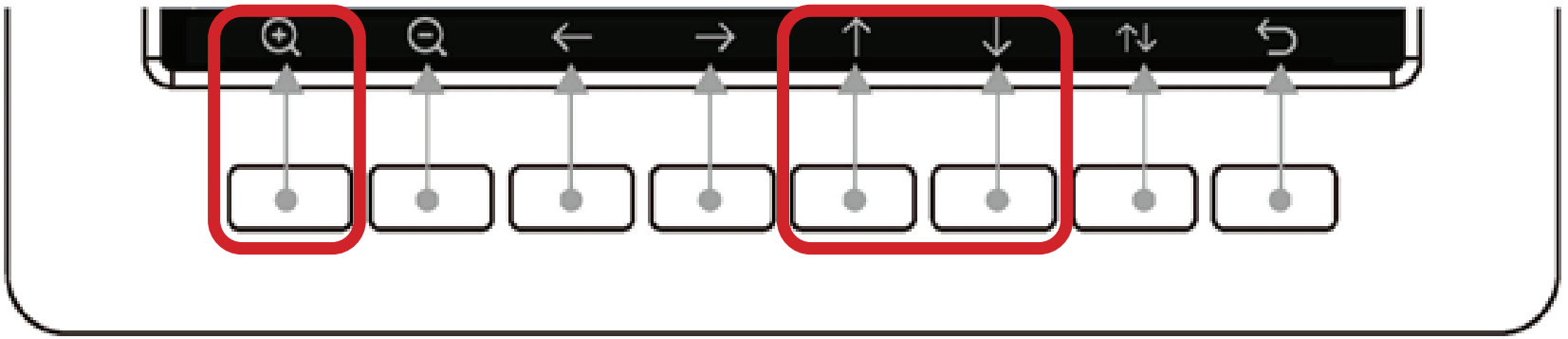

Navigate to your Wireless Network Name / SSID using ↑ ↓, press the select button ↵.

Step 3b:

Enter the password for your network and press “Ok” when done.

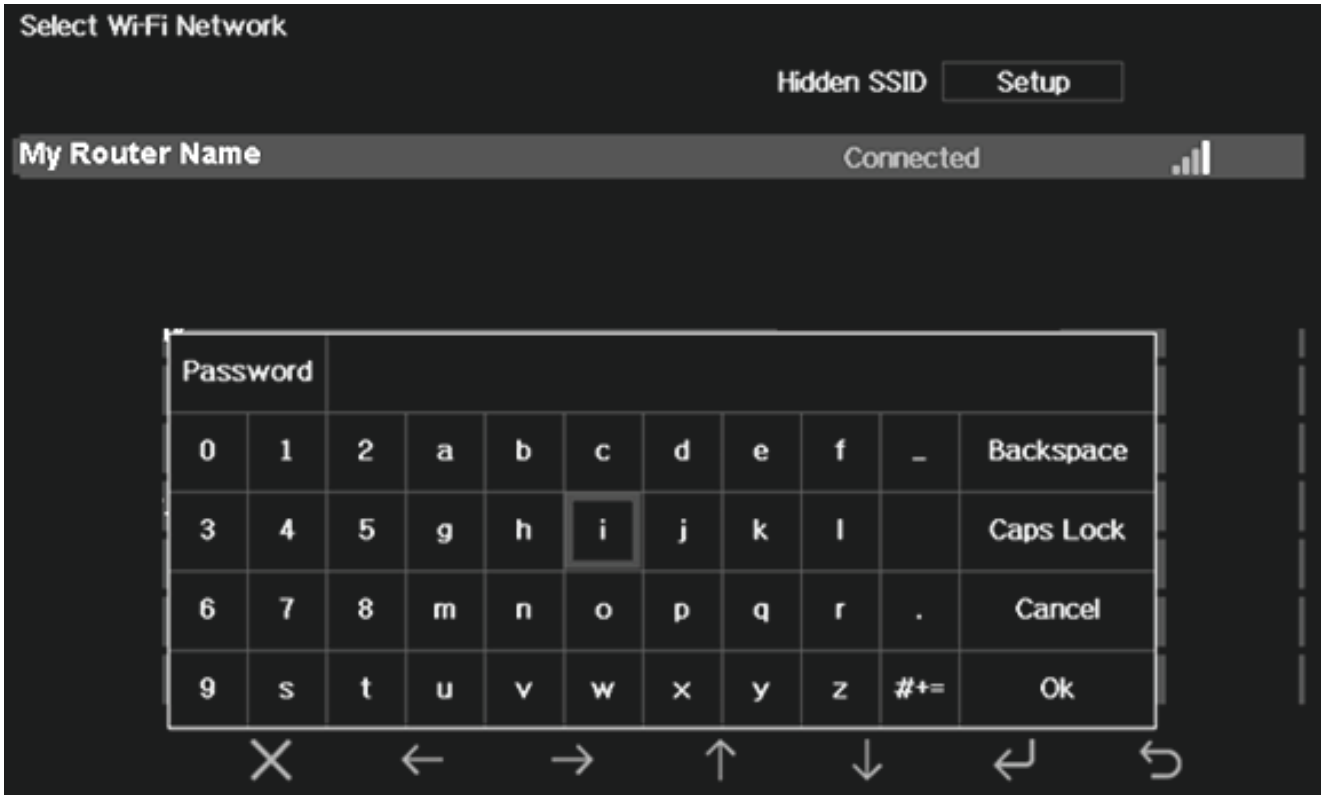

Within 3-5 minutes the WiFi Signal Strength and Ambient Weather Network Icons will appear.

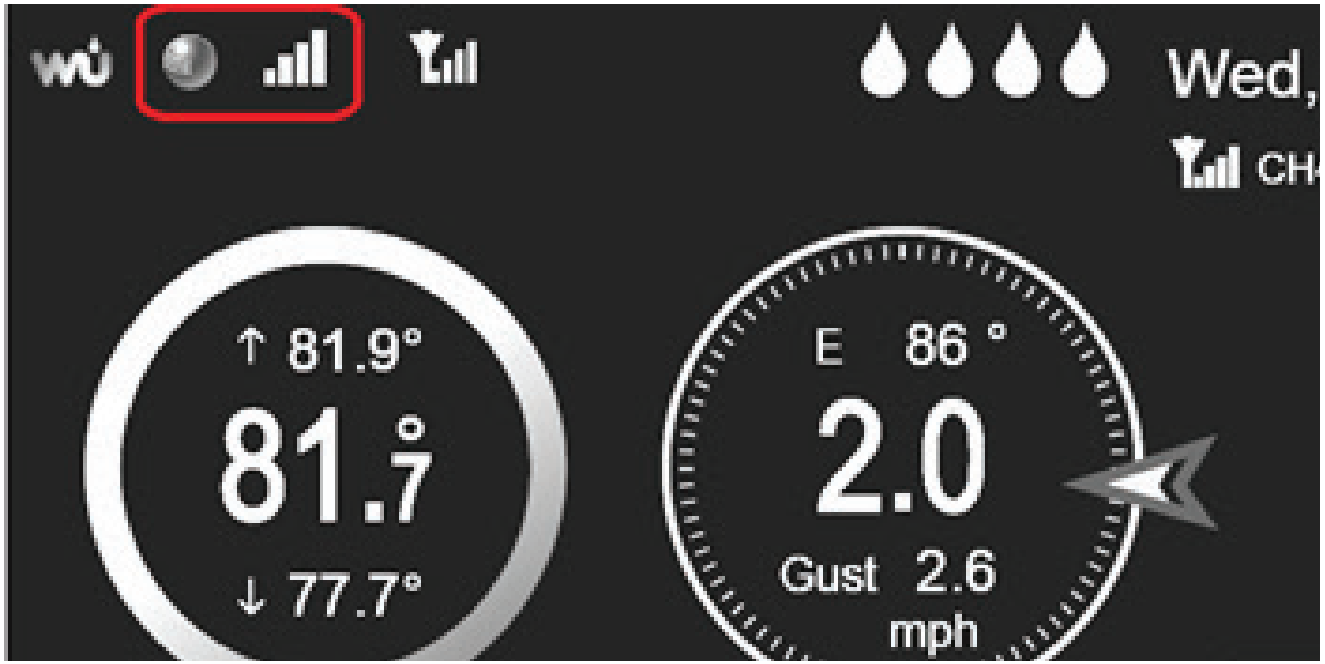

Step 4:

Press the button corresponding to the gear icon.

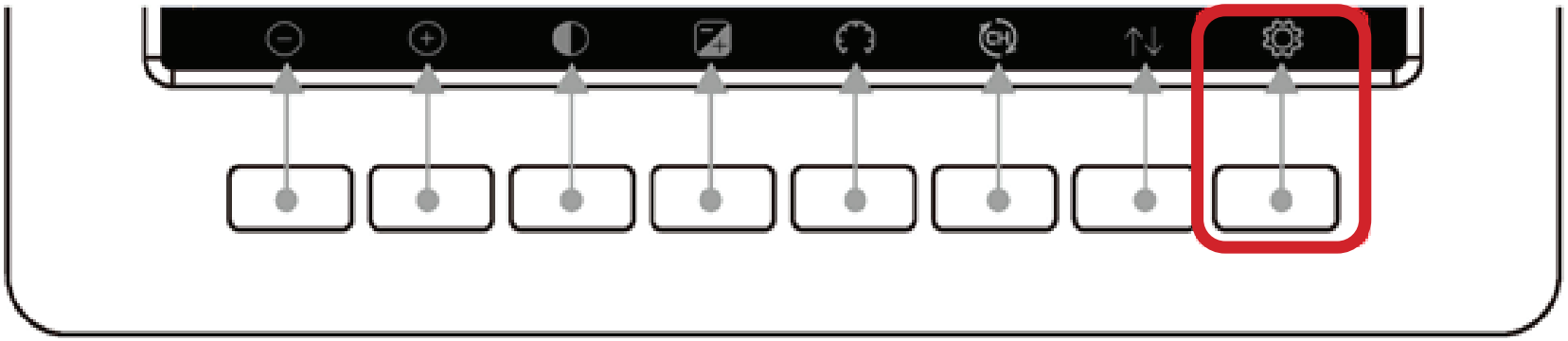

Then select Weather Server—Setup using the buttons corresponding to ↑ and (which is like Enter on a computer).

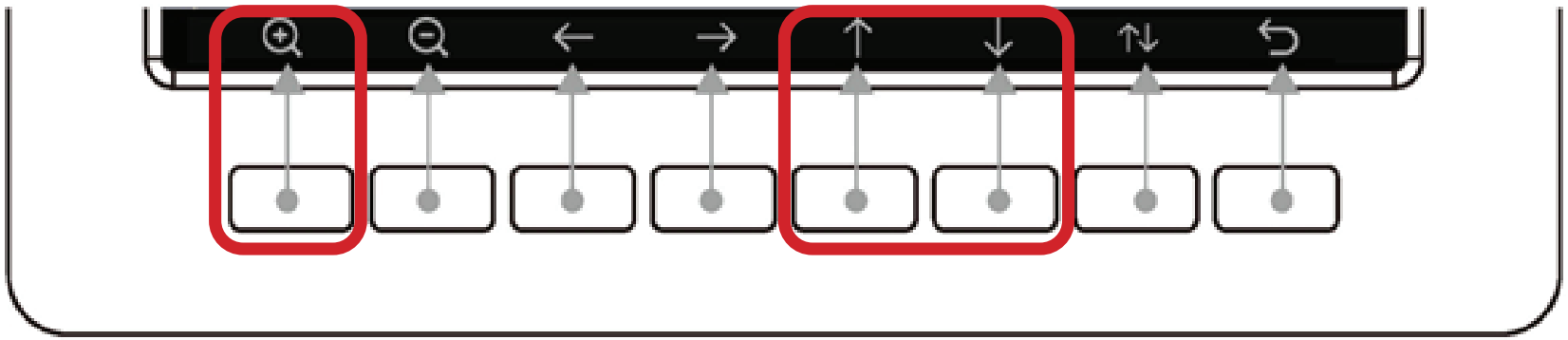

Step 4 (cont'd):

Press the ↓ to Account and Press 🔍. Then, enter the email you would like to use for this weather station on the Ambient Weather Network (if you already have an AWN account and want this station on the same account enter that email address here). When done press Ok.

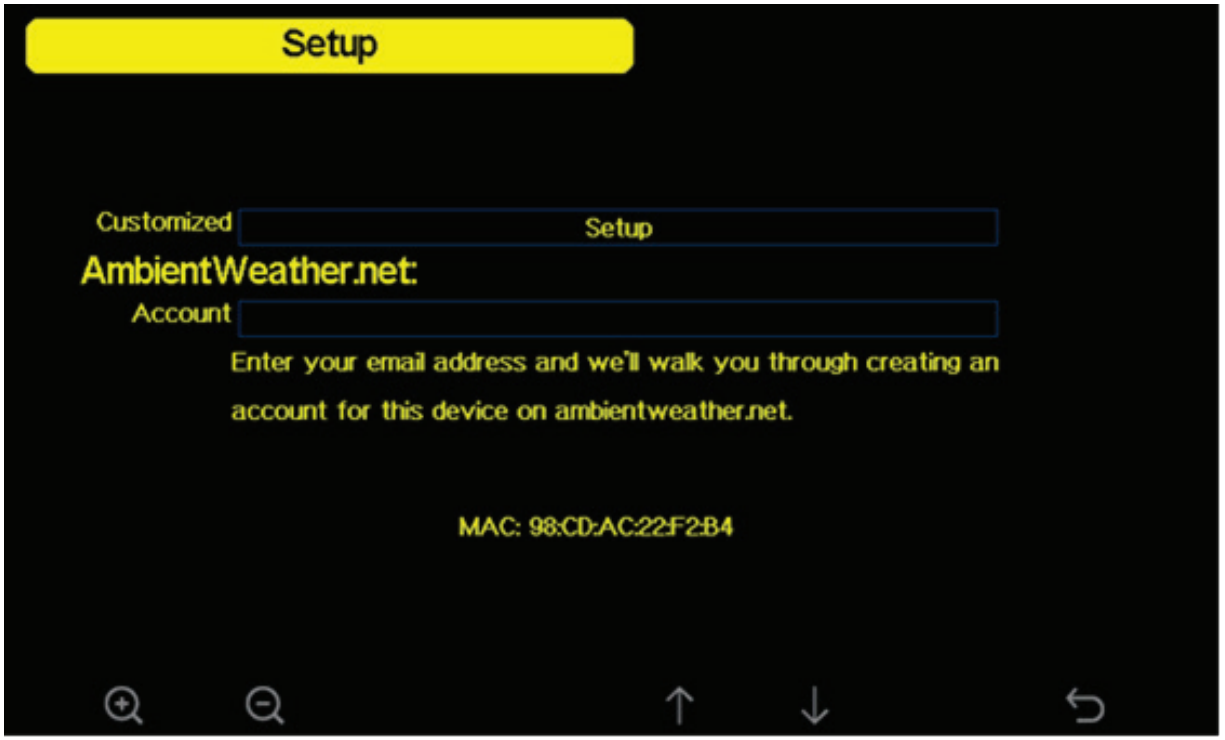

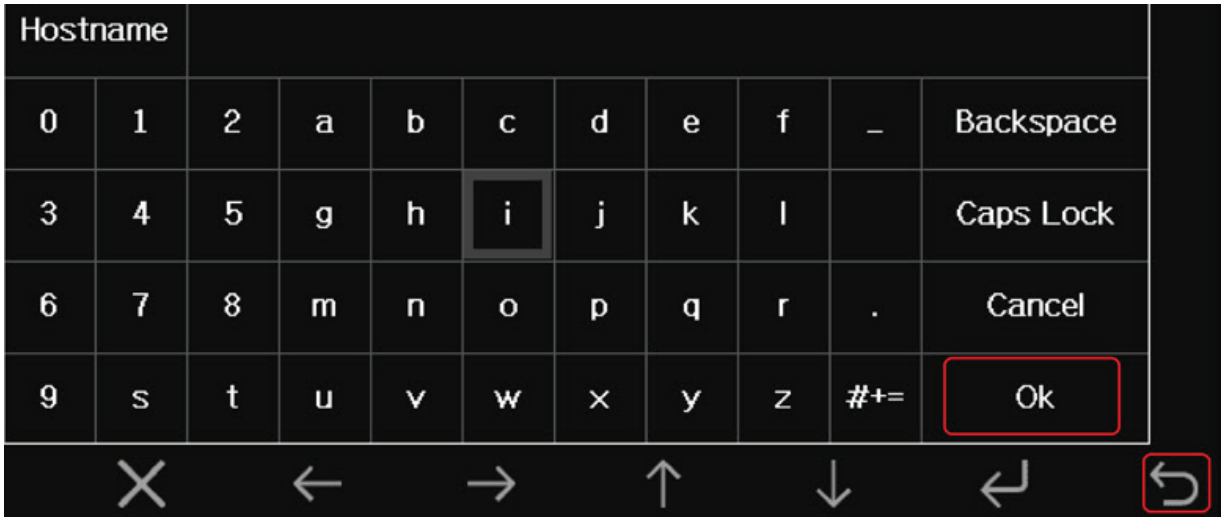

Step 5:

Check your email to confirm your dashboard setup on AmbientWeather.net. Your email will look something like this, depending on if this is your first account or if you already have an account with us.

Your Account and Device Are Connected

ambient weather®

Congratulations!

You already have an account on Ambientweather.net, and your device is connected.

Log in and view your dashboard, or download the Ambient Weather App for on-the-go access to your dashboard. Click here to download on the iOS App Store or Google Play Store.

Go to Dashboard

If the button does not work in your email client, try this URL:
https://ambientweather.net/dashboard

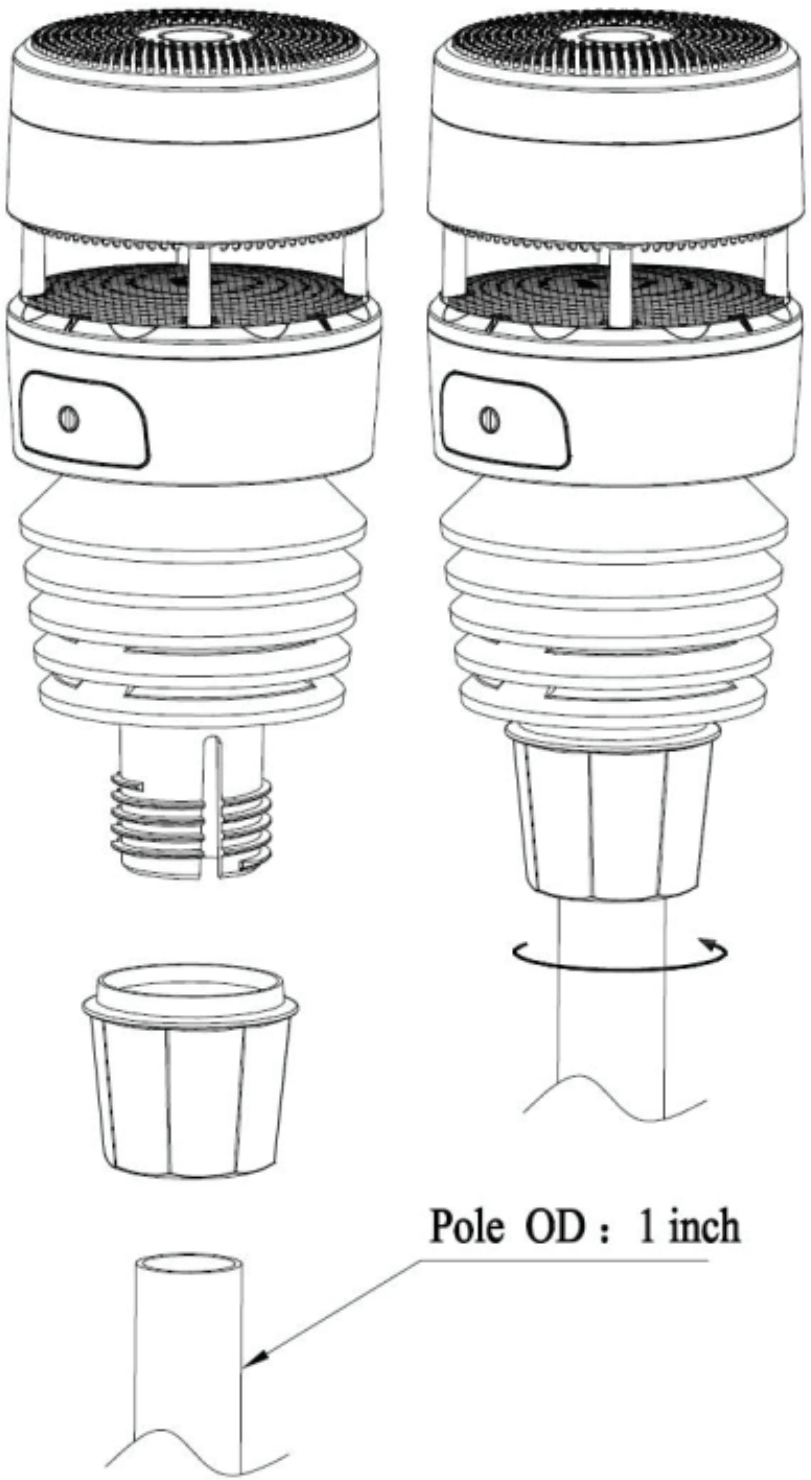

Step 6:

Install your array on a pole and tighten the octagonal tightening nut by hand. Please scan the QR code for mounting best practices.

Note: *Supports poles 1" OD.*

Welcome to the community!

Download the free Ambient Weather app for on-the-go access to your data, hyperlocal forecasts, interactive maps, and more! And join our facebook group and share a picture of your new station!

www.facebook.com/groups/ambientweathernetwork

WS-4000 Manual

ambient weather®

©Copyright 2024, Ambient LLC. All Rights Reserved.

WS-4000-QSG_0_24.06.13

FCC Caution:

Any changes or modifications not expressly approved by the party responsible for compliance could void the user's authority to operate this equipment.

This device complies with part 15 of the FCC Rules. Operation is subject to the following two conditions: (1) this device may not cause harmful interference, and (2) this device must accept any interference received, including interference that may cause undesired operation.
This device and its antenna(s) must not be co-located or operating in conjunction with any other antenna or transmitter.

NOTE: This equipment has been tested and found to comply with the limits for a Class B digital device, pursuant to Part 15 of the FCC Rules. These limits are designed to provide reasonable protection against harmful interference in a residential installation. This equipment generates, uses and can radiate radio frequency energy and, if not installed and used in accordance with the instructions, may cause harmful interference to radio communications. However, there is no guarantee that interference will not occur in a particular installation.
If this equipment does cause harmful interference to radio or television reception, which can be determined by turning the equipment off and on, the user is encouraged to try to correct the interference by one or more of the following measures:

If this equipment does cause harmful interference to radio or television reception,
which can be determined by turning the equipment off and on, the user is encouraged to try to correct the interference by one or more of the following measures:
-- Reorient or relocate the receiving antenna.
-- Increase the separation between the equipment and receiver.
-- Connect the equipment into an outlet on a circuit different
from that to which the receiver is connected.
-- Consult the dealer or an experienced radio/TV technician for help.
To maintain compliance with FCC's RF Exposure guidelines, This equipment should be installed and operated with minimum distance between 20cm the radiator your body: Use only the supplied antenna.