Mounting instructions

Torque flange

T40C1 (MPZ1006008 / MPZ1006009)

Table of contents

1 Safety instructions 1

2 Markings used 7

2.1 Symbols on the transducer 7

2.2 The markings used in this document 7

3 Application 8

4 Structure and mode of operation 9

5 Mechanical installation 11

5.1 Important precautions during installation 11

5.2 Conditions on site 12

5.3 Mounting position 12

5.4 Installation options 12

5.4.1 Installation without dismantling the antenna ring 13

5.4.2 Installation with subsequent stator mounting 14

5.5 Mounting the rotor 15

5.6 Mounting the stator 17

5.7 Speed measuring system (optional) 21

6 Electrical connection 23

6.1 General instructions 23

6.2 EMC protection 23

6.3 Connector pin assignment 25

6.4 Supply voltage 27

7 Shunt signal 28

8 Functionality testing 29

8.1 Rotor status, LED A (upper LED) 29

8.2 Stator status, LED B (lower LED) 30

9 Loading capacity 31

10 Maintenance 32

11 Waste disposal and environmental protection 32

12 Dimensions 33

12.1 Torque flange - 15kN·m 33

12.2 Torque flange - 25kN·m 33

13 Order numbers, accessories 35

14 Specifications 36

15 Supplementary technical information 40

1 Safety instructions

FCC Compliance & Advisory Statement for Option 7, Code U

Important

Any changes or modification not expressly approved in writing by the party responsible for compliance could void the user's authority to operate the device. Where specified additional components or accessories elsewhere defined to be used with the installation of the product, they must be used in order to ensure compliance with FCC regulations.

This device complies with Part 15 of the FCC Rules. Operation is subject to the following two conditions: (1) this device may not cause harmful interference, and (2) this device must accept any interference received, including interference that may cause undesired operation. The FCC identifier or the unique identifier, as appropriate, must be displayed on the device.

Model	Measuring range	FCC ID
T40C1 - MPZ1006008	15 kN·m	**2ADAT-T40C1**
T40C1 - MPZ1006009	25 kN·m	**2ADAT-T40C1**

Label example with FCC ID and IC number

FCC ID: 2ADAT-T40C1

Position

Fig. 1.1 Location of the label on the stator of the device

FCC ID: 2ADAT-T40C1
This device complies with part 15 of the FCC Rules.
Operation is subject to the following two conditions:
(1) This device may not cause harmful interference, and
(2) this device must accept any interference received,
including interference that may cause undesired operation.

Fig. 1.2 Example of the label

Industry Canada for Option 7, Code U

Darmstadt, 2014-11-13

This product has not yet received IC (Industry Canada) approval. The certification process for this product is still under way. HBM currently expects that IC approval will be granted by the end of December 2014.

Your local HBM contact looks forward to answer any questions you may have regarding IC approval.

Darmstadt, le 13 novembre 2014

Ce produit n'a pas encore obtenu l'approbation IC (Industrie Canada). Le produit est encore en processus de certification. Actuellement, HBM suppose que l'approbation IC sera accordee jusqu'a fin decembre 2014. Si vous avez des questions au sujet de l'approbation IC, veuillez vous adresser a votre representation HBM sur place.

This device complies with Industry Canada standard RSS210.

This device complies with Industry Canada license−exempt RSS standard(s).Operation is subject to the following two conditions: (1) this device may not cause interference, and (2) this device must accept any interference, including interference that may cause undesired operation of the device.

Cet appareil est conforme aux norme RSS210 d’Industrie Canada.

Cet appareil est conforme aux normes d’exemption de licence RSS d’Industry Canada. Son fonctionnement est soumis aux deux conditions suivantes : (1)cet appareil ne doit pas causer d’interference et (2) cet appareil doit accepter toute interference, notamment les interferences qui peuvent affecter son fonctionnement.

Intended use

The torque flange is used exclusively for torque, angle of rotation and power measurement tasks within the load limits stipulated in the specifications. Any other use is not the designated use.

Stator operation is only permitted when the rotor is installed.

The torque flange may only be installed by qualified personnel in compliance with the specifications and with the safety requirements and regulations of these mounting instructions. It is also essential to observe the applicable legal and safety regulations for the application concerned. The same applies to the use of accessories.

The torque flange is not intended for use as a safety component. Please also refer to the section "Additional safety precautions". Proper and safe operation requires proper transportation, correct storage, siting and mounting, and careful operation.

Loading capacity limits

The data in the technical data sheets must be complied with when using the torque flange. In particular, the respective maximum loads specified must never be exceeded. The following limits set out in the specifications must not be exceeded, e.g.:

- Limit torque
- Longitudinal limit force, lateral limit force or bending limit moment
- Torque vibration bandwidth
- Breaking torque
- Temperature limits
- Limits of electrical loading capacity

Use as a machine element

The torque flange can be used as a machine element. When used in this manner, it must be noted that, to favor greater sensitivity, the transducer is not designed with the safety factors usual in mechanical engineering. Please refer here to the section "Loading capacity limits", and to the specifications.

Accident prevention

According to the prevailing accident prevention regulations, once the transducers have been mounted, a covering agent or cladding has to be fitted as follows:

- The covering agent or cladding must not be free to rotate.
- The covering agent or cladding should prevent squeezing or shearing and provide protection against parts that might come loose.
- Covers and cladding must be positioned at a suitable distance or be so arranged that there is no access to any moving parts within.
- Covering agents and cladding must still be attached even if the moving parts of the torque flange are installed outside peoples' movement and working range.

The only permitted exceptions to the above requirements are if the torque flange is already fully protected by the design of the machine or by existing safety precautions.

Additional safety precautions

The torque flange cannot (as a passive transducer) implement any (safety-relevant) cutoffs. This requires additional components and constructive measures for which the installer and operator of the plant is responsible. The layout of the electronics conditioning the measurement signal should be such that measurement signal failure does not cause damage.

The scope of supply and performance of the transducer covers only a small area of torque measurement technology. In addition, equipment planners, installers and operators should plan, implement and respond to safety engineering considerations in such a way as to minimize residual dangers. Pertinent national and local regulations must be complied with.

General dangers of failing to follow the safety instructions

The torque flange is state of the art and reliable. Transducers can give rise to residual dangers if they are incorrectly operated or inappropriately mounted, installed and operated by untrained personnel. Every person involved with siting, starting-up, operating or repairing a torque flange must have read and understood the mounting instructions and in particular the technical safety instructions. The transducers can be damaged or destroyed by non-designated use of the transducer or by non-compliance with the mounting and operating instructions, these safety instructions or any other applicable safety regulations (BG safety and accident prevention regulations) when using the transducers. Transducers can break, particularly in the case of overloading. The breakage of a transducer can also cause damage to property or injury to persons in the vicinity of the transducer.

If the torque flange is not used according to the designated use, or if the safety instructions or specifications in the mounting and operating instructions are ignored, it is also possible that the transducer may fail or malfunction, with the result that persons or property may be affected (due to the torques acting on or being monitored by the torque flange).

Conversions and modifications

The transducer must not be modified from the design or safety engineering point of view except with our express agreement. Any modification shall exclude all liability on our part for any damage resulting therefrom.

Selling on

If the torque flange is sold on, these mounting instructions must be included

with the torque flange.

Qualified personnel

Qualified personnel means persons entrusted with siting, mounting, starting up and operating the product, who possess the appropriate qualifications for their function.

This includes people who meet at least one of the three following requirements:

- Knowledge of the safety concepts of automation technology is a requirement and as project personnel, you must be familiar with these concepts.
- As automation plant operating personnel, you have been instructed how to handle the machinery. You are familiar with the operation of the equipment and technologies described in this documentation.
- As commissioning engineers or service engineers, you have successfully completed the training to qualify you to repair the automation systems. You are also authorized to activate, ground and label circuits and equipment in accordance with safety engineering standards.

2 Markings used

2.1 Symbols on the transducer

Meaning: Read and note the data in this manual

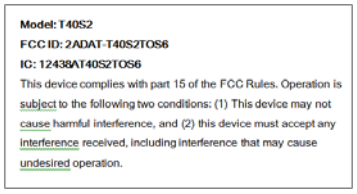

Label example

Label example with FCC ID and IC number, Option 7 Code U.

Location of the label on the stator device.

2.2 The markings used in this document

Important instructions for your safety are specifically identified. It is essential to follow these instructions in order to prevent accidents and damage to property.

Symbol	Meaning
⚠ WARNUNG	This marking warns of a potentially dangerous situation in which failure to comply with safety requirements could result in death or serious physical injury.
⚠ CAUTION	This marking warns of a potentially dangerous situation in which failure to comply with safety requirements can result in slight or moderate physical injury.
NOTE	This marking draws your attention to a situation in which failure to comply with safety requirements could lead to damage to property.
i **Important**	This marking draws your attention to information about the product or about handling the product.
i **Tip**	This marking indicates application tips or other information that is useful to you.

Symbol	Meaning
	This marking draws your attention to information about the product or about handling the product.
Emphasis	Italics are used to emphasize and highlight texts.

3 Application

The torque flange measures static and dynamic torques on stationary and rotating shafts. Test beds can be extremely compact because of the short construction of the transducer. This offers a very wide range of applications.
The torque flange is reliably protected against electromagnetic interference. It has been constructed according to the relevant European standards (e.g. EMC behavior) and/or complies with US and Canadian standards. The product carries the FCC label.

This transducer is solely designed and may only be used for the following system types:

- MTU Marine test benches according to Request MPZ1006008 / MPZ1006009

4 Structure and mode of operation

The torque flange consists of two separate parts: the rotor and the stator. The rotor comprises the measuring body and the signal transmission elements.

Strain gauges (SGs) are installed on the measuring body. The rotor electronics for transmitting the bridge excitation voltage and the measurement signal are located centrally in the flange. The transmitter coils for contactless transmission of excitation voltage and measurement signal are located on the measuring body's outer circumference. The signals are sent and received by a separable antenna ring. The antenna ring is mounted on a housing that includes the electronic system for voltage adaptation and signal conditioning.

Connectors for the torque and speed signals, the voltage supply and the digital output are located on the stator. The antenna segments (ring) should be mounted more or less concentrically around the rotor (see Chapter 5).

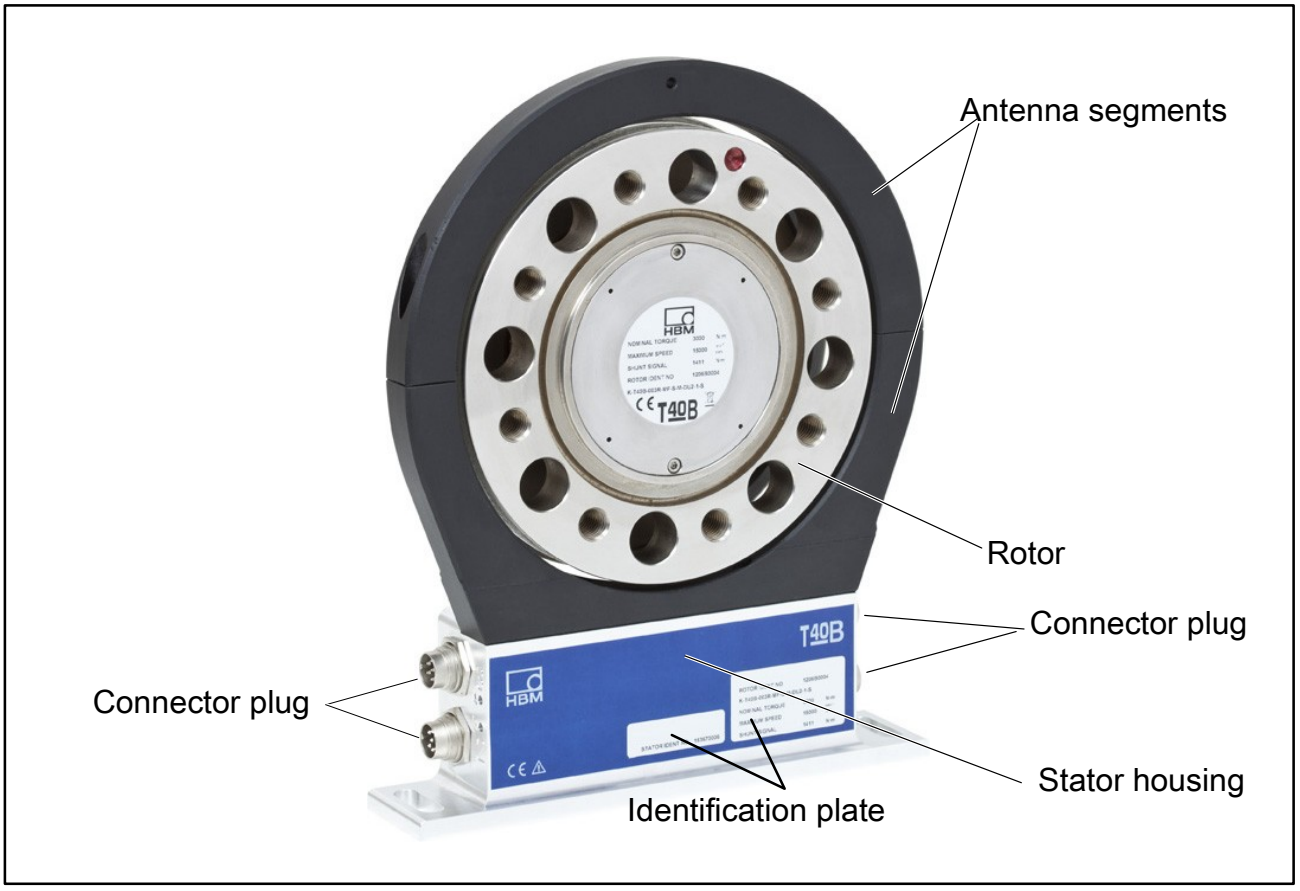

Fig. 4.1: Possible mechanical construction without speed measuring system

The speed sensor can be optionally mounted on the stator. The speed is measured magnetically with an AMR sensor and a magnetic ring. The magnetic ring for measurement of speed is welded to the flange.

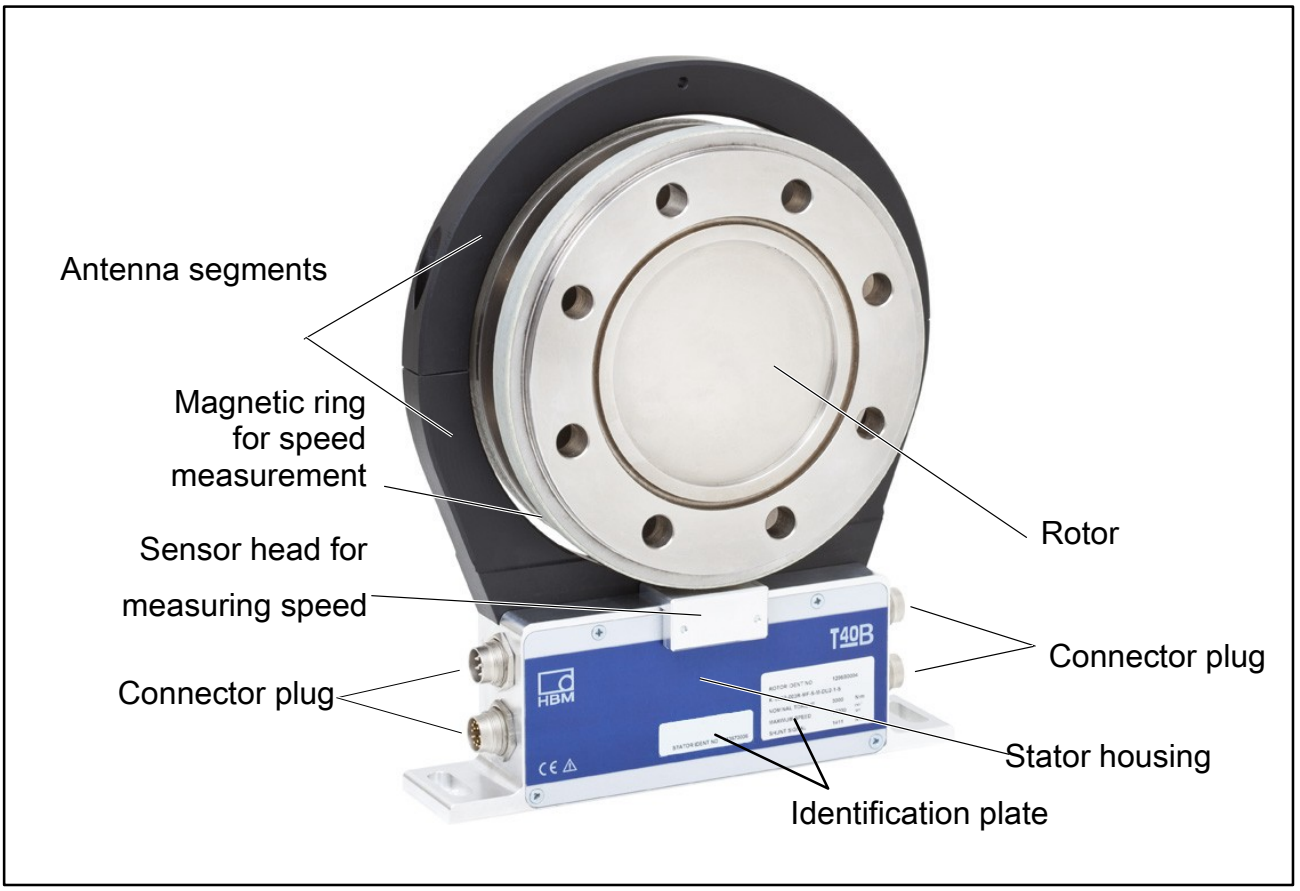

Fig. 4.2: Mechanical construction with a speed measuring system

5 Mechanical installation

5.1 Important precautions during installation

NOTE

A torque flange is a precision measurement element and therefore needs careful handling. Dropping or knocking the transducer may cause permanent damage. Make sure that the transducer cannot be overloaded, even while it is being mounted.

- Handle the transducer with care.
- Check the effect of bending moments, critical speeds and natural torsional oscillations, to prevent the transducer being overloaded by increases in resonance.
- Make sure that the transducer cannot be overloaded.

⚠ WARNING

There is a danger of the transducer breaking if it is overloaded. This can cause danger for the operating personnel of the system in which the transducer is installed.

Implement appropriate safety measures to avoid overloads and to protect against resulting dangers.

- Use a screw locking device (medium strength, e.g. LOCTITE No. 242) to glue the screws into the counter thread to exclude pre-stressing loss due to screw slackening, if alternating loads are to be expected.
- Comply with the mounting dimensions to enable correct operation.

An appropriate shaft flange enables the torque flange to be mounted directly. It is also possible to mount a joint shaft or relevant compensating element directly on the rotor (using an intermediate flange when required). Under no circumstances should the permissible limits specified for bending moments, lateral and longitudinal forces be exceeded. Due to the torque flange's high torsional stiffness, dynamic shaft train changes are kept to a minimum.

Important

Even if the unit is installed correctly, the zero point adjustment made at the factory can shift by up to approx. 2% of the sensitivity. If this value is exceeded, we advise you to check the mounting conditions. If the residual zero offset when the unit is removed is greater than 1% of the sensitivity, please send the transducer back to the Darmstadt factory for testing.

5.2 Conditions on site

The torque flange must be protected against coarse dirt particles, dust, oil, solvents and humidity.

There is wide ranging compensation for the effects of temperature on the output and zero signals of the transducer (see Chapter "Specifications"). If there are no static temperature ratios, for example, because of the temperature differences between the measuring body and the flange, the values given in the specifications can be exceeded. In this case, ensure static temperature ratios by cooling or heating, depending on the application. As an alternative, check if thermal decoupling is possible, e.g. by means of heat radiating elements such as multiple disc couplings.

5.3 Mounting position

The torque flange can be mounted in any position.

With clockwise torque, the output frequency is, depending on the option, 60 - 90 kHz, 10 - 15 kHz or 240 - 360 kHz). With HBM amplifiers or with the voltage output option, a positive output signal (0 V -+10 V) is present. In the case of the speed measuring system, an arrow must be attached to the stator housing to clearly define the direction of rotation: If the measurement flange moves in the direction of the arrow, connected HBM measuring amplifiers deliver a positive output signal.

5.4 Installation options

In principle, there are two possibilities for torque flange mounting: with the antenna ring complete or dismantled. We recommend mounting as described in Chapter 5.4.1. If mounting in accordance with Chapter 5.4.1 is not possible, (e.g. in the case of subsequent stator replacement), you will have to dismantle the antenna ring. It is essential in this case to comply with the notes on assembling the antenna segments (see Chapter 5.4.2).

5.4.1 Installation without dismantling the antenna ring

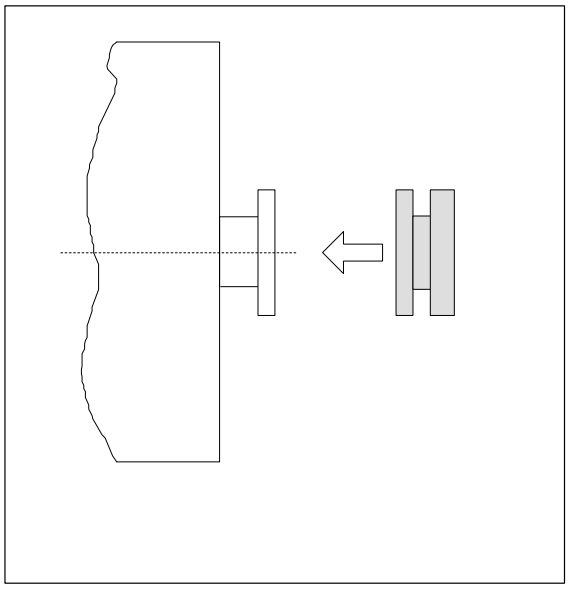

1. Mount rotor

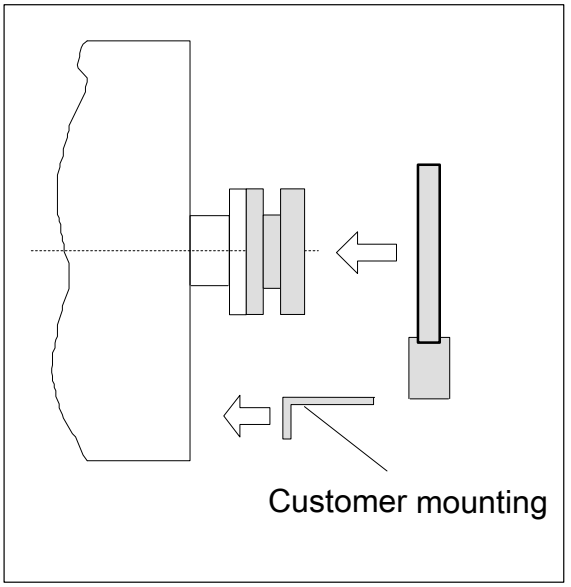

2. Install stator

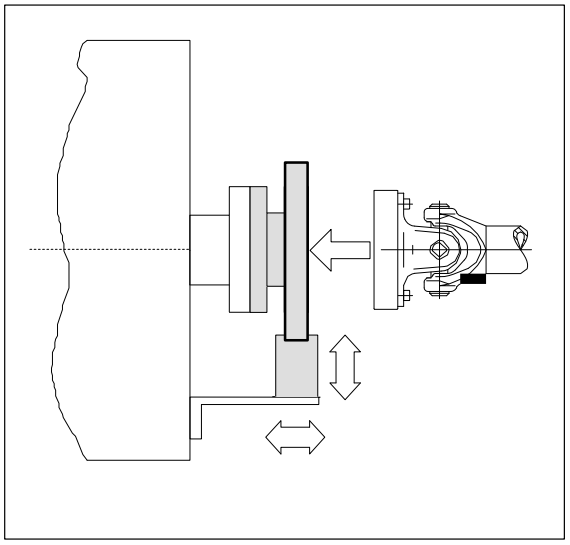

3. Finish installation of shaft run

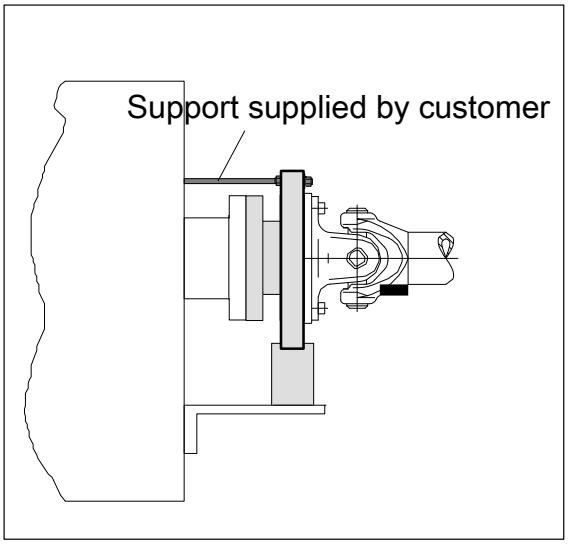

4. Mount support

5.4.2 Installation with subsequent stator mounting

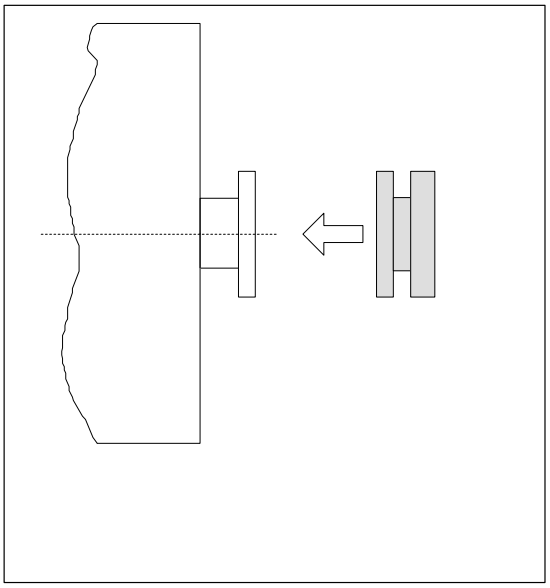

1. Install rotor

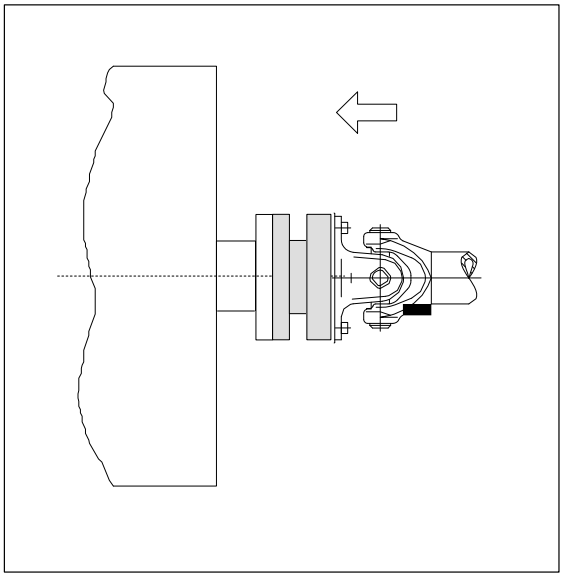

2. Install shaft train

3. Dismantle antenna segment

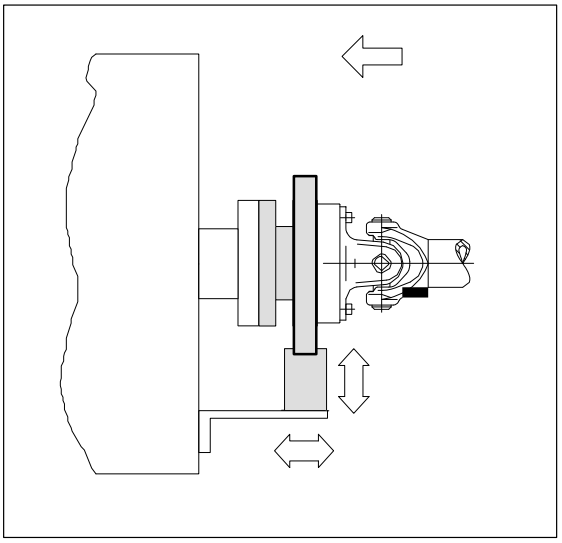

4. Install antenna segment

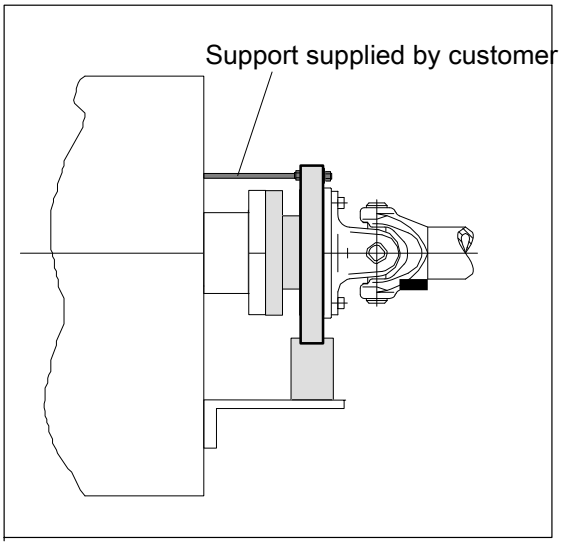

4. Mount support

5.5 Mounting the rotor

Tip

Usually the rotor identification plate is no longer visible after installation. This is why we include with the rotor additional stickers with the important ratings, which you can attach to the stator or any other relevant test-bench components. You can then refer to them whenever there is anything you wish to know, such as the shunt signal.

1. Prior to installation, clean the plane surfaces of the transducer flange and the counter flange.

   For safe torque transfer, the surfaces must be clean and free from grease. Use a piece of cloth or paper soaked in solvent. When cleaning, make sure that you do not damage the transmitter winding or the speed measuring system.

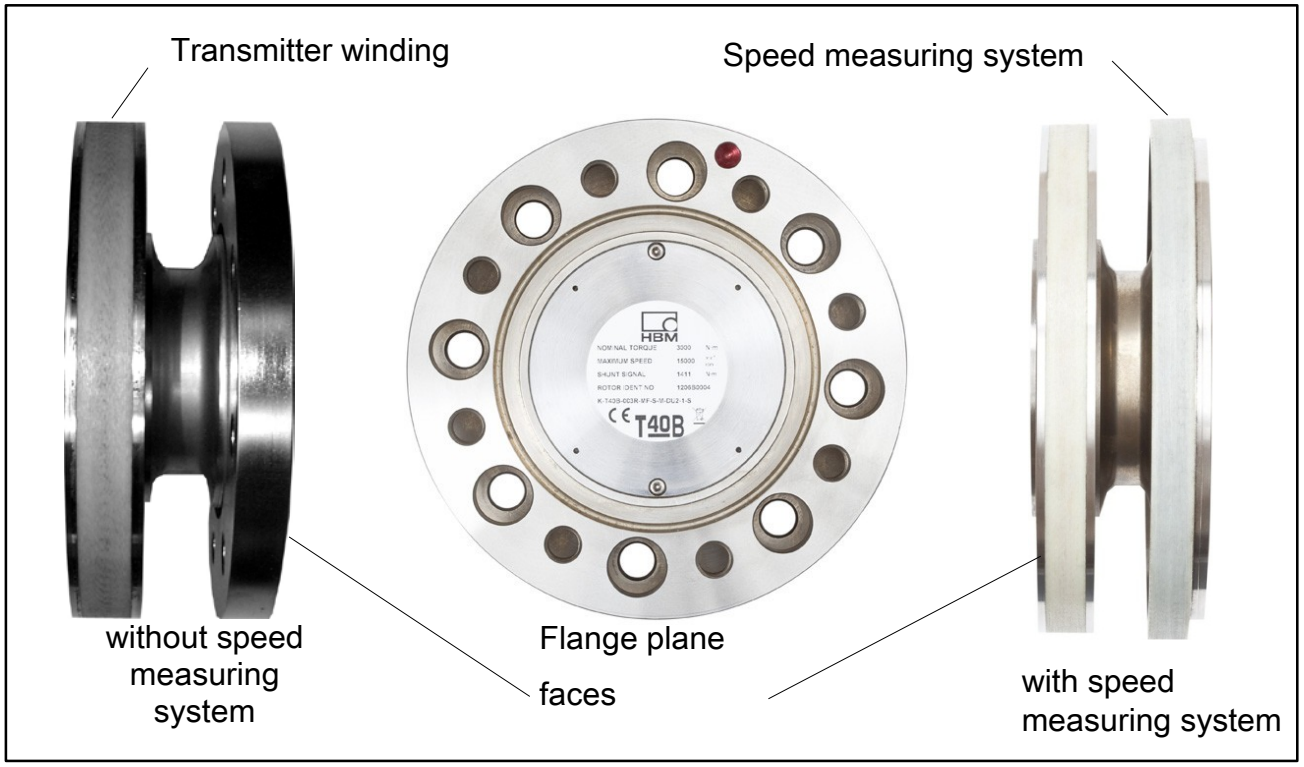

Fig. 5.9: Bolted rotor connection

2. For the bolted rotor connection (see Fig. 5.9), use DIN EN ISO 4762 hexagon socket screws of the property class stated in Table 4.1, in a suitable length (dependent on the connection geometry, see Table 5.1 on Page 17).

   We recommend DIN EN ISO 4762 fillister head screws, blackened, smooth-headed, permitted size and shape variance in accordance with DIN ISO 4759, Part 1, product class A.

Important

Use a screw locking device (medium strength, e.g. LOCTITE No. 242) to glue the screws into the counter thread to exclude pre-stressing loss due to screw slackening, if alternating loads are to be expected.

3. Fasten all screws with the specified torque

   (Table 5.1 on Page 17).
4. There are tapped holes on the rotor for further mounting. Also use screws of property class 10.9 or 12.9, and fasten with the torque specified in Table 5.1.

Important

Use a screw locking device (medium strength, e.g. LOCTITE No. 242) to glue the screws into the counter thread to exclude pre-stressing loss due to screw slackening, if alternating loads are to be expected.

Measuring range	Fastening screws		Prescribed tightening moment
kN·m	Z [1)]	Property class	N·m
15	M16	12.9	325
	M20	12.9	397
25	M20	129	397
	M24	12.9	245

Table 5.1: Fastening screws

1) DIN EN ISO 4762; black/oiled/..$_{tot.}$=0.125

5.6 Mounting the stator

On delivery, the stator has already been installed and is ready for operation. The upper antenna segment can be separated from the stator, for example, for maintenance or to facilitate stator mounting.

If your application does not require the stator to be dismantled, proceed as described in points 2., 5., and 6.

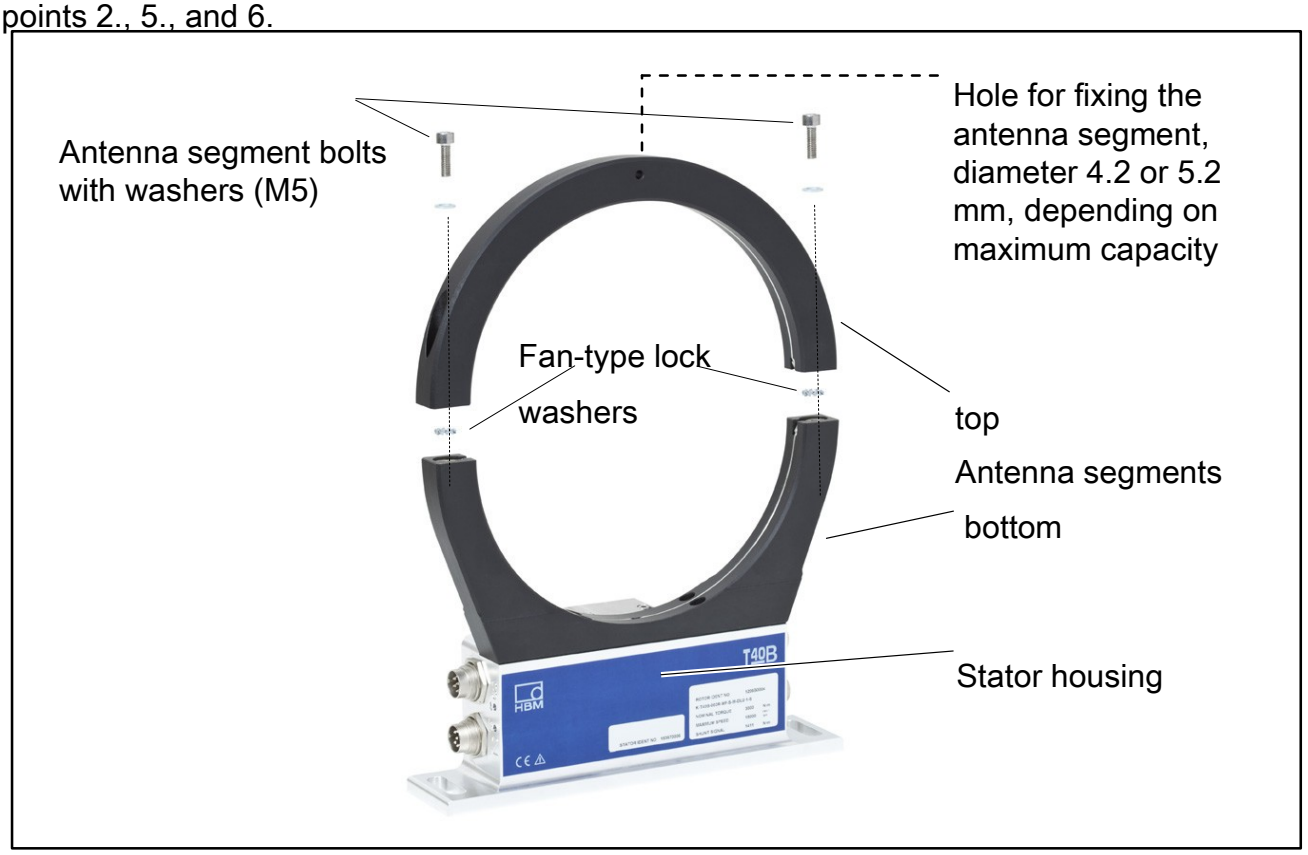

Fig. 5.10: Bolted connection of the antenna segments on the stator

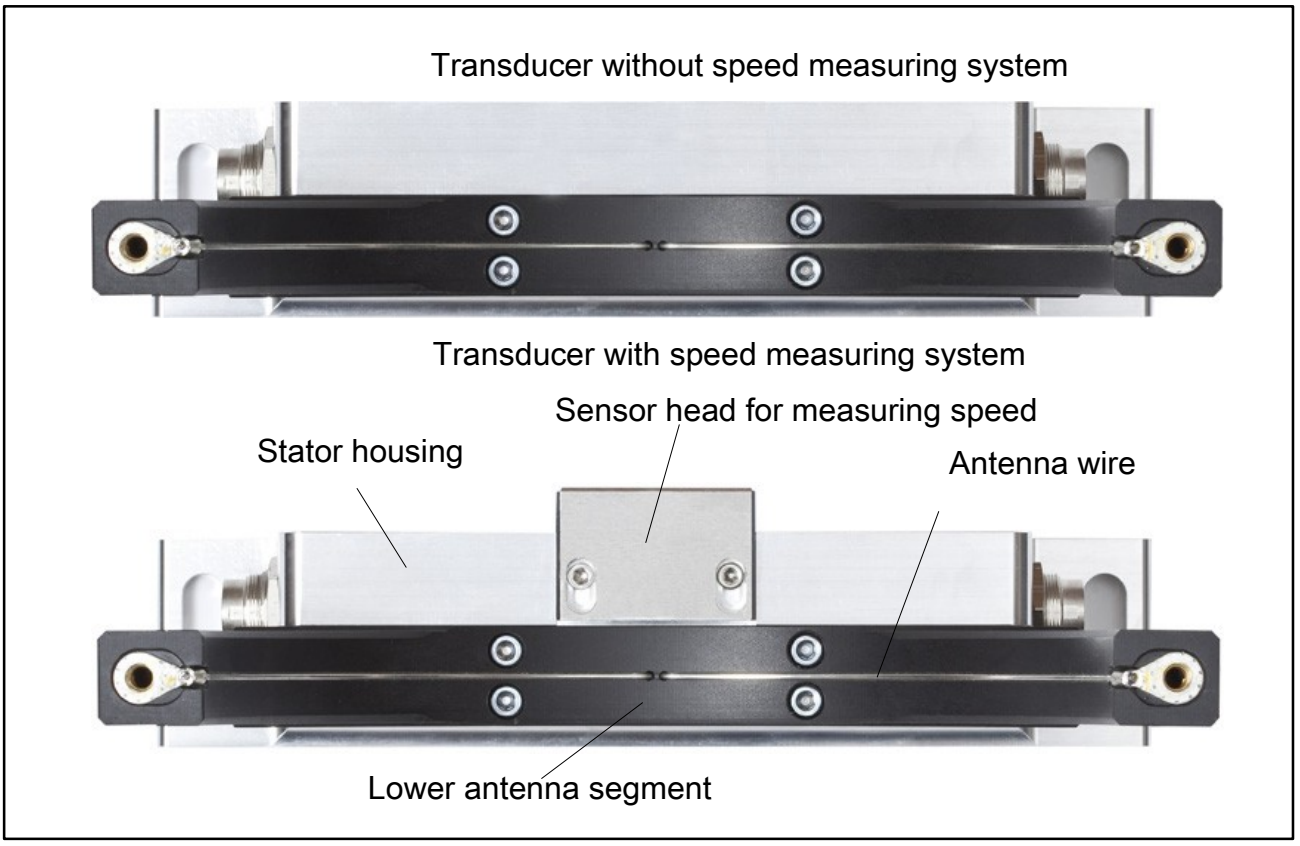

Fig. 5.11: Stator housing and lower antenna segment with antenna wire

1. Undo and remove the bolted connections (M5) on the upper antenna segment.
   There are fan type lock washers between the antenna segments: Make sure that they do not get lost.
2. Use an appropriate base plate to install the stator housing in the shaft train so that there is sufficient opportunity for horizontal and vertical adjustments. Do not fully tighten the bolts yet.
3. Now use two hexagon socket screws to mount the upper antenna segment removed in Point 1 on the lower antenna segment.
   Make sure that the two fan type lock washers are inserted between the antenna segments (these ensure that there is a defined contact resistance)!

Important

To make sure that they function perfectly, the fan-type lock washers (A5, 3-FST DIN 6798 ZN/galvanized) must be replaced after the bolted antenna connection has been loosened three times.

4. Now tighten all antenna-segment bolted connections with a tightening torque of 5 Nm.
5. Then align the antenna to the rotor in such a way that the antenna encloses the rotor more or less coaxially and the antenna wire in the axial direction shows the position and the center of the transmitter winding on the rotor.

   Please comply with the permissible alignment tolerances stated in the specifications.

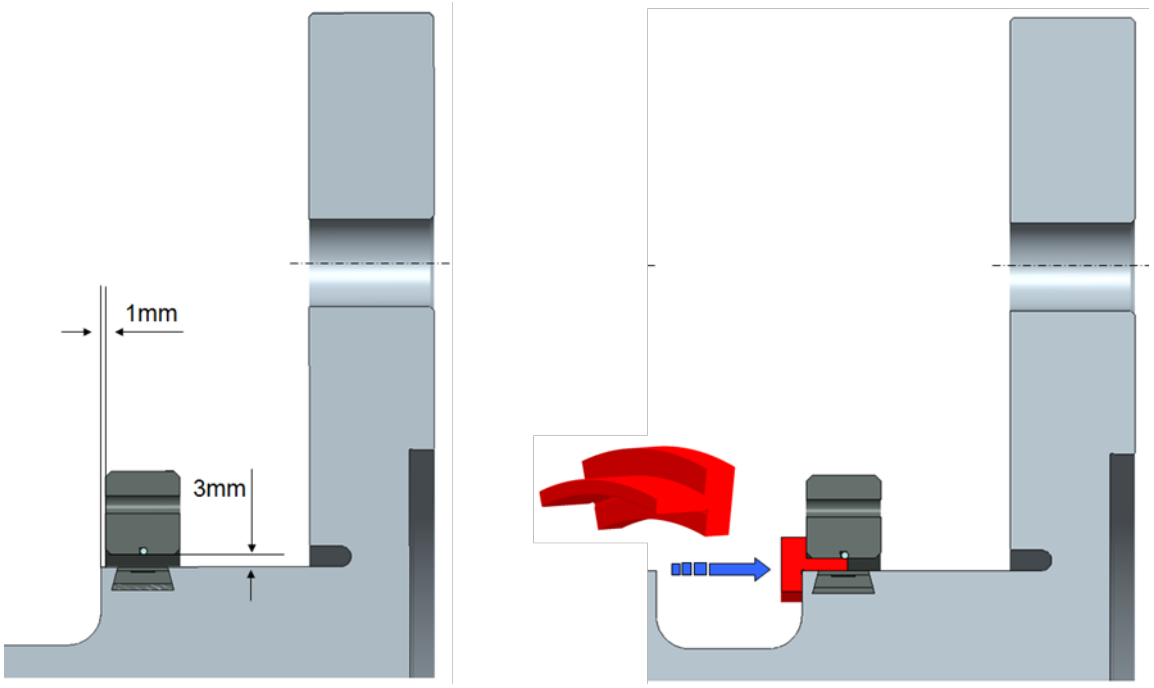

Fig. 5.12: Alignment of the rotor with the stator

6. Now fully tighten the bolted stator housing connection.

Prevention of stator axial oscillation

Depending on the operating conditions, the stator may be excited to vibrate. This effect is dependent on:

- The rotational speed
- The antenna diameter (depends on the measuring range)
- The design of the machine base

Important

To prevent this axial oscillation, the antenna ring requires additional support by the customer. There is a hole on the upper antenna segment (with M5 internal thread), which can be used to incorporate a clamping device (see Fig. 5.13).

The cable plug also requires support in this case, a construction example is shown in Fig. 5.14.

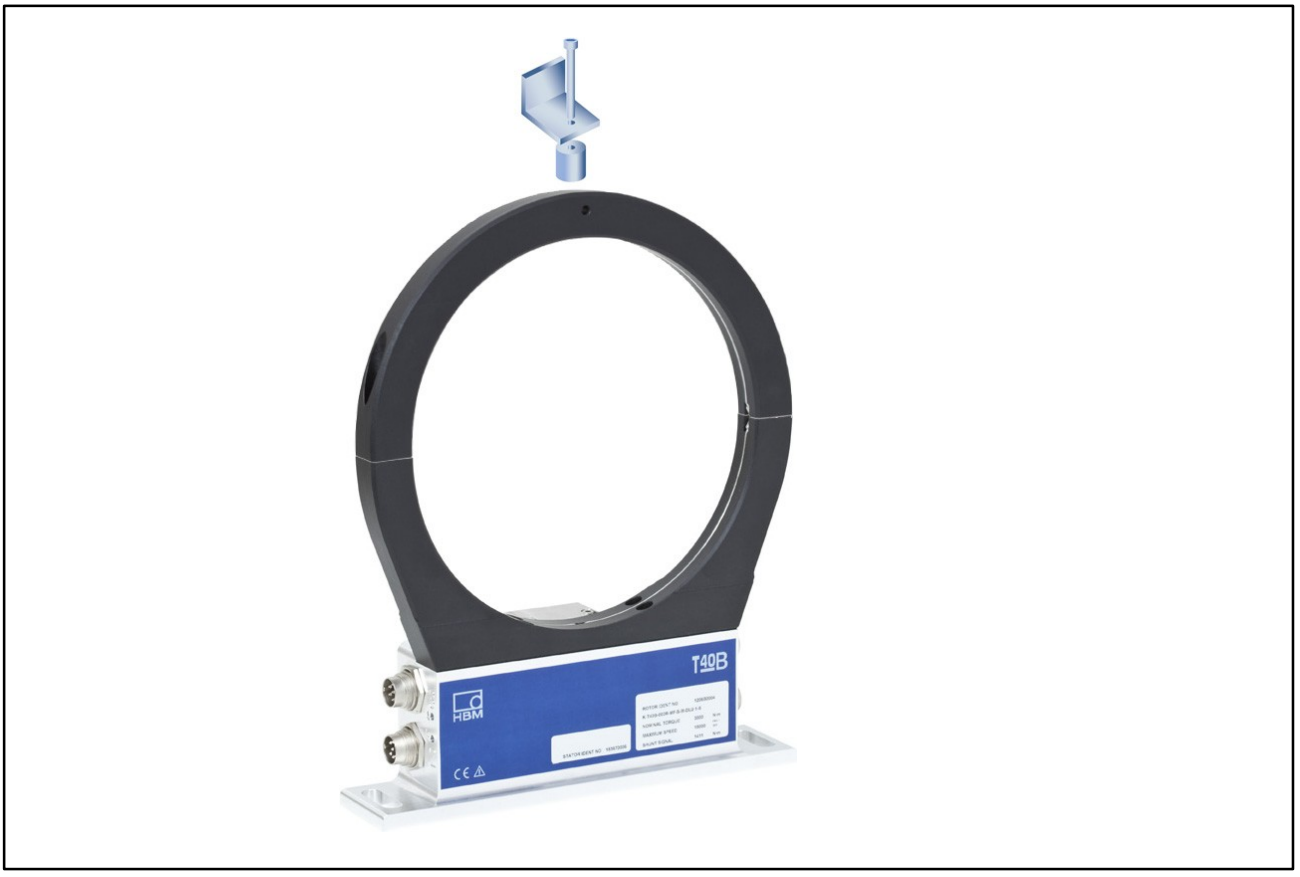

Fig. 5.13: Construction example for supporting the antenna ring

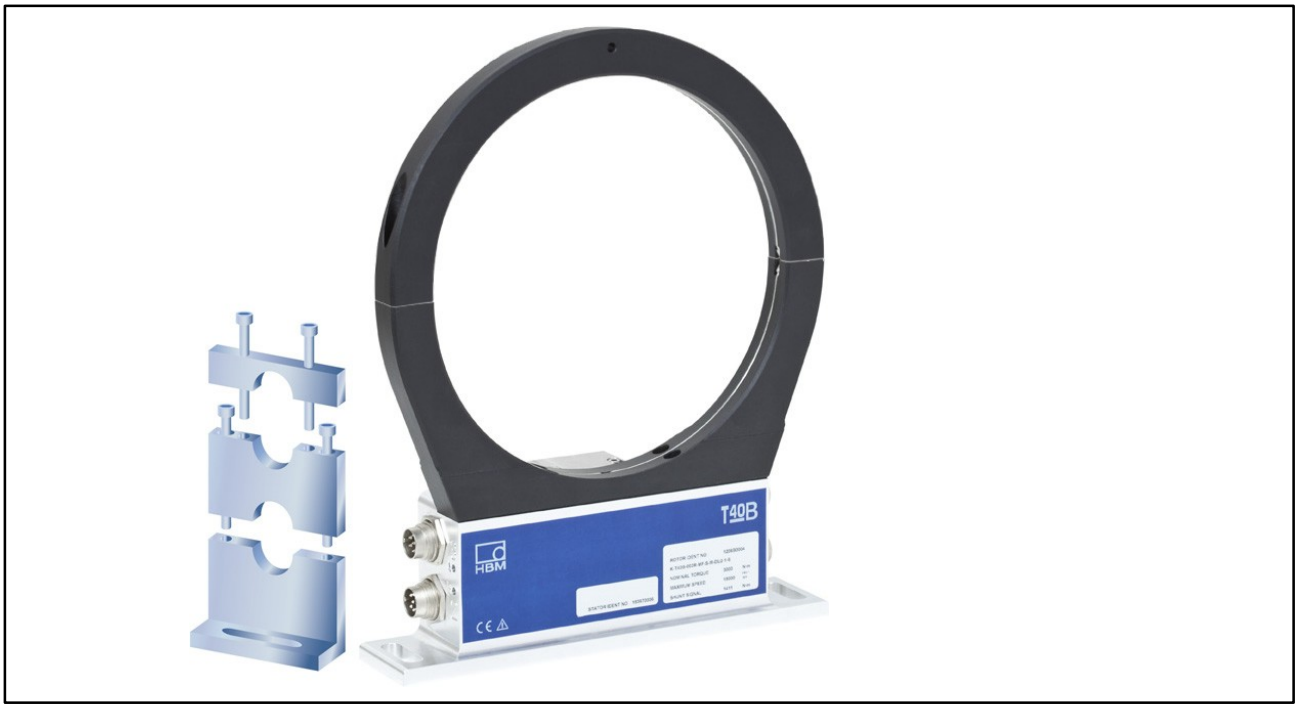

Fig. 5.14: Construction example for connector terminals (for two connectors)

5.7 Speed measuring system (optional)

The optional speed measuring system has already been integrated into the transducer at the factory, no assembly is required.

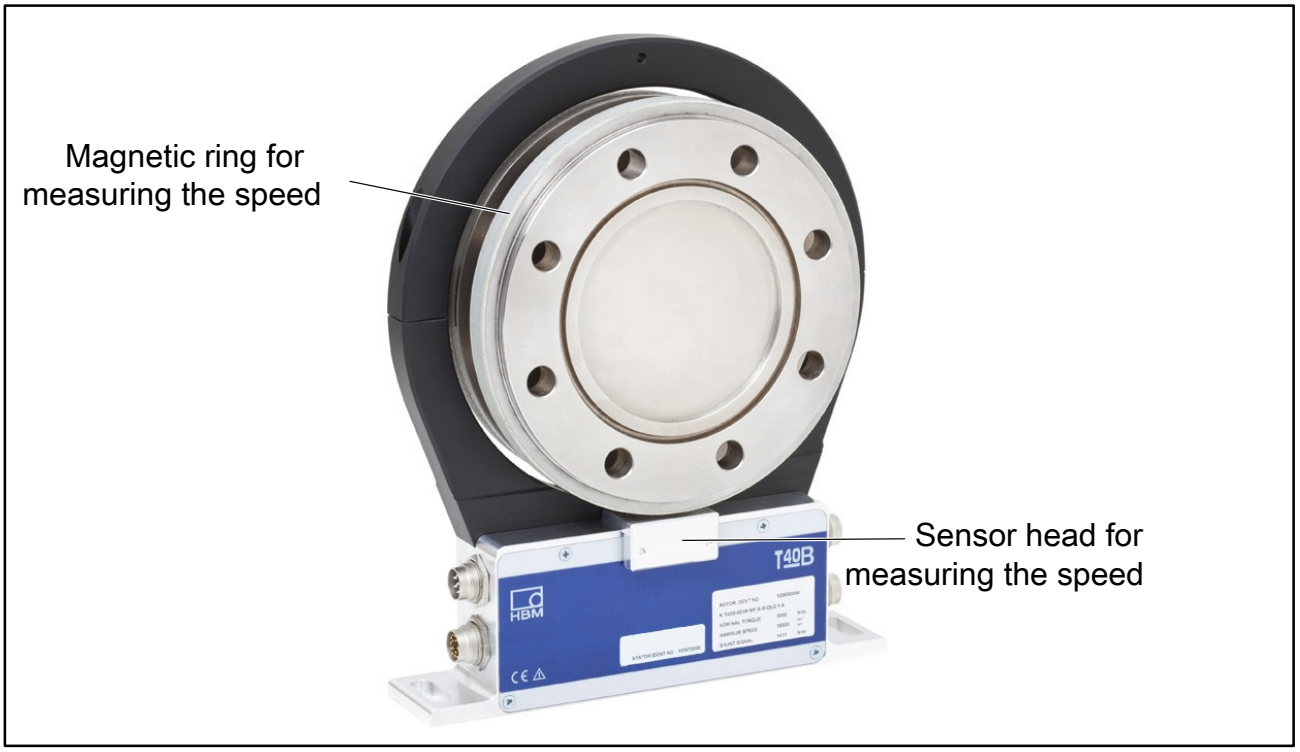

Fig. 5.15: Torque transducer with speed measurement

Speed measuring system sensor head alignment

The speed measuring system is correctly aligned when the stator is precisely aligned for the torque measurement. So the two Allen screws on the sensor head (Fig. 5.16) must not be loosened.

Important

You must not change the position of the sensor head.

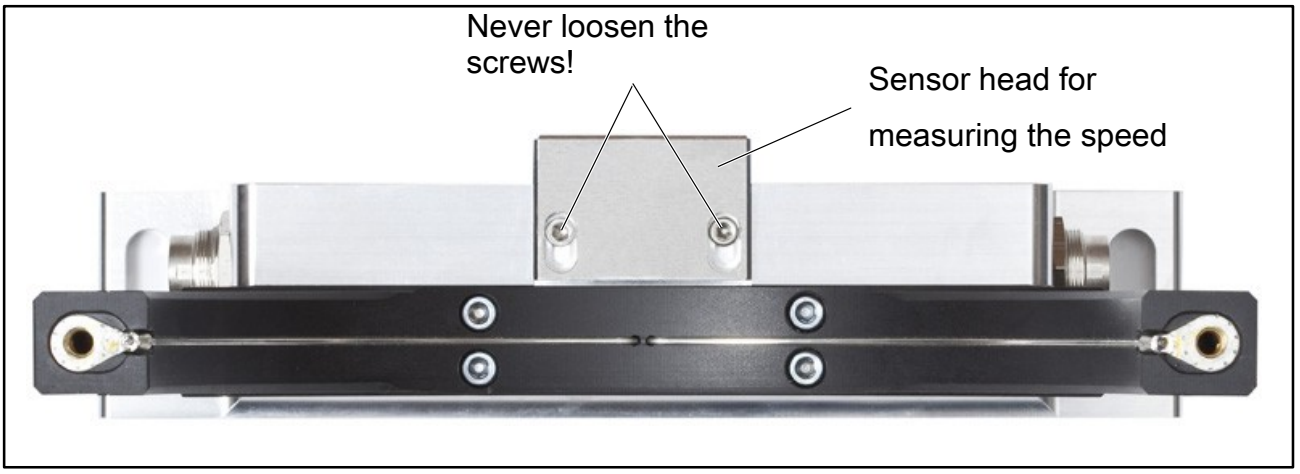

Fig. 5.16: Torque transducer with sensor head for speed measurement

6 Electrical connection

6.1 General instructions

- With cable extensions, make sure that there is a proper connection with minimum contact resistance and good insulation.
- All plug connections or swivel nuts must be fully tightened.

Important

Transducer connection cables from HBM with attached connectors are identified in accordance with their intended purpose (Md or n). When cables are shortened, inserted into cable ducts or installed in control cabinets, this identification can get lost or become concealed. Mark the cables before laying them in this case.

6.2 EMC protection

Important

The product offered here is a special module for stationary plants or a transducer for installation by system integrators or plant engineers and is not intended for general sale. This product does not need an EC Declaration of Conformity or CE marking in compliance with EMVG1 §12 Paragraph 2 and directive 2004/1008/EC Article 13 Paragraph 1.
The product is exclusively manufactured and intended for further processing by companies or persons with expertise in the sector of electromagnetic compatibility (EMC). Relevant EMC protection aims are met with regards to the offered product when the following instructions for installation are observed and implemented.

Special electronic coding methods are used to protect the purely digital signal transmission between the transmitter head and the rotor from electromagnetic interference.

The cable shield is connected with the transducer housing. This encloses the measurement system (without the rotor) in a Faraday cage when the shield is laid flat at both ends of the cable. With other connection techniques, an EMC-proof shield should be applied in the wire area and this shielding should also be connected extensively (see also HBM Greenline Information, brochure i1577).

Electrical and magnetic fields often induce interference voltages in the measuring circuit. Therefore:

- Use shielded, low-capacitance measurement cables only (HBM cables fulfill both conditions).
- **Only use plugs that meet EMC guidelines**.
- Do not route the measurement cables parallel to power lines and control circuits. If this is not possible, protect the measurement cable with e.g. steel conduit.
- Avoid stray fields from transformers, motors and contact switches.
- Do not ground the transducer, amplifier and indicator more than once.
- Connect all devices in the measurement chain to the same grounded conductor.
- In the case of interference due to potential differences (compensating currents), supply voltage zero and housing ground must be disconnected on the amplifier and a potential equalization line established between the stator housing and the amplifier housing (copper conductor, minimum 10 mm^2 wire cross-section).
- Should differences in potential between the machine rotor and stator, because of unchecked leakage, for example, cause interference, this can usually be overcome by connecting the rotor definitively to ground, e.g. with a wire loop. The stator must be connected to the same (ground) potential.

6.3 Connector pin assignment

The stator housing has two 7 pin connectors, an 8 pin connector and a 16 pin connector.

The supply voltage connections and shunt signal connections of connectors 1 and 3 are each electrically interconnected, but are protected against compensating currents by diodes. There is also an automatically resetting fuse (multifuse) to protect the supply connections against overload by the stator.

Assignment for connector 1:

Supply voltage and frequency output signal.

	Plug Pin	Assignment	Wire color	D-Sub Plug Pin
Device connector 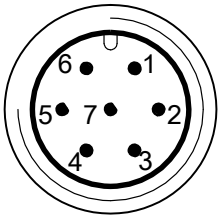 Top view	1	Measurement signal torque (Frequency output; 5 V[1),2)])	wh	13
	2	Supply voltage 0 V;	bk	5
	3	Supply voltage 18 V - 30 V	bu	6
	4	Measurement signal torque (Frequency output; 5 V[1),2)])	rd	12
	5	Meas. signal 0 V; symmetrical	gy	8
	6	Shunt signal resolution 5 V … 30 V	gn	14
	7	Shunt signal 0 V;	gy	8
		Shielding connected to housing ground		

1) RS-422 complementary signals; with cable lengths exceeding 10 m, we recommend using a termination resistor R = 120 ohms between the (wh) and (rd) wires.

2) RS-422: Pin 1 corresponds to A, Pin 4 corresponds to B.

NOTE

These torque flanges are only intended for operation with a DC supply voltage. They must not be connected to older HBM amplifiers with square-wave excitation. This could destroy the connection board resistances or cause other faults in the amplifiers.

Assignment for connector 2:

Speed output signal (optional).

	Plug Pin	Assignment
Device connector 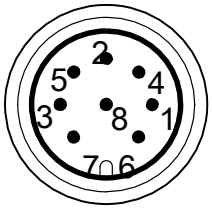 Top view	1	Measurement signal speed [1] (pulse string, 5 V; 0°)
	2	Not in use
	3	Measurement signal speed [1] (pulse string, 5 V; phase shifted by 90°)
	4	Not in use
	5	Not in use
	6	Measurement signal speed [1] (pulse string, 5 V; 0°)
	7	Measurement signal speed [1] (pulse string, 5 V; phase shifted by 90°)
	8	Supply voltage zero
		Shielding connected to housing ground

1) RS-422 complementary signals; with cable lengths exceeding 10 m, we recommend using a termination resistor of R = 120 ohms.

Assignment for connector 3:

Supply voltage and frequency output signal.

	Plug Pin	Assignment
Device connector 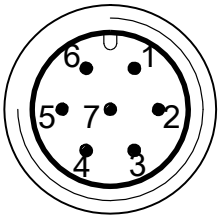 Top view	1	Torque measurement signal (volt. output; 0 V M)
	2	Power supply 0 V; B
	3	Supply voltage 18 V - 30 V DC
	4	Torque measurement signal (voltage output, ±10 V)
	5	Not in use
	6	Shunt signal resolution 5 V - 30 V
	7	Shunt signal 0 V; C
		Shielding connected to housing ground

Assignment for connector 4:

TMC – only for connection to the TIM 40 Torque Interface Module within HBM.

6.4 Supply voltage

The transducer is operated with a separated extra-low voltage (nominal (rated) supply voltage 18 - 30 V_{DC}). You can supply one or more torque flanges simultaneously within a test bench. Should the device be operated on a DC voltage network[1)] , additional precautions must be taken to discharge excess voltages.

The information in this Chapter relates to the standalone operation of the T40FM without HBM system solutions.

The supply voltage is electrically isolated from signal outputs and shunt signal inputs. Connect a separated extra-low voltage of 18 V - 30 V to pin 3 (+) and pin 2 (-) of plug 1 or 3. We recommend that you use HBM cable KAB 8/00-2/2/2 and appropriate sockets (see Accessories). The cable can be up to 50 m long for voltages ≥24 V, otherwise it can be up to 20 m long.

If the permissible cable length is exceeded, you can supply the voltage in parallel over two connection cables (connectors 1 and 3). This enables you to double the permissible length. Alternatively, install a power supply on site.

Important

At the instant of power-up, a current of up to 4 A may flow, which could switch off power packs with electronic current limiters.

7 Shunt signal

The **torque flange** delivers an electrical shunt signal that in measuring chains with HBM components, can be activated from the amplifier. The transducer generates a shunt signal of about 50% of the nominal (rated) torque, the precise value is specified on the type plate. After activation, adjust the amplifier output signal to the shunt signal supplied by the connected transducer to adapt the amplifier to the transducer.

The transducer should not be under load when the shunt signal is being measured, since the shunt signal is mixed additively.

Triggering the shunt signal

Applying a separated extra-low voltage of 5 - 30 V to pins 6 (+) and 7 (-) at connector 1 or 3 triggers the shunt signal.

The nominal (rated) voltage for triggering the shunt signal is 5 V (triggering at U > 2.5 V), but when voltages are less than 0.7 V, the transducer is in measuring mode. The maximum permissible voltage is 30 V, current consumption at nominal (rated) voltage is approx. 2 mA and at maximum voltage, approx. 18 mA. The trigger voltage for the shunt signal is electrically isolated from the supply voltage and the measurement voltage.

Tip

The shunt signal can be triggered by the amplifier or via the operating software in HBM system solutions.

8 Functionality testing

You can check the functionality of the rotor and the stator from the LEDs on the stator.

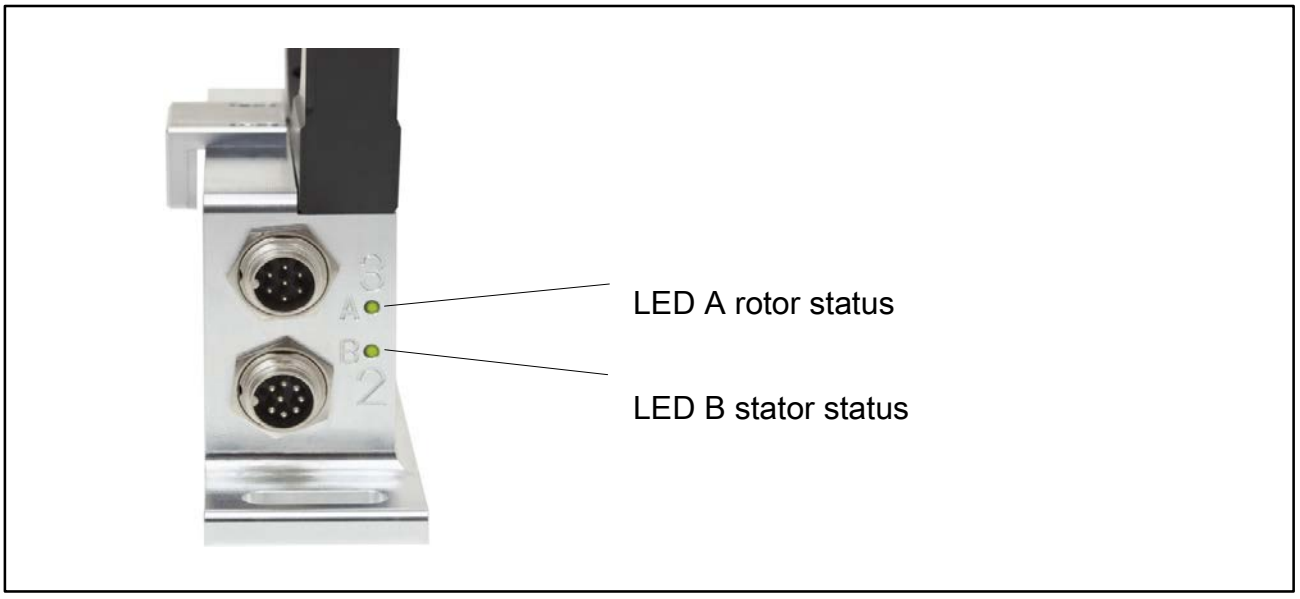

Fig. 8.1: LEDs on the stator housing

8.1 Rotor status, LED A (upper LED)

Color	Meaning
Green (pulsating)	Internal rotor voltage values OK
Flashing orange	Rotor and stator mismatched (an increasing flashing frequency indicates the degree of misalignment) => Correct the rotor/stator alignment.
Pulsating orange	Rotor status cannot be defined => Correct the rotor/stator alignment. If the LED still pulsates orange, it is possible that there is a hardware defect. The measurement signals reflect the level of the defect status.
Red (pulsating)	Rotor voltage values NOK. => Correct the rotor/stator alignment. If the LED still pulsates red, it is possible that there is a hardware defect. The measurement signals reflect the level of the defect status.

Pulsating means that the LED goes dark for about 20 ms every second (sign of life); making it possible to detect that the transducer is functioning.

8.2 Stator status, LED B (lower LED)

Color	Meaning
Green (permanently lit)	Measurement signal transmission and internal stator voltages OK
Green, intermittently orange. For many synchronization errors: Constant orange	Orange until end of defective transmission if ≥5 incorrect measured values in sequence are transmitted. The measurement signals reflect the level of the defect status for the duration of the transmission defect + approx. another 3.3 ms.
Orange (permanently lit)	Permanently disrupted transmission, the measurement signals reflect the level of the defect status. (f_{out} = 0 Hz, U_{out} = defect level). => Correct the rotor/stator alignment.
Red (permanently lit)	Internal stator defect, the measurement signals reflect the level of the defect status (f_{out} = 0 Hz, U_{out} = defect level).

9 Loading capacity

Nominal torque can be exceeded statically up to the limit torque. If the nominal torque is exceeded, additional irregular loading is not permissible. This includes longitudinal forces, lateral forces and bending moments. Limit values can be found in the chapter "Specifications" (Chapter 13, Page 115).

Measuring dynamic torque

The torque flange can be used to measure static and dynamic torques. The following rule applies to the measurement of dynamic torque:

- The transducer calibration performed for static measurements is also valid for dynamic torque measurements.
- The natural frequency f_0 of the mechanical measurement setup depends on the moments of inertia J_1 and J_2 of the connected rotating masses, and the torsional stiffness of the transducer.

Use the equation below to approximately determine the natural frequency f_0 of the mechanical measuring arrangement:

$$f_0 = \frac{1}{2\pi} \cdot \sqrt{c_T \cdot \left(\frac{1}{J_1} + \frac{1}{J_2}\right)}$$

f_0 = **Natural frequency in Hz**
J_1, J_2 = **Mass moment of inertia in kg·m^2**
c_T = **Torsional stiffness in N m/rad**

- The permissible mechanical vibration bandwidth (peak-peak) can also be found in the specifications.

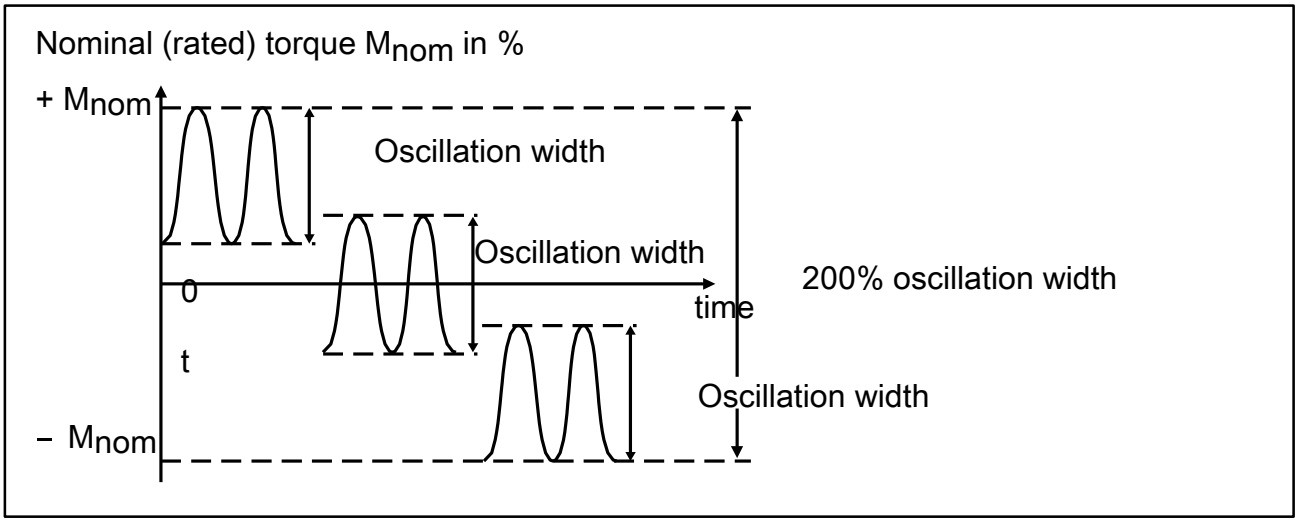

Fig. 9.1: Permissible dynamic loading

10 Maintenance

The torque flanges are maintenance-free.

11 Waste disposal and environmental protection

All electrical and electronic products must be disposed of as hazardous waste. The correct disposal of old equipment prevents ecological damage and health hazards.

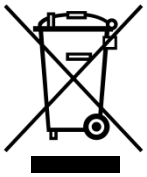

Symbol:

Meaning: Statutory waste disposal mark

The electrical and electronic devices that bear this symbol are subject to the European waste electrical and electronic equipment directive 2002/96/EC. The symbol indicates that, in accordance with national and local environmental protection and material recovery and recycling regulations, old devices that can no longer be used must be disposed of separately and not with normal household garbage.

As waste disposal regulations may differ from country to country, we ask that you contact your supplier to determine what type of disposal or recycling is legally applicable in your country.

Packaging

The original packaging of HBM devices is made from recyclable material and can be sent for recycling. Store the packaging for at least the duration of the warranty. In the case of complaints, the torque flange must be returned in the original packaging.

For ecological reasons, empty packaging should not be returned to us.

12 Dimensions

12.1 Torque flange - 15kN·m

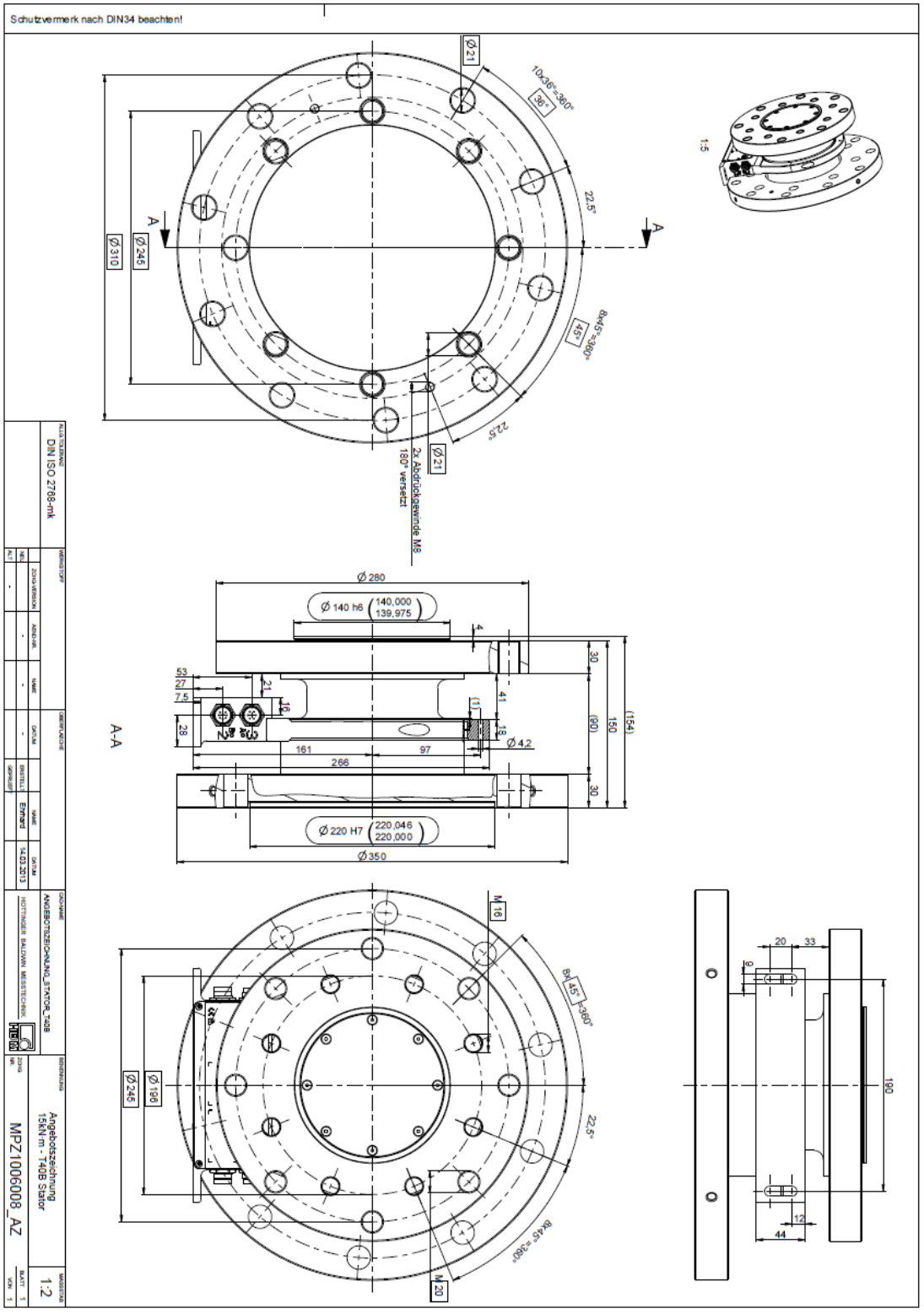

12.2 Torque flange - 25kN·m

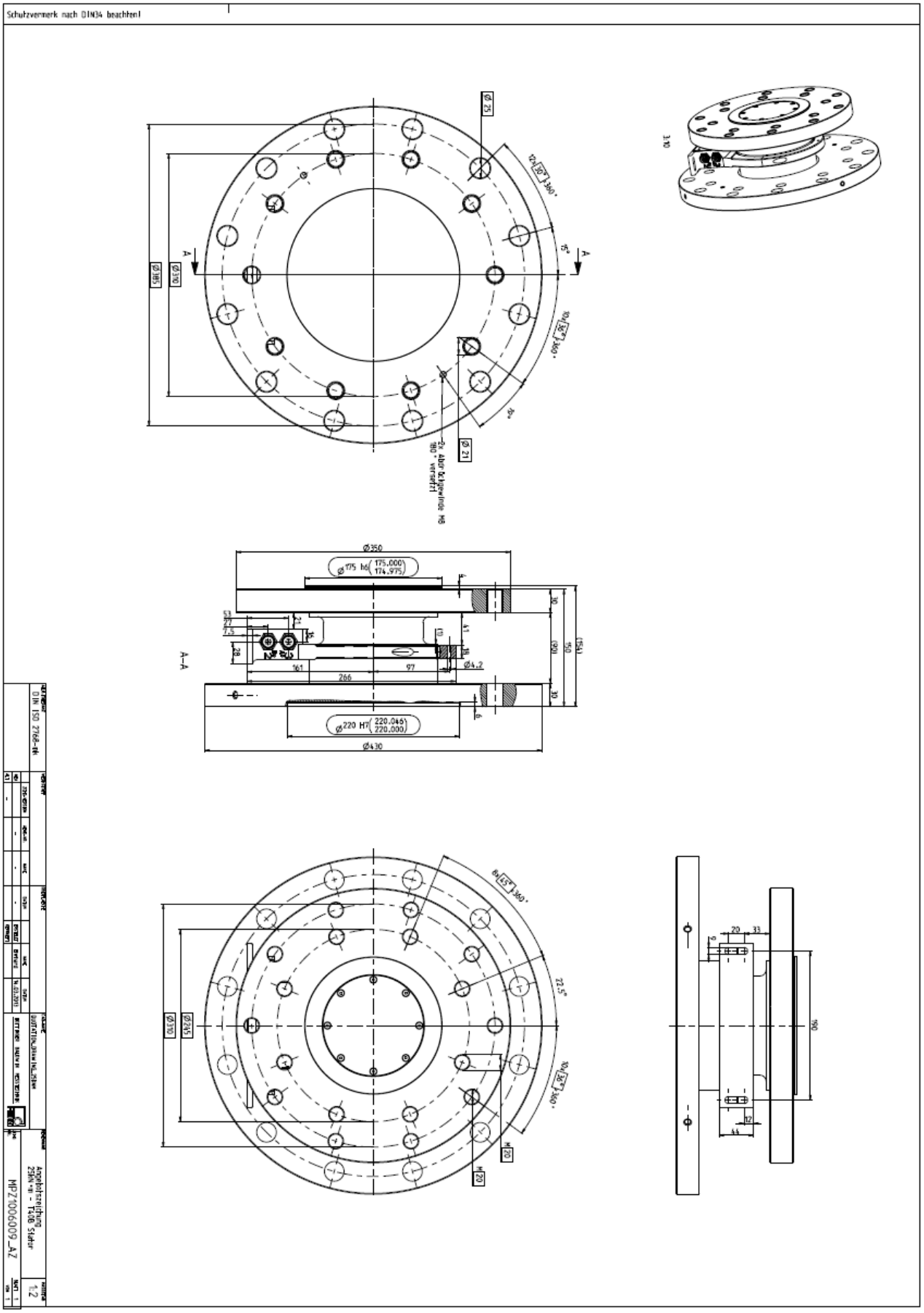

13 Order numbers, accessories

Accessories, to be ordered separately

Article	Order No.
Connection cable, set	
Torque connection cable, Binder 423 – D-Sub 15P, 6 m	1-KAB149-6
Torque connection cable, Binder 423 – free ends, 6 m	1-KAB153-6
Speed connection cable, Binder 423 – 8 pin, free ends, 6 m	1-KAB154-6
Speed connection cable, Binder 423 – 8 pin, D-Sub, free ends, 6 m	1-KAB163-6
TMC connection cable, Binder 423 – 16 pin, free ends, 6 m	1-KAB174-6
Cable sockets	
423G-7S, 7 pin (straight)	3-3101.0247
423W-7S, 7 pin (angle)	3-3312.0281
423G-8S, 8-pin (straight)	3-3312.0120
423W-8S, 8 pin (angle)	3-3312.0282
Connection cable, by the meter (minimum order quantity: 10 m, price per meter)	
Kab8/00-2/2/2	4-3301.0071

14 Specifications

Type		MPZ1006008-12 / MPZ1006009-12	
Accuracy class		0.1	
Torque measuring system			
Nominal (rated) torque M_{nom}	kN·m	15	25
Nominal (rated) sensitivity (spread between torque = zero and nominal (rated) torque)			
Freq. output 10 kHz / 60 kHz / 240 kHz	kHz	30	
Voltage output	V	10	
Sensitivity tolerance (deviation of the actual output quantity at M_{nom} from the nominal (rated) sensitivity)			
Voltage output	%	±0.1	
Output signal at torque = zero			
Frequency output	kHz	60	
Voltage output	V	0	
Nominal output signal			
Frequency output			
at positive nominal (rated) torque	kHz	90 [2] (5 V symmetrical [4])	
at negative nominal (rated) torque	kHz	30 [2] (5 V symmetrical [4])	
Voltage output			
at positive nominal (rated) torque	V	+10	
at negative nominal (rated) torque	V	-10	
Load resistance			
Frequency output	kΩ	≥ 2	
Voltage output	kΩ	≥10	
Long-term drift over 48 h			
Frequency output	%	<±0.03	
Voltage output	%	<±0.03	
Measurement frequency range, -3 dB	kHz	3 [2]	
Group delay	µs	<220 [2]	
Residual ripple			
Voltage output [5]	mV	<40	
Temperature influence per 10 K in the nominal temperature range			
on the output signal, related to the actual value of the signal span			
Frequency output	%	±0.05	
Voltage output	%	±0.2	
on the zero signal, related to the nominal (rated) sensitivity			
Frequency output	%	±0.05	
Voltage output	%	±0.1	

Maximum level control range 6)		
Frequency output	kHz	15 - 105 2)
Voltage output	V	-12 - +12
Energy supply		
Nominal (rated) supply voltage (separated extra low DC voltage)	V	18 - 30
Current consumption in measuring mode	A	< 1
Current consumption in start-up mode	A	< 4 (typ. 2) 50 µs
Nominal (rated) power consumption	W	< 10
Maximum cable length	m	50
Linearity deviation, including hysteresis, relative to nominal (rated) sensitivity		
Frequency output	%	<±“0.03
Voltage output	%	<±“0.03
Rel. Standard deviation of repeatability as per DIN 1319, relative to the variation of the output signal		
Frequency output	%	<±“0.03
Voltage output	%	<±“0.03
Shunt signal		approx. 50 % of M_{nom}
Tolerance of the shunt signal, related to M_{nom}	%	<±“0.05
Nominal (rated) trigger voltage	V	5
Trigger voltage limit	V	36
Shunt signal ON	V	min. >2.5
Shunt signal OFF	V	max. <0.7

2) Option 5, 60±30 kHz (Code DU2)

4) Complementary signals RS-422, note termination resistor.

5) Signal frequency range 0.1 to 10 kHz

6) Output signal range in which there is a repeatable correlation between torque and output signal.

General information			
Nominal (rated) torque M_{nom}	N·m		
	kN·m	15	25
EMC Emission (per EN 61326-1, Section 7) RFI field strength	–	C	
EMC Emission (per FCC 47 Part 15, Subpart C) RFI field strength			
Interference immunity(EN 61326-1, Table 2) Electromagnetic field (AM) Magnetic field Electrostatic discharge (ESD) Contact discharge Air discharge Rapid transients (burst) Impulse voltages (surge) Conducted interference (AM)	 V/m A/m kV kV kV kV V	 10 100 4 8 1 1 10	
Degree of protection per EN 60 529		IP 54	
Reference temperature Nominal (rated) temperature range Operating temperature range Storage temperature range	°C °C °C °C	23 +10 - +70 -20 - +85 -40 - +85	
Mechanical shockas per EN-60068-2-27 [10)] Quantity Duration Acceleration (half sine)	 n ms m/s^2	 1000 3 650	
Vibrational stress in 3 directions as per EN-60068-2-6 [10)] Frequency range Duration Acceleration (amplitude)	 Hz h m/s^2	 10 - 2000 2.5 200	
Nominal (rated) speed	rpm	4500	3000
Load limits [11)]			
Limit torque, relative to Mnom [12)]	%	130	
Breaking torque, relative to Mnom [12)]	%	>250	
Longitudinal limit force [13)]	kN	60	
Lateral limit force [13)]	kN	50	
Bending limit force [13)]	kN·m	6	
Oscillation width as per DIN-50100 (peak/peak) [14)]	% of M_{nom}	120	

Mechanical values			
Nominal (rated) torque Mnom	kN·m	15	25
Torsional stiffness cT	kN·m/rad	11600	15600
Torsion angle at Mnom	Degree	0,074	0,092
Balancing grade acc. DIN ISO 1940		G 2,5	
Mass moment of inertia of the rotor Jv (without speed measuring system)	kg*m^2	0,46	1,05
Max. permissible static eccentricity of the rotor (radial) to the center point of the stator without speed measuring system	mm	±2	
Permissible axial displacement between rotor and stator 16) without speed measuring system	mm	±2	
Weight Rotor without speed measuring system Stator	 kg kg	 38 1,1	 57 1,1

10) The antenna ring and connection plug must be fixed.

11) Each type of irregular stress (bending moment, lateral or longitudinal force, exceeding nominal (rated) torque) can only be permitted up to its specified static load limit provided none of the others can occur at the same time. If this condition is not met, the limit values must be reduced. If 30% of the bending limit moment and lateral limit force occur at the same time, only 40% of the longitudinal limit force is permissible and the nominal (rated) torque must not be exceeded. The permissible bending moments, longitudinal forces and lateral forces can affect the measurement result by approx. 0.3 % of the nominal (rated) torque. The load limits only apply for the nominal (rated) temperature range. At temperatures <10 C°, load limits are expected to reduce by up to 30%, because there is an increased reduction in toughness as temperatures fall.

12) With static loading.

13) Static and dynamic.

14) The nominal (rated) torque must not be exceeded.

16) Above the nominal (rated) temperature range: ± 1.5 mm

15 Supplementary technical information

Axial and radial run-out tolerances

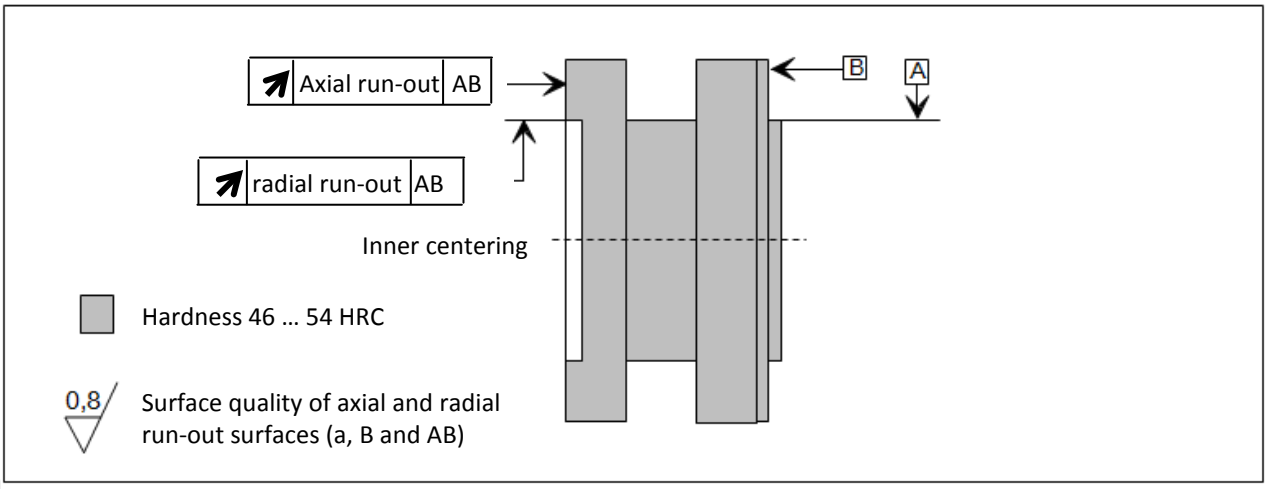

		(mm)
15	0,02	0,02
25	0,02	0,02

To ensure that the torque flange retains its characteristics once it is installed, we recommend that the customer also chooses the specified form and position tolerances, surface quality and hardness for the connections provided.

© Hottinger Baldwin Messtechnik GmbH.

All rights reserved.
All details describe our products in general form only.
They are not to be understood as express warranty and do not constitute any liability whatsoever.

Änderungen vorbehalten.
Alle Angaben beschreiben unsere Produkte in allgemeiner Form. Sie stellen keine Beschaffenheits- oder Haltbarkeitsgarantie im Sinne des §443 BGB dar und begründen keine Haftung.

Hottinger Baldwin Messtechnik GmbH
Im Tiefen See 45 • 64293 Darmstadt • Germany
Tel. +49 6151 803-0 • Fax: +49 6151 803-9100
Email: info@hbm.com • www.hbm.com

measure and predict with confidence