Mounting instructions

Installation of strain gages and telemetry system on customer diaphragm coupling

TJ1-S8 (MPZ1501008)

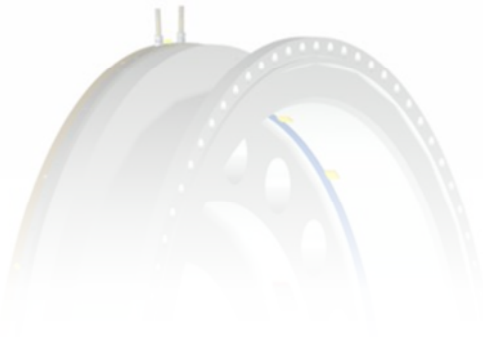

measurement with confidence

Directory

1 Safety Instructions 3
2 Markings used 1
2.1 Symbols on the transducer 1
2.2 The markings used in this document 2
3 Application 2
4 Structure and mode of operation 3
5 Mechanical installation 5
5.1 Important precautions during installation 5
5.2 Conditions on site 6
5.3 Installation orientation 6
5.4 Installation 7
5.5 Preparing for the rotor mounting (exemplary) 7
5.6 Mounting the rotor 9
5.7 Installing the telemetry system 10
5.7.1 Measuring setup 11
5.7.2 Instruction for installation 12
..... 12
5.7.3 Calibration signal 13
5.7.4 Stator antenna 13
..... 14
5.7.5 Evaluation unit 14
6 Electrical connection 18
6.1 Use of EMI suppressor 19
6.2 Connector pin assignment 20
6.3 Supply voltage 21
7 Functional testing 21
8 Maintenance 22
9 Dimensions of the stator antenna 23
10 Dimensions of the rotor antenna 24
11 Declaration of conformity 25

1 Safety Instructions

FCC Compliance & Advisory Statement

Important

Any changes or modification not expressly approved in writing by by the party responsible for compliance could void the user's authority to operate the device. Where specified additional components or accessories elsewhere defined to be used with the installation of the product, they must be used in order to ensure compliance with FCC regulations.

This device complies with Part 15 of the FCC Rules. Operation is subject to the following two conditions: (1) this device may not cause harmful interference, and (2) this device must accept any interference received, including interference that may cause undesired operation.

The FCC identifier or the unique identifier, as appropriate, must be displayed on the device.

Model	**Measuring range**	**FCC ID**	**IC**
TJ1-S8	1100 kN·m	2ADAT-TJ1S8	n.a.

Label example with FCC ID.

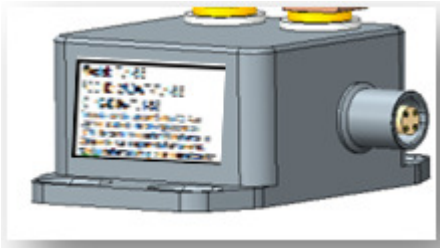

Fig 1.1: Location of the label on the stator of the device

Model: TJ1-S8
FCC ID: 2ADAT-TJ1S8
This device complies with part 15 of the FCC Rules.
Operation is subject to the following two conditions:
(1) This device may not cause harmful interference, and
(2) this device must accept any interference received,
including interference that may cause undesired operation.

Fig. 1.2 Example of the label

Appropriate use

The torque transducer is used exclusively for torque, angle of rotation and power measurement tasks within the load limits stipulated in the specifications. Any other use is not the designated use.

Stator operation is only permitted when the rotor and stator antenna are coupled.

The torque flange may only be installed by qualified personnel in compliance with the specifications and with the safety requirements and regulations of these mounting instructions. It is also essential to observe the applicable legal and safety regulations for the application concerned. The same applies to the use of accessories.

The torque flange is not intended for use as a safety component. Please also refer to the section: “Additional safety precautions". Proper and safe operation requires proper transportation, correct storage, siting and mounting, and careful operation.

Loading capacity limits

The data in the technical data sheets must be complied with when using the torque flange. In particular, the respective maximum loads specified must never be exceeded. The values stated in the specifications-must not be exceeded, for example, for

- limit torque,
- longitudinal limit force, lateral limit force or limit bending moment,
- torque oscillation width,
- breaking torque,
- temperature limits,
- the limits of the electrical loading capacity.

Use as a machine element

The torque flange can be used as a machine element. When used in this manner, it must be noted that, to favor greater sensitivity, the transducer is not designed with the safety factors usual in mechanical engineering. Please refer here to the section “Loading capacity limits", and to the specifications.

Accident prevention

According to the prevailing accident prevention regulations, once the transducers have been mounted, a covering agent or cladding has to be fitted as follows:

- The covering agent or cladding must not be free to rotate.
- The covering agent or cladding should prevent squeezing or shearing and provide protection against parts that might come loose.
- Covering agents and cladding must be positioned at a suitable distance or be so arranged that there is no access to any moving parts within.
- Covering agents and cladding must still be attached even if the moving parts of the torque flange are installed outside people's movement and working range.

The only permitted exceptions to the above requirements are if the torque flange is already fully protected by the design of the machine or by existing safety precautions.

Additional safety precautions

The torque flange cannot (as a passive transducer) implement any (safety-rel evant) cutoffs. This requires additional components and constructive measures for which the installer and operator of the plant is responsible. The layout of the electronics conditioning the measurement signal should be such that measurement signal failure does not cause damage.

The scope of supply and performance of the transducer covers only a small area of torque measurement technology. In addition, equipment planners, installers and operators should plan, implement and respond to safety engineering considerations in such a way as to minimize residual dangers. Pertinent national and local regulations must be complied with.

General dangers of failing to follow the safety instructions

The torque flange corresponds to the state of the art and is failsafe. Transducers can give rise to residual dangers if they are incorrectly operated or inappropriately mounted, installed and operated by untrained personnel. Every person involved with siting, starting-up, operating or repairing a torque flange must have read and understood the mounting instructions and in particular the technical safety instructions. The transducers can be damaged or destroyed by non-designated use of the transducer or by non-compliance with the mounting and operating instructions, these safety instructions or any other

applicable safety regulations (safety and accident prevention regulations), when using the transducers. Transducers can break, particularly in the case of overloading. The breakage of a transducer can also cause damage to property or injury to persons in the vicinity of the transducer.

If the torque flange is not used according to the designated use, or if the safety instructions or specifications in the mounting and operating instructions are ignored, it is also possible that the transducer may fail or malfunction, with the result that persons or property may be adversely affected (due to the torques acting on or being monitored by the torque flange).

Conversions and modifications

The transducer must not be modified from the design or safety engineering point of view except with our express agreement. Any modification shall exclude all liability on our part for any damage resulting therefrom.

Selling on

If the torque flange is sold on, these mounting instructions must be included with the torque flange.

Qualified personnel

Qualified personnel means persons entrusted with siting, mounting, starting up and operating the product, who possess the appropriate qualifications for their function.

This includes people who meet at least one of the three following requirements:

- Knowledge of the safety concepts of automation technology is a requirement and as project personnel, you must be familiar with these concepts.
- As automation plant operating personnel, you have been instructed how to handle the machinery. You are familiar with the operation of the equipment and technologies described in this documentation.
- As commissioning engineers or service engineers, you have successfully completed the training to qualify you to repair the automation systems. You are also authorized to activate, ground and label circuits and equipment in accordance with safety engineering standards.

2 Markings used

2.1 Symbols on the transducer

Label example

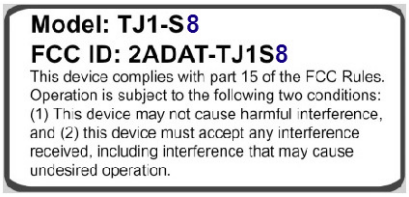

Label example with FCC ID number,

Location of label on the stator unit.

2.2 The markings used in this document

Important instructions for your safety are specifically identified. It is essential to follow these instructions in order to prevent accidents and damage the property.

Symbol	Meaning
⚠ WARNING	This marking warns of a *potentially* dangerous situation in which failure to comply with safety requirements *can* result in death or serious physical injury.
⚠ CAUTION	This marking warns of a *potentially* dangerous situation in which failure to comply with safety requirements *can* result in slight or moderate physical injury.
NOTE	This marking draws your attention to a situation in which failure to comply with safety requirements *can* lead to damage to property.
i ***Important***	This marking draws your attention to *important* information about the product or about handling the product.
i **Tip**	This marking indicates application tips or other information that is useful to you.
i	This marking draws your attention to information about the product or about handling the product.
Emphasis	Italics are used to emphasize and highlight texts.

3 Application

This transducer is designed only for the following machine:

- GE Company – Gas Turbine Test Stand with coupling 7HA.02 according request MPZ1501008

4 Structure and mode of operation

The torque flange consists of two separate parts: the rotor and the stator. The rotor comprises the measuring body and the signal transmission elements.

Strain gauges (SGs) are installed on the measuring body. The rotor electronics for transmitting the bridge excitation voltage and the measurement signal are located centrally in the flange. The transmitter coils for contactless transmission of excitation voltage and measurement signal are located on the measuring body's outer circumference. The signals are sent and received by a separable stator antenna. The antenna has to be mounted close to the rotor antenna. The connection cable connects the stator antenna with the evaluation unit which contains the electronics for voltage adaptation and the signal conditioning.

Connector plugs for the torque signal and the voltage supply are located on the evaluation unit. The stator antenna should be mounted tangential with some gap to the rotor antenna (see chapter 5).

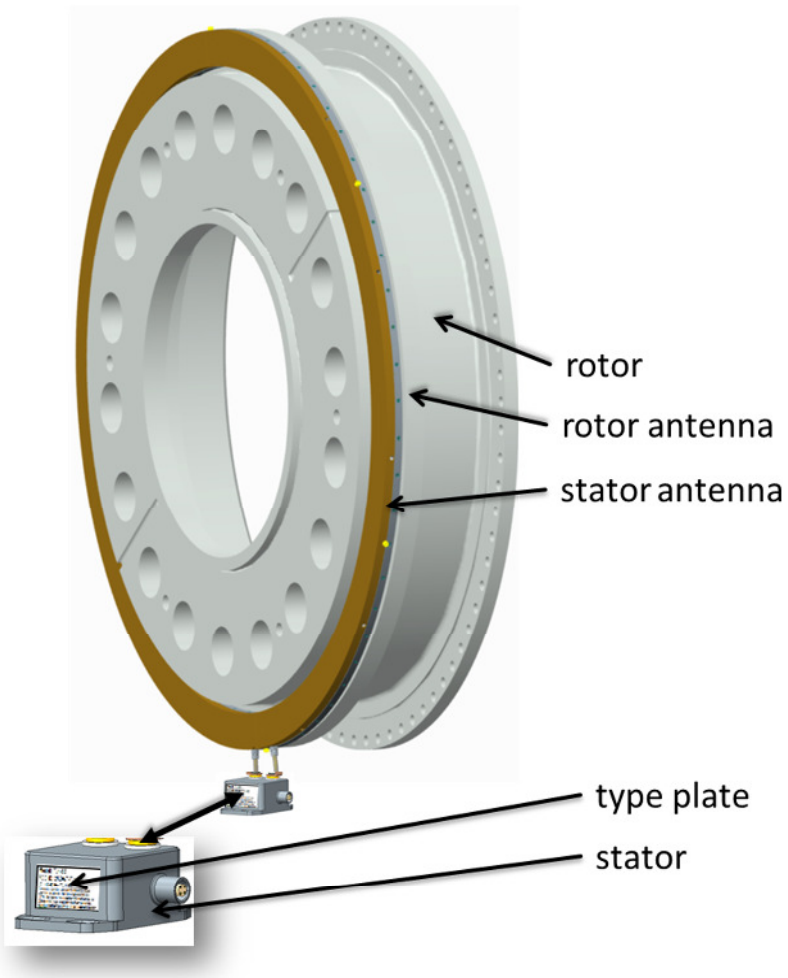

Fig 4.1: Mechanical construction

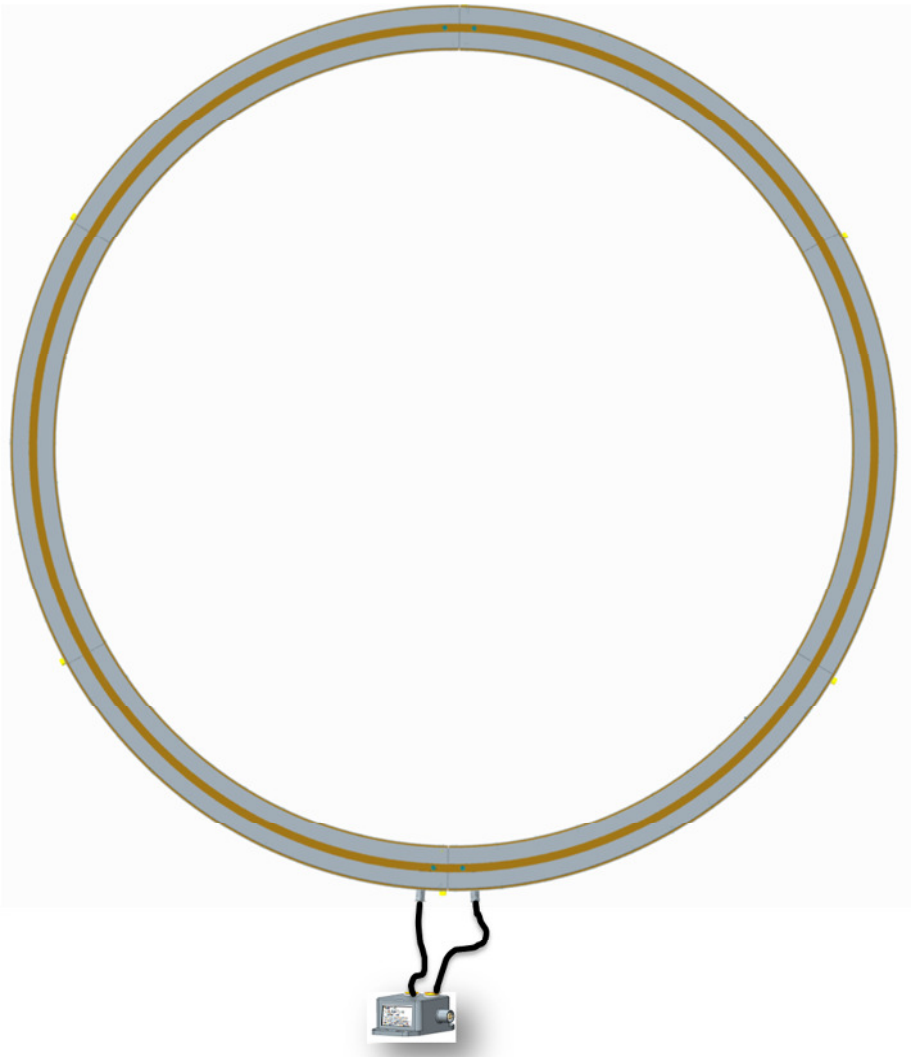

Fig 4.2: Mechanical construction of stator with mounted shielding

Important

The use of the shielding plates is important to ensure compliance with FCC regulations. If the shielding plates has to be removed for any purpose (e.g. installation or maintenance), they must be replaced in the original position before the product is used.

5 Mechanical installation

5.1 Important precautions during installation

NOTE

A torque flange is a precision measurement element and therefore needs careful handling. Dropping or knocking the transducer may cause permanent damage. Make sure that the transducer cannot be overloaded, even while it is being mounted.

- Handle the transducer with care.
- Check the effect of bending moments, critical rotational speeds and natural torsional oscillations, to prevent the transducer being overloaded by increases in resonance.
- Make sure that the transducer cannot be overloaded.

⚠ WARNING

There is a danger of the transducer breaking if it is overloaded. This can cause danger for the operating personnel of the system in which the transducer is installed.
Implement appropriate safety measures to avoid overloads and to protect against resulting dangers.

- If alternating loads are expected, use thread locker (medium strength, e.g. LOCTITE No. 242) to fix the screws into the threaded holes to exclude loss of tightening stress due to screw slackening.
- Comply with the mounting dimensions to enable correct operation.

Under no circumstances should the permissible limits specified for bending moments, lateral and longitudinal forces be exceeded. Due to the torque flange's high torsional stiffness, dynamic shaft train changes are kept to a minimum.

Important

Even if the unit is installed correctly, the zero point adjustment made at the factory can shift by up to approx. 0.5% of the sensitivity. If this value is exceeded, we advise you to check the mounting conditions. If the residual zero offset when the unit is removed is greater than 1% of the sensitivity, please send the transducer back to the Darmstadt factory for testing.

5.2 Conditions on site

The torque flange must be protected against coarse dirt particles, dust, oil, solvents and humidity.

There is wide ranging compensation for the effects of temperature on the output and zero signals of the transducer (see “Specifications" section). If there are no static temperature ratios, for example, because of the temperature differences between the measuring body and the flange, the values given in the specifications can be exceeded. In this case, ensure static temperature ratios by cooling or heating, depending on the application. As an alternative, check if thermal decoupling is possible, e.g. by means of heat radiating elements such as multiple disc couplings.

5.3 Installation orientation

The torque flange can be installed with any orientation.

With clockwise torque load, the output signal is from 10 kHz to 15 kHz corresponding zero to nominal torque load.

5.4 Installation

Please mount the rotor & stator simultaneous to its final position, so that you don't need to separate the stator winding. The stator antenna should only be separated in case of an emergency.
For dismounting instructions please contact the responsible HBM sales engineer.

5.5 Preparing for the rotor mounting (exemplary)

⚠ CAUTION

The rotor is very heavy (approx. 170kg)!
Use a crane or other suitable lifting equipment to lift it out of its packaging and install it.

Use flexible eye bolts as transport and mounting aids. Hook the lifting equipment to these eye bolts as this ensures that the rotor is lifted horizontally out of the packaging (see Fig 4.1).

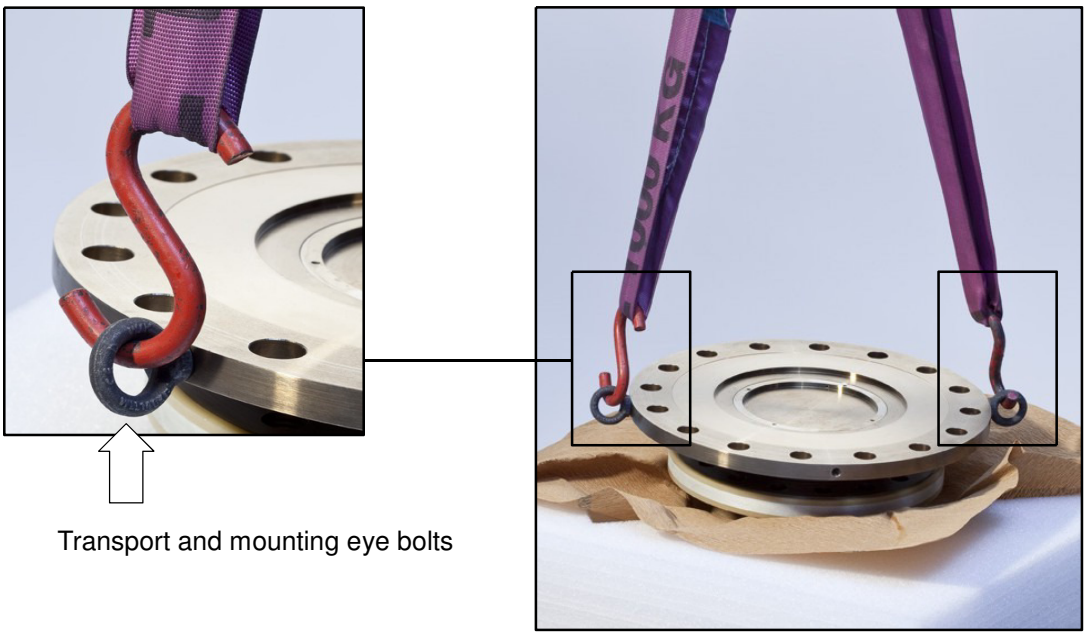

Fig 5.1: Transport and mounting eye bolts on the rotor

1. Lift the rotor out of the packaging, rotate horizontally by 180°, so that the bigger flange is pointing upwards (see exemplary Fig 5.1).

Fig 5.2: Rotating the rotor

2. Place the rotor carefully onto a clean and stable table.
3. If the rotor is to be installed horizontally as shown in Fig 5.3, remove *one* mounting eye bolt. Both mounting eye bolts can initially remain in the flange for vertical installation.

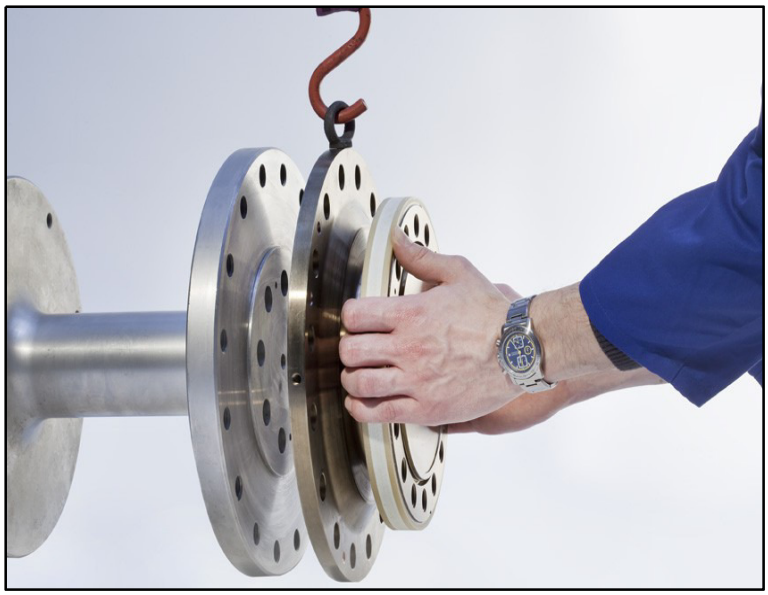

Fig 5.3: Rotor installation (horizontal)

4. Clean the plane surfaces of the transducer flange and the counter flange.
   For safe torque transfer, the faces must be clean and free from grease. Use a piece of cloth or paper soaked in solvent. Make sure that no solvent drips into the inside of the transducer and that the transmitter coils are not damaged during cleaning.
5. Fasten the lifting equipment to the mounting eye bolt(s).
6. Carefully lift up the rotor and move it to the mounting position (see Fig 5.1).

5.6 Mounting the rotor

1. Prior to installation, clean the plane faces of the transducer flange and the counter flange.
   For safe torque transfer, the faces must be clean and free from grease. Use a piece of cloth or paper soaked in solvent. When cleaning, make sure that you do not damage the transmitter winding.

Important

If alternating loads are expected, use thread locker (medium strength, e.g. LOCTITE No. 242) to glue the screws into the counter thread to exclude loss of tightening stress due to screw slackening.

3. Fasten all screws with the specified torque.
4. Now remove the ring bolts and mounting ring(s).

Important

Keep them in a safe place for future dismounting.

5.7 Installing the telemetry system

The telemetry system consists of the following component parts:

- Rotor antenna
- Stator antenna
- Stator
- Evaluation unit
- Connection cable

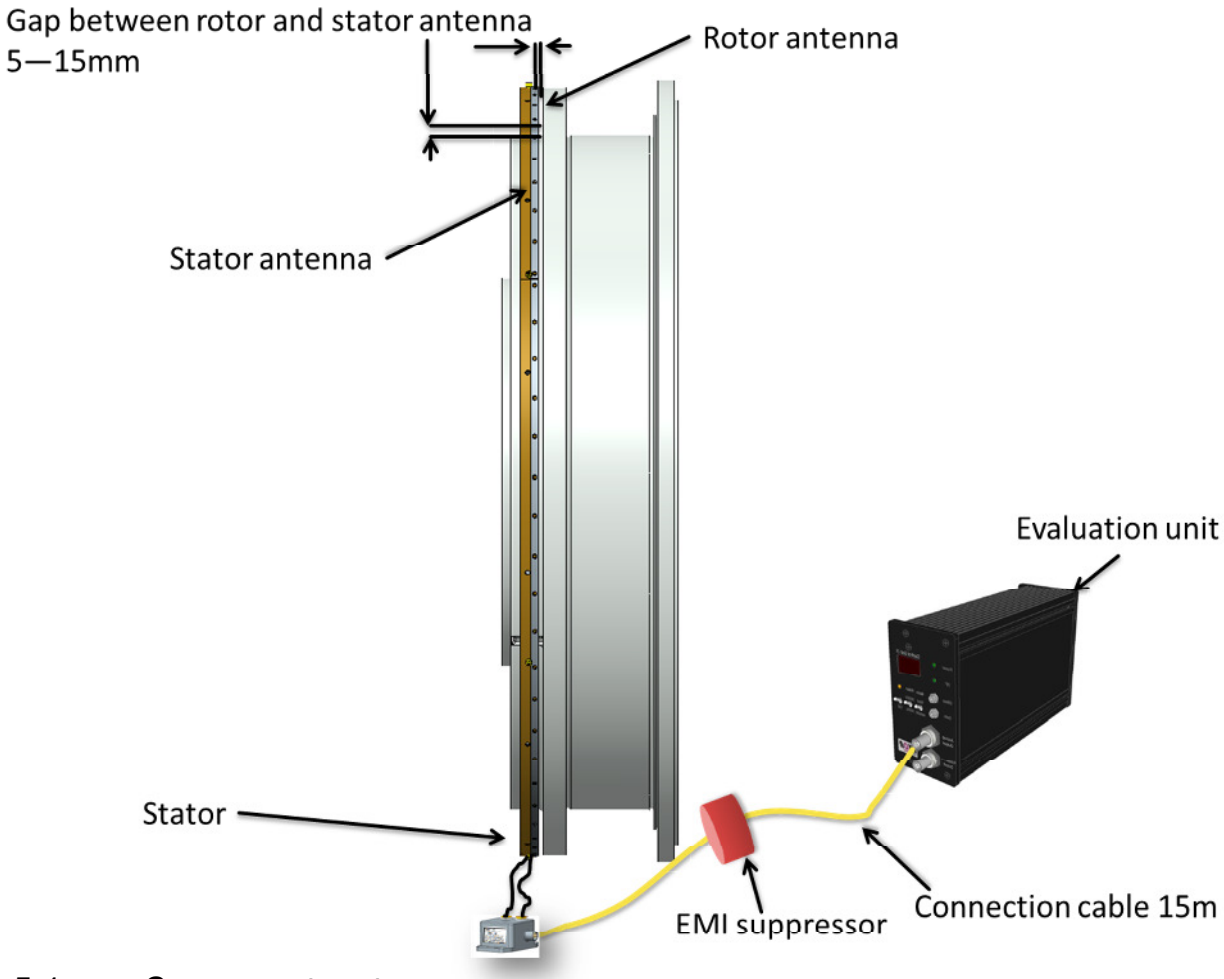

Fig 5.4: Component parts

Important

- Do not bend the connection cable
- Do not shorten or stretch the connection cable
- Do not guide the cable close to energy- or power circuit lines
- The stator antenna has to be mounted directly above the rotor antenna
- The stator antenna has to be mounted in the middle of the adjustment range of the rotor antenna
- The stator antenna must not touch the rotor antenna

⚠ CAUTION

- At all mounting- dismounting or repair operations, switch of the power supply of the system.
- Connectors must not be under electric tension while it will be connected or disconnected

5.7.1 Measuring setup

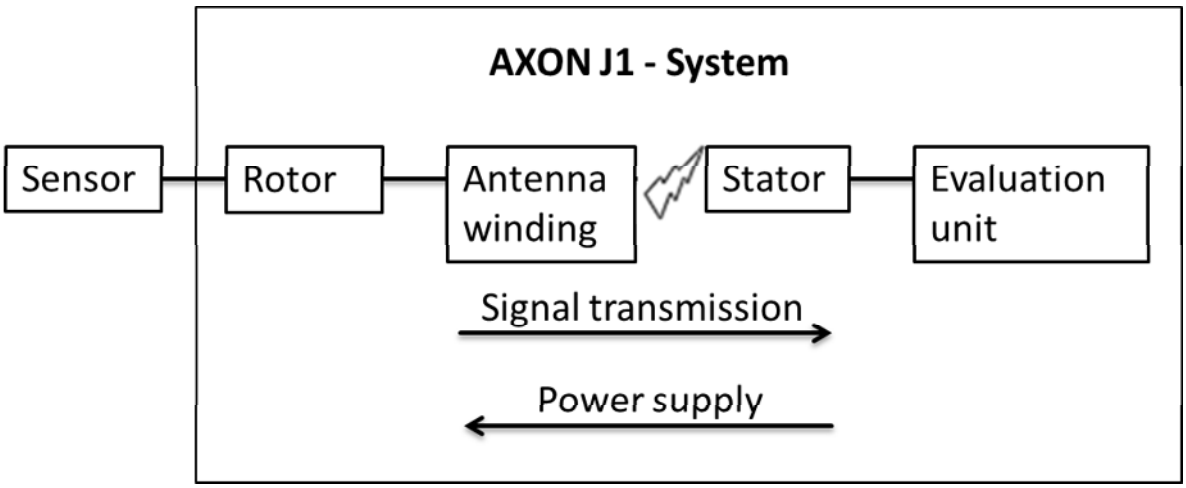

Fig 5.5: Block diagram

5.7.2 Instruction for installation

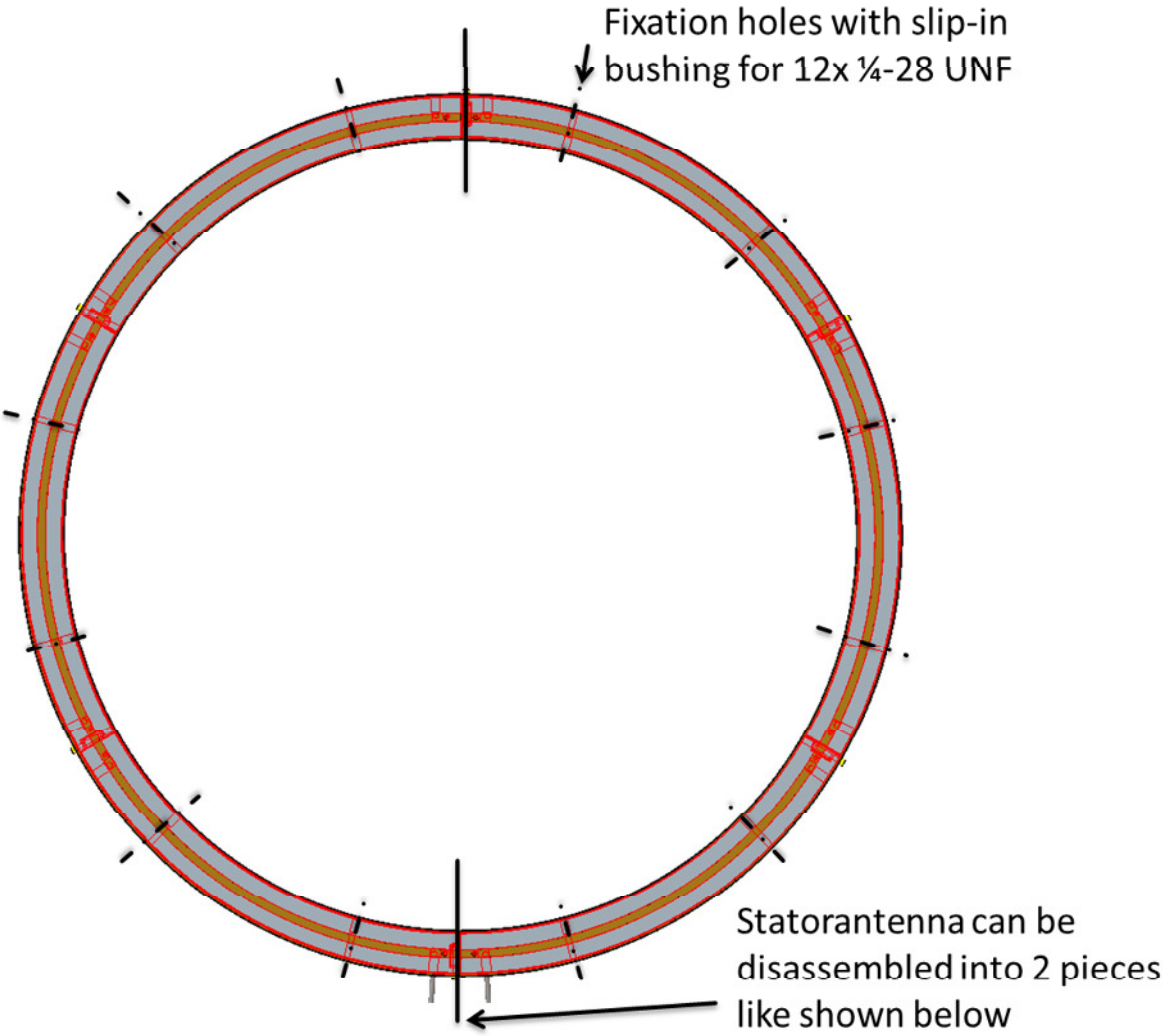

Fig 5.6: Stator antenna supports

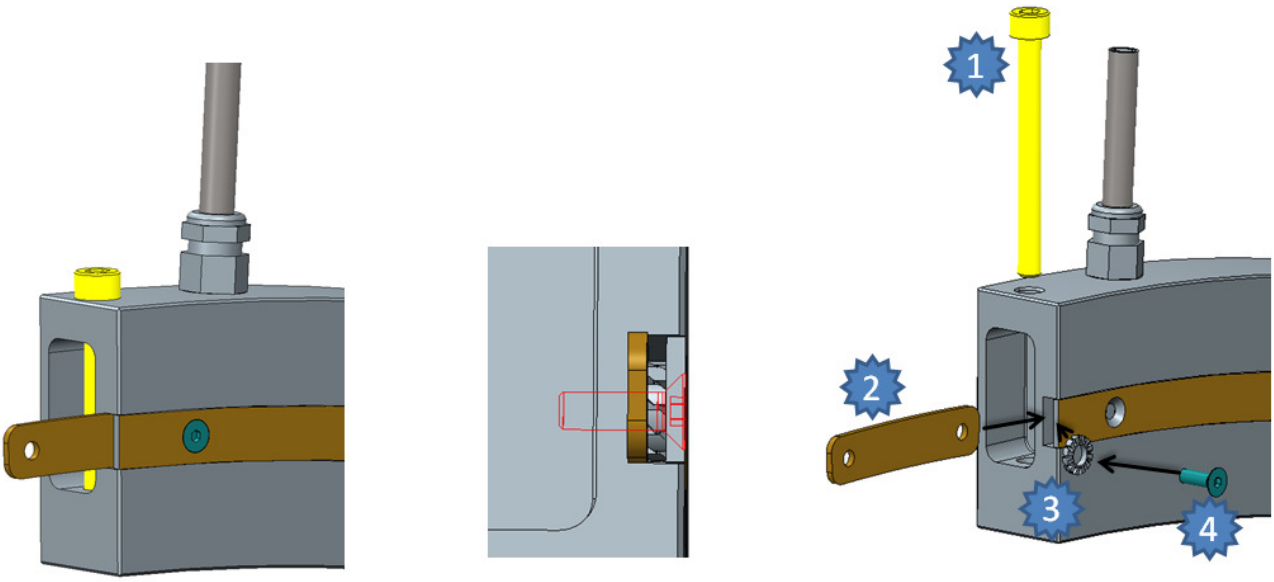

Fig 5.7: Disassembling the stator antenna

5.7.3 Calibration signal

The torque transducer delivers an electrical shunt signal that can be activated by using switch (6) on the evaluation unit. See also 5.7.5

The transducer should not be under load when the shunt signal is being measured, as the shunt signal is mixed additively.

5.7.4 Stator antenna

The cable connection between stator antenna and evaluation unit is realized with a coaxial cable.

NOTE

- When you connect the stator antenna, please take regard to a stress relief
- Please tighten the connection screws with the appropriate tightening torque.
- Use thread locker (medium strength, e.g. LOCTITE No. 242) to glue the screws into the counter thread to exclude pre-stressing loss due to screw slackening.
- Allign the stator like shown in the picture below

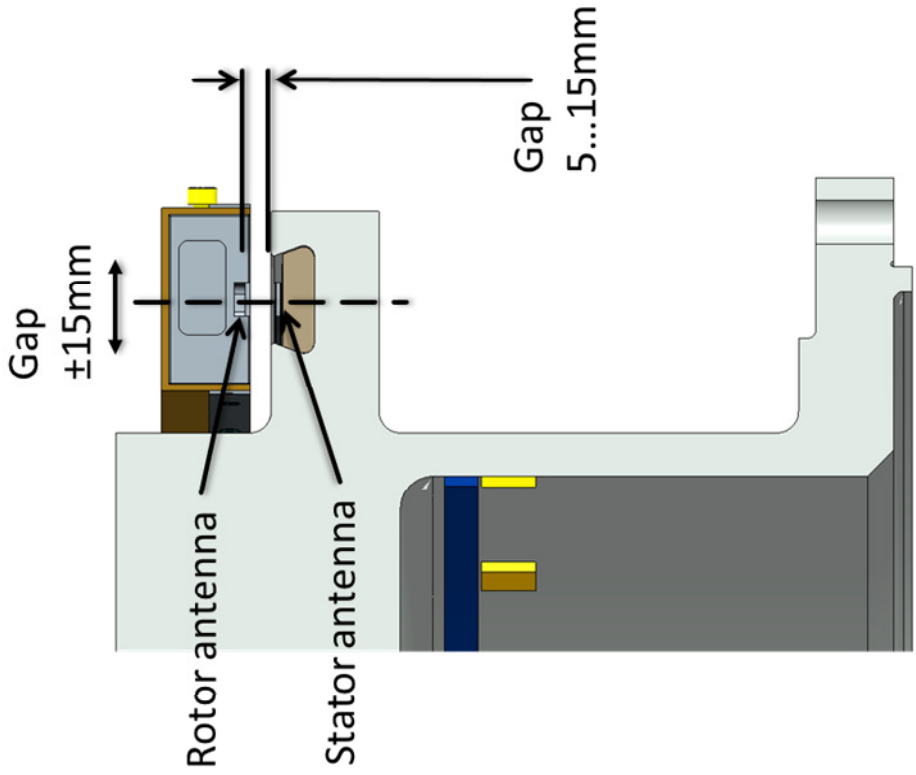

Fig 5.8: Axial Alignment

5.7.5 Evaluation unit

Fig 5.9: Control unit

Technical details

Supply voltage	**9…36 VDC**
Max. power consumption	**30 VA**
Signal bandwidth	**Switchable 1000 Hz / 100Hz**
Voltage output	**±10 V**
Frequency output	**5 … 15 kHz**
Signal-to-noise ratio	**63dB (1000Hz) / 83dB (100Hz)**
Signal transit time	**450µs**
Wireless shunt calibration	**Key button at control unit**
Protection class	**IP40**
Weight	**700 gramm**
Temperature range	**-10 … +70 °C**

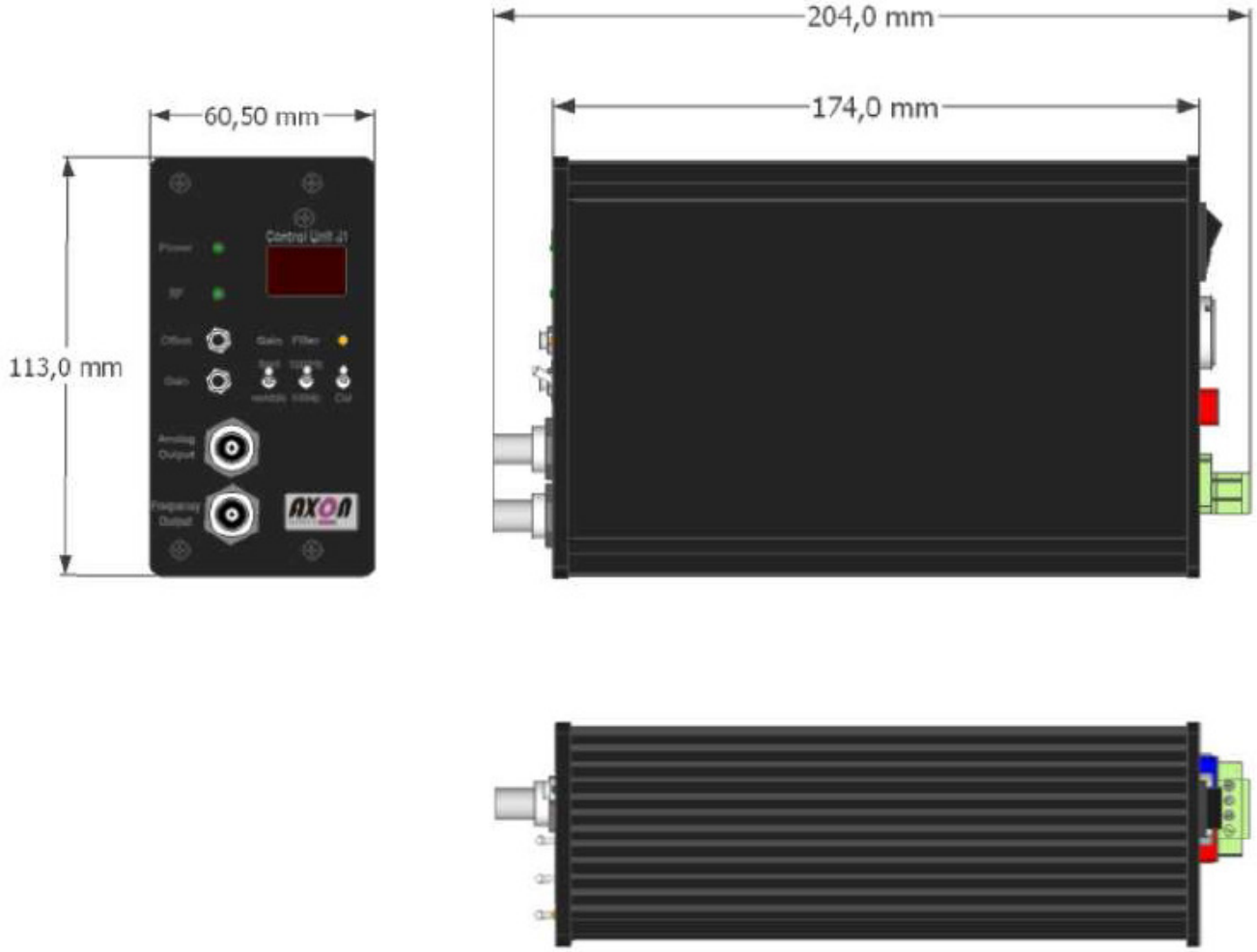

Fig 5.10: Dimensions of the control unit

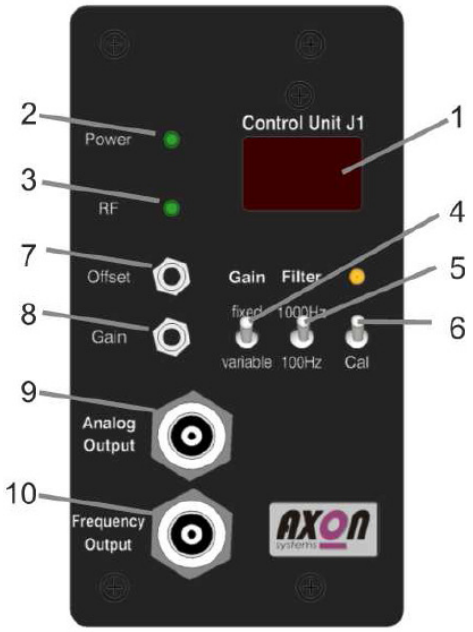

Fig 5.11: Functions of the control unit front side

1 Display
Information of Voltage or Current output. The display is only for monitoring purposes, but doesn't provide the accuracy of an measuring device.

2 Power on
The LED signalizes the ON / OFF status of the device

3 RF Level
The LED shows a sufficient signal level for data transmission from rotor to stator.

4 Gain switch (see also (8)
Switch for activating the adjustment functions of (8). Therefore the switch must be set to "variable".
IMPORTANT: Characteristic values of calibrated transducers their validity loose in mode "variable". In mode "fixed" the potentiometer (8) is deactivated.

5 Filter switch
Switch for selecting the signal bandwidth.

6 Cal – function
Switch for activating the defined bridge detuning "Shunt Cal". The LED lights for approx. 5sec after activation of the switch. After 5sec the measuring system returns self-dependent to operational mode.

7 Offset
Potentiometer to adjust the Offset between ±1V. This function only effects the voltage output, not the frequency output.

8 Gain
Potentiometer 6b to adjust the measurement signal output (nominal ±10V with factor 0,2…2,0). Switch (4) for activating the adjustment function of (8). Therefore the switch must be in mode "variable".

9 **Analog output**
Analog output signal (±10V)

10 Frequency output
Frequency output (10kHz ±5kHz, 5V)

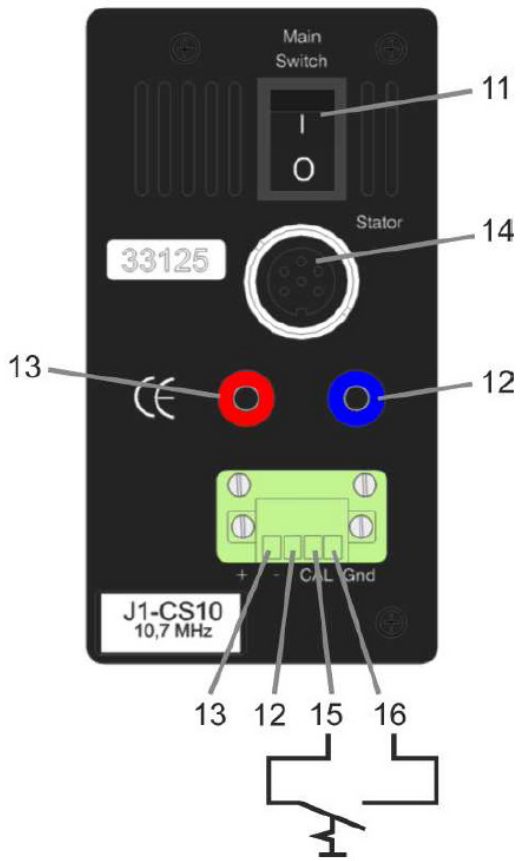

Fig 5.12: Functions of the control unit back side

11 Main Switch
ON / OFF switch
12 Power connection (-)
9 VDC … 36 VDC
13 Power connection (+)
9 VDC … 36 VDC
14 Stator connection
Connector for stator connection
15 Connector for external Cal- switch (alternative)
Cal function can be remote controlled by an external switch
16 GND connection (alternative)

6 Electrical connection

The product offered is a special assembly for stationary systems that is not available on the general market or a transducer for installation by system integrators or plant manufacturers. According to EMVG1 §12 paragraph 2 and Directive 2004/1008/EC article 13 paragraph 1 this product does not require an EC declaration of conformity nor the CE marking.
This product is intended exclusively for subsequent processing by companies or persons that are experts in the field of electromagnetic compatibility (EMC). Relevant EMC protection requirements relating to the product offered are met when the following Installation notes are observed and implemented.

However you have to install the shield of the connection cable at the shielded housing of the electronics, to achieve the EMC-protection of the measuring chain. Make sure that the transducer and shielding are connected extensively to ground.

6.1 Use of EMI suppressor

To suppress high frequencies a EMI suppressor on the cable between rotor and stator has to be used. Use at least 3 loops of the cable.

Fastening must be done in an area not subject to mechanical loads (i.e. no unwanted vibrations, etc.) using cable ties fit for the specific application.

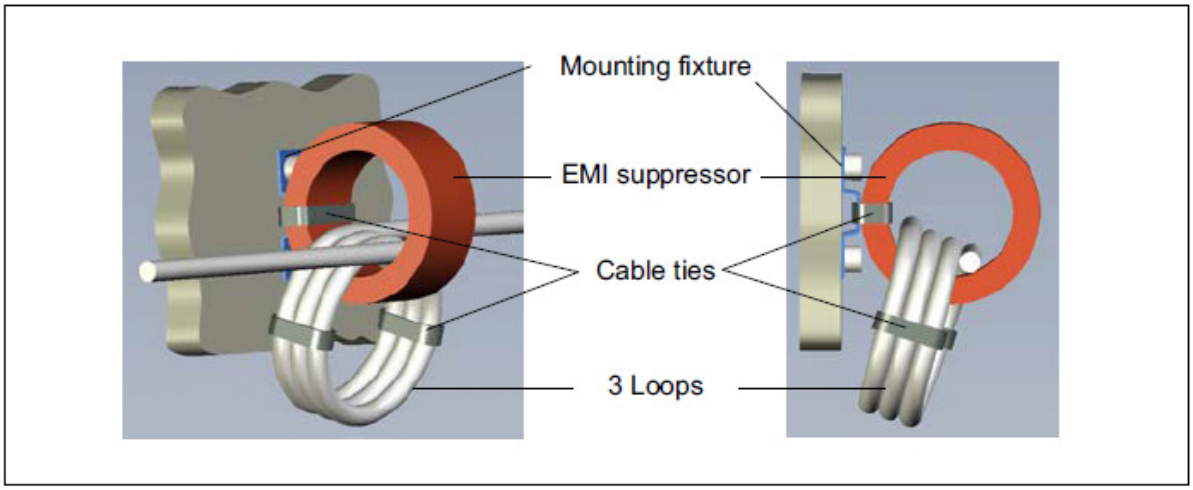

Fig 6.1: Installation example EMI suppressor

Information

Consider longer cable of approximately 40cm due to the installation of the EMI suppressor. The max. distance of EMI suppressor to connector is 500mm.

If the EMI suppressor has to be removed for any purpose (e.g. for maintenance), it must be replaced on the cable. Use only EMI suppressor of the correct type.

Type: Vitroperm R

Model No.: T60006-22063W517

Size: external diameter x internal diameter x height = 63 x 50 x 25

Important

The use of the EMI suppressor on the power cable is mandatory to ensure compliance with FCC regulations.

6.2 Connector pin assignment

BNC Connectors for voltage and frequency output

NOTE

This torque flange is only intended for operation with a DC supply voltage. They must not be connected to older HBM amplifiers with square-wave excitation. *This could destroy the connection board resistances or cause other faults in the amplifiers.*

6.3 Supply voltage

The transducer must be operated with a separated extra-low voltage (supply voltage 9…36 VDC).

7 Functional testing

You can check the functionality of the rotor and the stator from the LEDs on the evaluation unit.

- **It is not allowed to extend or reduce the length of the connection cable between rotor and evaluation unit!!!**
- Don’t lay cable parallel to high voltage and control cable. If this is not avoidable, please let a minimum gap of 50cm and lay the cable inside a steel tube.
- Avoid transformer, motor, gate, thyristor circuits and similarly leakage fields.

Important

- Check the calibration signal specified on the type label or test protocol.
- To obtain stable conditions, the measurement should be started or the calibration signal should be activated only once the transducer has been warming up for 15 minutes.

8 Maintenance

The torque transducer is maintenance-free.

9 Dimensions of the stator antenna

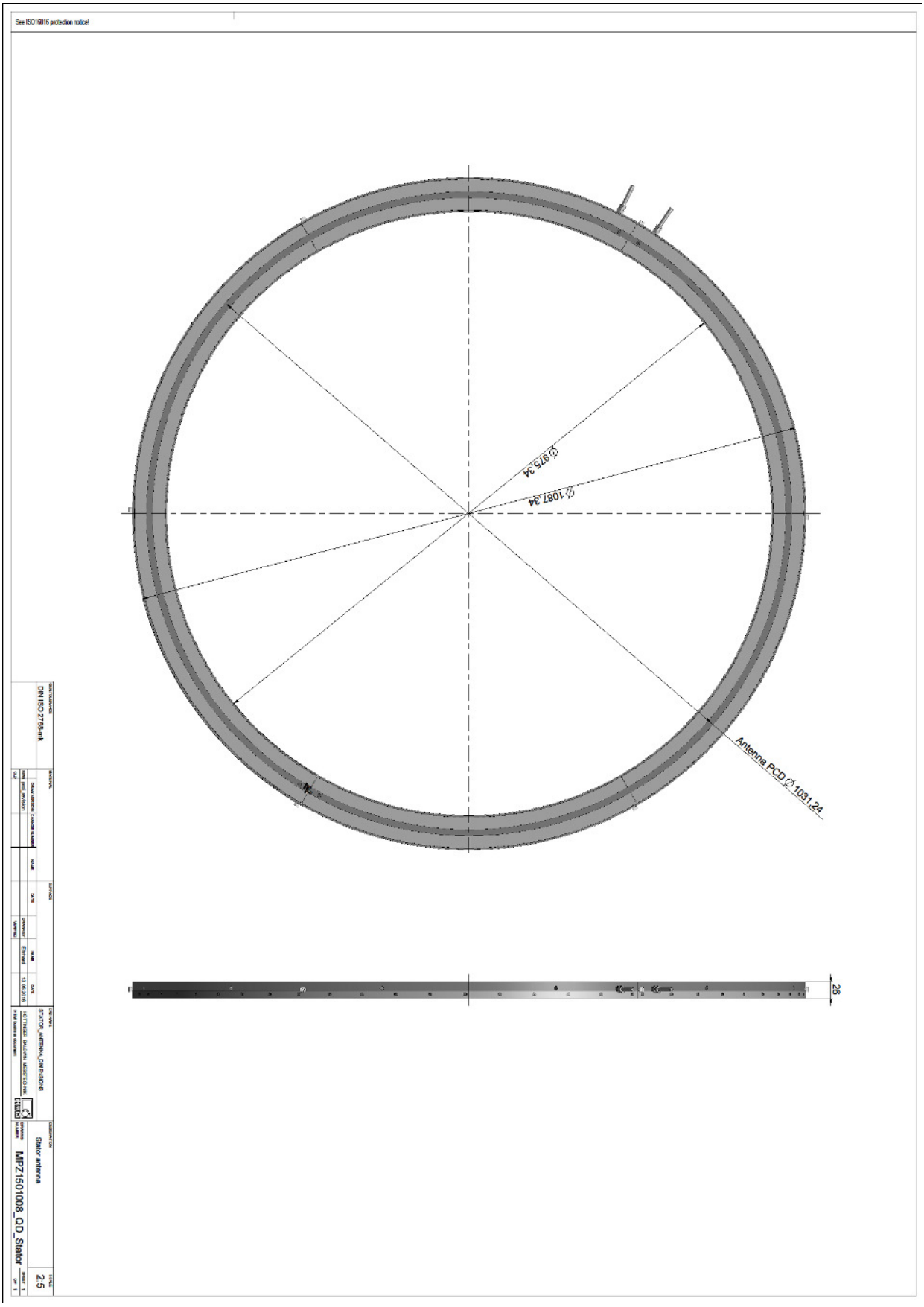

10 Dimensions of the rotor antenna

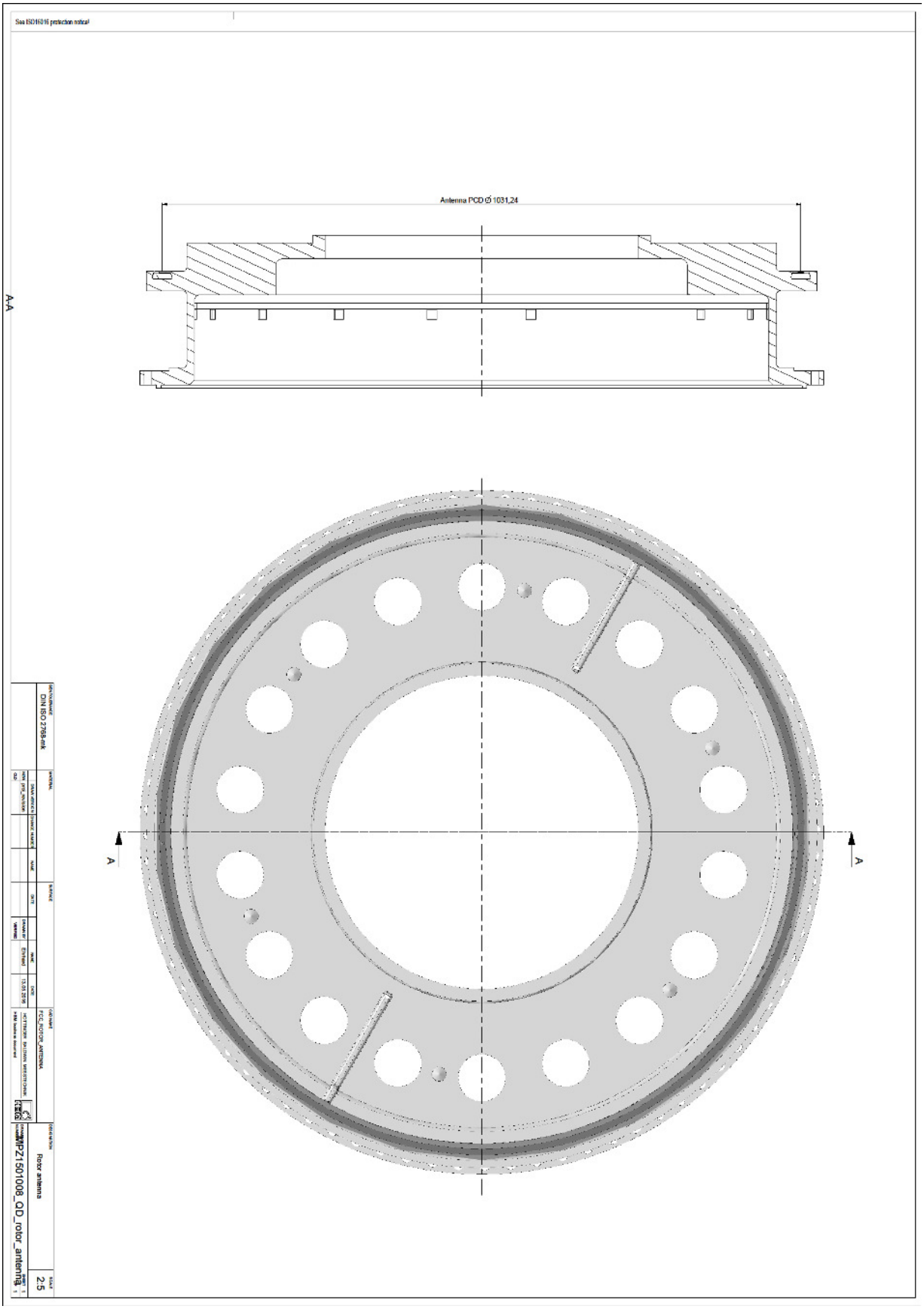

11 Declaration of conformity

Hottinger Baldwin Messtechnik GmbH.
Subject to modifications. All product descriptions are for general information only. They are not to be understood as a guarantee of quality or durability.

Hottinger Baldwin Messtechnik GmbH.
Änderungen vorbehalten. Alle Angaben beschreiben unsere Produkte in allgemeiner Form. Sie stellen keine Beschaffenheits- oder Haltbarkeitsgarantie im Sinne des §443 BGB dar.

Hottinger Baldwin Messtechnik GmbH
Im Tiefen See 45 • 64293 Darmstadt • Germany
Tel. +49 6151 803-0 • Fax: +49 6151 803-9100
Email: info@hbm.com • www.hbm.com

measure and predict with confidence