YAMAHA

⚠ **READ THIS MANUAL CAREFULLY!**
It contains important safety information.

Drive Unit
Display Unit
Battery Pack
Battery Charger

ORIGINAL INSTRUCTIONS

TABLE OF CONTENTS

INTRODUCTION 1

LOCATION OF THE WARNING AND SPECIFICATION LABELS 4

DESCRIPTION 6

E-BIKE SYSTEMS 7

SAFETY INFORMATION 10

INSTRUMENT AND CONTROL FUNCTIONS 13

BATTERY PACK AND CHARGING PROCEDURE 33

CHECKING THE RESIDUAL BATTERY CAPACITY 41

PRE-OPERATION CHECK 43

CLEANING AND STORAGE 44

TRANSPORT 46

CONSUMER INFORMATION 47

TROUBLESHOOTING 48

SPECIFICATIONS 54

INTRODUCTION

These original instructions have been prepared for your Drive Unit, display unit, battery pack and battery charger.

FAILURE TO FOLLOW THE WARNINGS CONTAINED IN THIS MANUAL CAN RESULT IN SERIOUS INJURY OR DEATH.
Particularly important information is distinguished in this manual by the following notations:

⚠	**This is the safety alert symbol. It is used to alert you to potential personal injury hazards. Obey all safety messages that follow this symbol to avoid possible injury or death.**
⚠ **WARNING**	**A WARNING indicates a hazardous situation which, if not avoided, could result in death or serious injury.**
NOTICE	**A NOTICE indicates special precautions that must be taken to avoid damage to the vehicle or other property.**
TIP	A TIP provides key information to make procedures easier or clearer.

⃠ **Indicates prohibited items that you must not do for safety reasons.**

* Product and specifications are subject to change without notice.

EPACK Manual (2017)_EU_Eng.indd 1 2016/08/30 11:13:40

INTRODUCTION

The Bluetooth® word mark and logos are registered trademarks owned by the Bluetooth SIG, Inc. and any use of such marks by YAMAHA MOTOR CO., LTD. is under license.

EPACK Manual (2017)_EU_Eng.indd 2 2016/08/30 11:13:40

INTRODUCTION

Please check your local riding laws and regulations before operating this e-Bike Systems bicycle.

Drive Unit, Display Unit,
Battery Pack, Battery Charger
ORIGINAL INSTRUCTIONS
©2016 by Yamaha Motor Co., Ltd.
1st edition, September 2016
All rights reserved.
Any reprinting or unauthorized use
without the written permission of
Yamaha Motor Co., Ltd.
is expressly prohibited.
Printed in Japan

EPACK Manual (2017)_EU_Eng.indd 3 2016/08/30 11:13:40

LOCATION OF THE WARNING AND SPECIFICATION LABELS

Read and understand all of the labels on your battery pack and battery charger. These labels contain important information for safe and proper operation. Never remove any labels from your battery pack and battery charger:

Battery pack

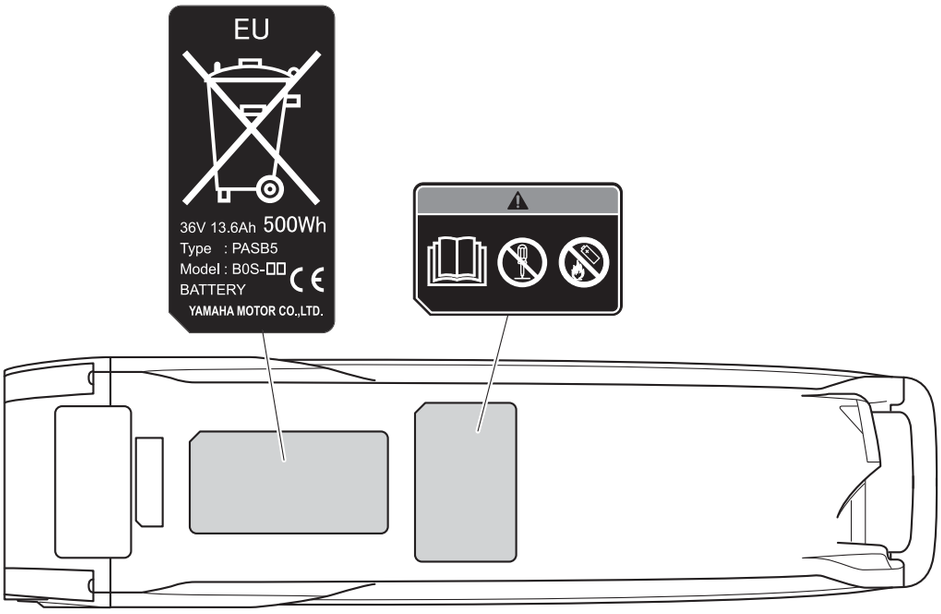

EPACK Manual (2017)_EU_Eng.indd 4 2016/08/30 11:13:40

LOCATION OF THE WARNING AND SPECIFICATION LABELS

Battery charger

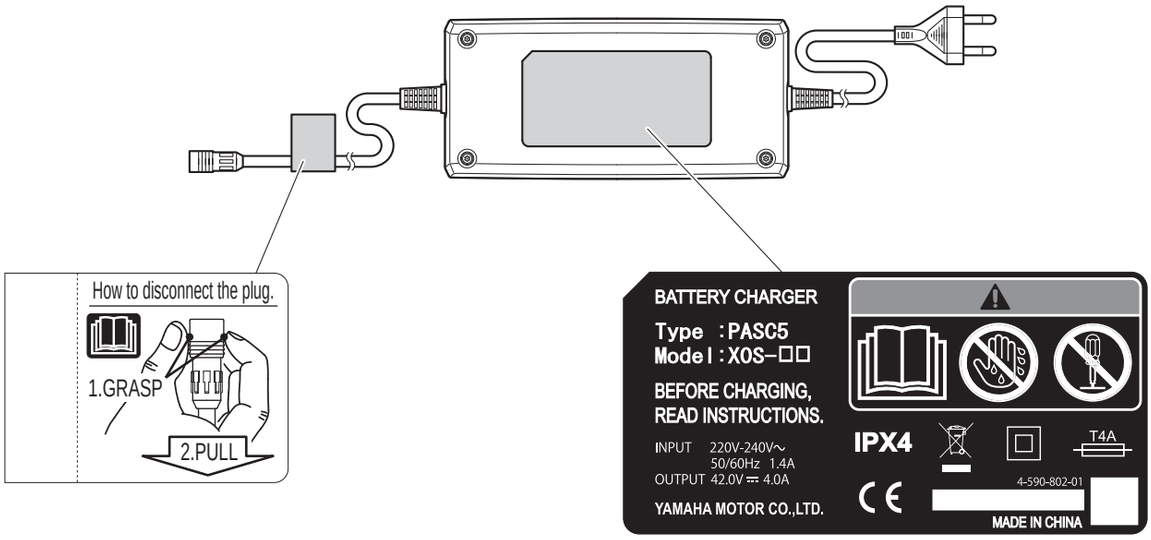

Familiarize yourself with the following pictograms and read the explanatory text, then make sure to check the pictograms that apply to your model.

	Read the Owner's manual
	Do not dispose of in a fire
	Do not disassemble
	Do not use with wet hands

EPACK Manual (2017)_EU_Eng.indd 5 2016/08/30 11:13:40

DESCRIPTION

1

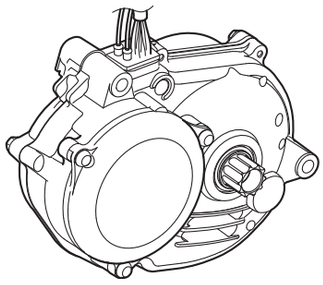

2

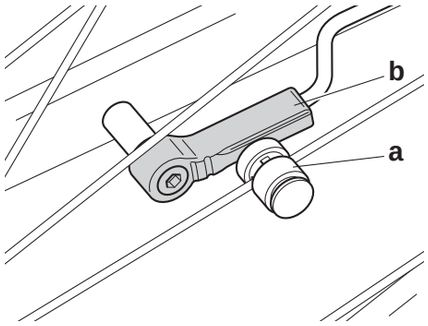

3

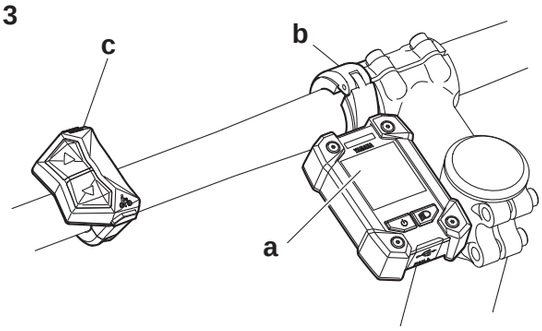

4

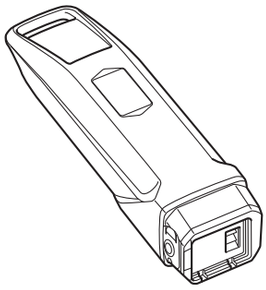

5

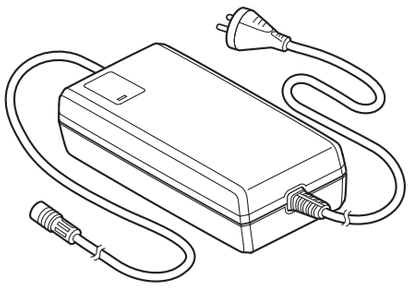

1. Drive Unit
2. Speed sensor set
   a) Magnet sensor spoke type
   b) Pick up
3. Display unit
   a) Display
   b) Clamp
   c) Switch
4. Battery pack (400 Wh/500 Wh)
5. Battery charger

EPACK Manual (2017)_EU_Eng.indd 6 2016/08/30 11:13:40

E-BIKE SYSTEMS

The e-Bike Systems are designed to give you the optimal amount of power assist.

It assists you within a standard range based on factors such as your pedaling strength, bicycle speed, and current gear.
The e-Bike Systems do not assist in the following situations:

- When the display unit's power is off.
- When you are moving 25 km/h or faster.
- When you are not pedaling and the pushing assist switch is released.
- When there is no residual battery capacity.
- When the automatic power off function* is operating.
  * Power turns off automatically when you do not use the e-Bike Systems for 5 minutes.
- When the assist mode is set to Off mode.

EPACK Manual (2017)_EU_Eng.indd 7 2016/08/30 11:13:40

E-BIKE SYSTEMS

Multiple power assist modes are available.

Choose from Extra Power mode, High-Performance mode, Standard mode, Eco mode, +Eco mode and Off mode to suit your riding conditions.
See “Displaying and switching the assist mode” for information on switching between assist modes.

* This illustration is for reference purposes only.
Actual performance may vary depending on road conditions, wind, and other factors.

Extra Power mode	Use when climbing rough terrain.

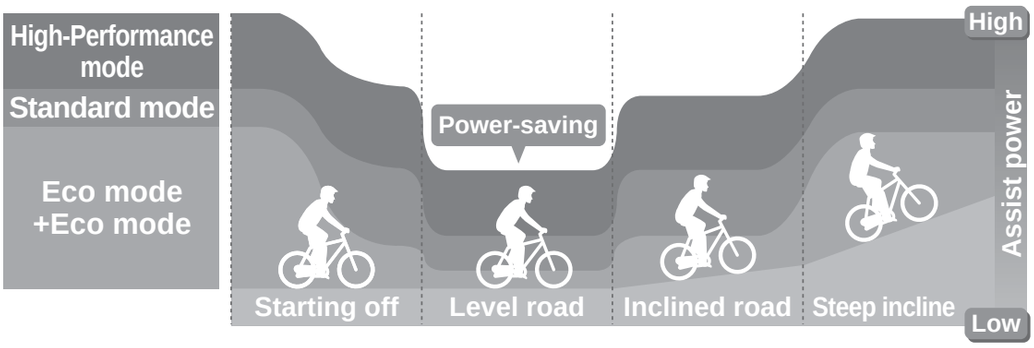

* This illustration is for reference purposes only.
Actual performance may vary depending on road conditions, wind, and other factors.

High-Performance mode	Use when you want to ride more comfortably, such as when climbing a steep hill.
Standard mode	Use when riding on flat roads or climbing gentle hills.
Eco mode +Eco mode	Use when you want to ride as far as possible.
Off mode	Use when you want to ride without power assist. You can still use the other display unit functions.

EPACK Manual (2017)_EU_Eng.indd 8 2016/08/30 11:13:40

E-BIKE SYSTEMS

Conditions that could decrease remaining assist distance

The remaining assist distance will decrease when riding in the following conditions:

- Frequent starts and stops
- Numerous steep inclines
- Poor road surface conditions
- When carrying heavy loads
- When riding together with children
- Riding into a strong head wind
- Low air temperature
- Worn-out battery pack
- When using the headlight (applies only to models equipped with lights powered by the battery pack)
- Remaining assist distance will also decrease if the bicycle is not maintained properly.

Examples of inadequate maintenance that could decrease remaining assist distance:

- Low tire pressure
- Chain not turning smoothly
- Brake engaged constantly

EPACK Manual (2017)_EU_Eng.indd 9 2016/08/30 11:13:40

SAFETY INFORMATION

Never use this battery charger to charge other electrical appliances.

Do not use any other charger or charging method to recharge the special batteries. Using any other charger could result in fire, explosion, or damage the batteries.

This battery charger can be used by children aged from 8 years and above and persons with reduced physical, sensory or mental capabilities or lack of experience and knowledge if they have been given supervision or instruction concerning use of the battery charger in a safe way and understand the hazards involved. Children shall not play with the battery charger. Cleaning and user maintenance shall not be made by children without supervision.

Although the battery charger is waterproof, never allow it to become immersed in water or other fluids. In addition, never use the battery charger if the terminals are wet.

Never handle the power plug, charge plug or touch the charger contacts with wet hands. This could result in electric shock.

Do not touch charger contacts with metallic objects. Do not allow foreign material to cause short circuit of the contacts. This could result in electric shock, fire, or damage the battery charger.

Periodically remove dust from the power plug. Dampness or other issues could reduce the effectiveness of the insulation, resulting in fire.

Never disassemble or modify the battery charger. This could result in fire or electric shock.

Do not use with a power strip or extension cord. Using a power strip or similar methods may exceed rated current and can result in fire.

Do not use with the cable tied or rolled up, and do not store with the cable wrapped around the charger main body. Cable damage can result in fire or electric shock.

Firmly insert the power plug and the charging plug into the socket. Failure to insert the power plug and the charging plug completely can result in fire caused by electric shock or overheating.

Do not use the battery charger near flammable material or gas. This could result in fire or explosion.

Never cover the battery charger or place other objects on top of it while charging. This could result in internal overheating leading to fire.

Do not drop the battery charger or expose it to strong impacts. Otherwise, it could cause a fire or electric shock.

Store the battery and battery charger out of reach of children.

Do not touch the battery pack or battery charger while it is charging. As the battery pack or battery charger reaches 40–70 °C during charging, touching it could result in low-temperature burns.

EPACK Manual (2017)_EU_Eng.indd 10 2016/08/30 11:13:40

SAFETY INFORMATION

Do not use if the battery pack case is damaged, cracked, or if you smell any unusual odors. Leaking battery fluid can cause serious injury.

Do not short the contacts of the battery pack. Doing so could cause the battery pack to become hot or catch fire, resulting in serious injury or property damage.

Do not disassemble or modify the battery pack. Doing so could cause the battery pack to become hot or catch fire, resulting in serious injury or property damage.

If the power cable is damaged, stop using the battery charger and have it inspected at an authorized dealer.

Do not turn the pedals or move the bicycle while the battery charger is connected. Doing so could cause the power cable to become tangled in the pedals, resulting in damage to the battery charger, power cable, and/or plug.

Handle the power cable with care. Connecting the battery charger from indoors while the bicycle is outdoors could result in the power cable becoming pinched and damaged in a doorway or window.

Do not run over the power cable or plug with the wheels of the bicycle. Doing so could result in damage to the power cable or plug.

Do not drop the battery pack or subject it to impact. Doing so could cause the battery pack to become hot or catch fire, resulting in serious injury or property damage.

Do not dispose of the battery pack in a fire or expose it to a heat source. Doing so could cause fire, or explosion, resulting in serious injury or property damage.

Do not modify or disassemble the e-Bike Systems. Do not install anything other than genuine parts and accessories. Doing so could result in product damage, malfunction, or increase your risk of injury.

When stopped, be sure to apply the front and rear brakes and keep both feet on the ground. Placing one's foot on the pedal when stopped may unintentionally engage the power assist function, which could result in loss of control and serious injury.

Do not ride the bicycle if there is any irregularity with the battery pack or e-Bike Systems. Doing so could lead to loss of control and serious injury.

Be sure to check the residual battery capacity before riding at night. The headlight powered by the battery pack will turn off soon after the residual battery capacity has decreased to where power assisted riding is no longer possible. Riding without an operating headlight can increase your risk of injury.

Do not start off by running with one foot on a pedal and one foot on the ground and then mounting the bicycle after it has reached a certain speed. Doing so could result in loss of control or serious injury. Be sure to start riding only after you are seated properly on the bicycle seat.

Do not press the pushing assist switch if the rear tire is off the ground. Otherwise, the tire will turn at high speed in the air and you could be injured.

EPACK Manual (2017)_EU_Eng.indd 11 2016/08/30 11:13:40

SAFETY INFORMATION

Do not use the wireless function with Bluetooth low energy technology in areas such as hospitals or medical institutions where use of electronic equipment or wireless equipment is prohibited. Otherwise, this could affect the medical equipment, etc. and cause an accident.

When using the wireless function with Bluetooth low energy technology, keep the display at a safe distance from heart pacemakers in use. Otherwise, the radio waves could affect the heart pacemaker function.

Do not use the wireless function with Bluetooth low energy technology near automatic control equipment such as automatic doors, fire alarms, etc. Otherwise, the radio waves could affect the equipment and cause an accident through possible malfunction or unintentional operation.

EPACK Manual (2017)_EU_Eng.indd 12 2016/08/30 11:13:40

INSTRUMENT AND CONTROL FUNCTIONS

Display unit

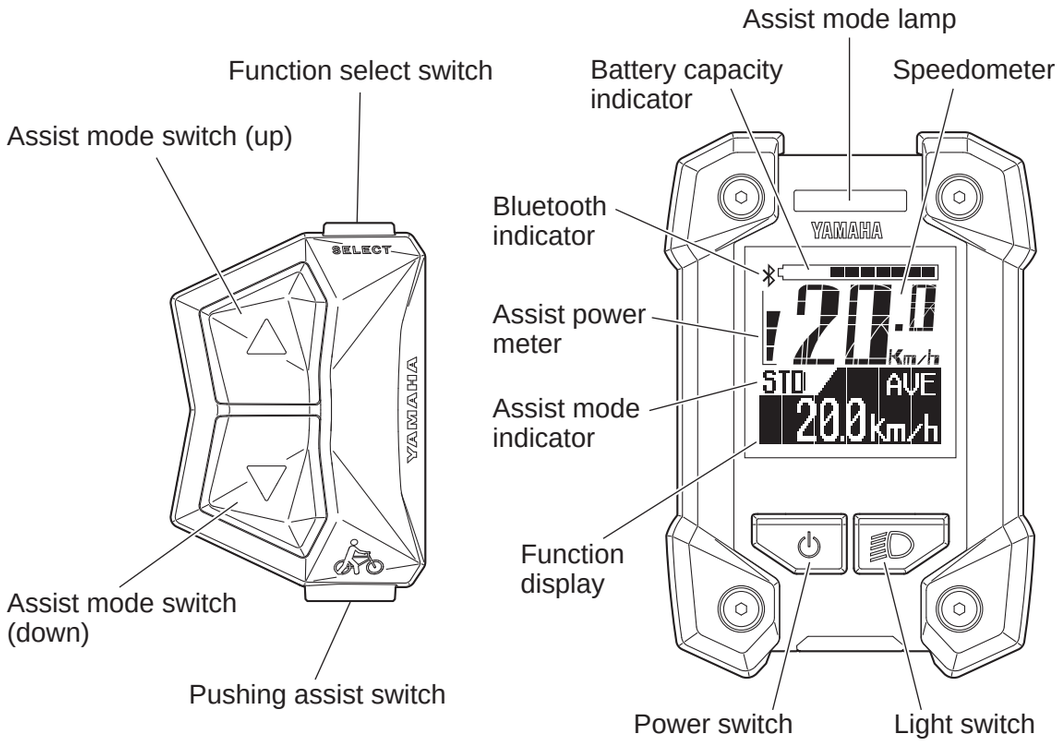

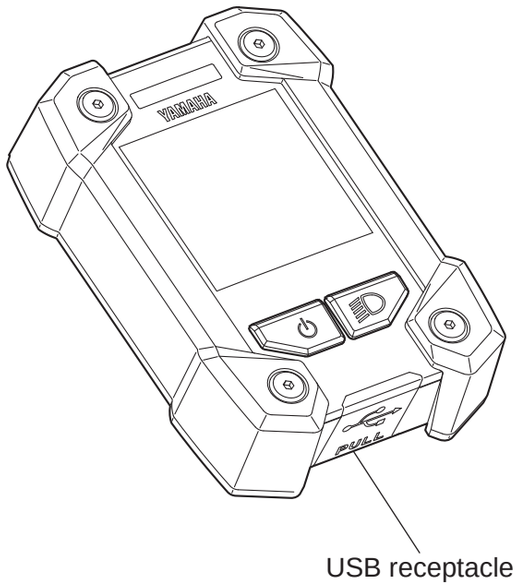

EPACK Manual (2017)_EU_Eng.indd 13 2016/08/30 11:13:41

INSTRUMENT AND CONTROL FUNCTIONS

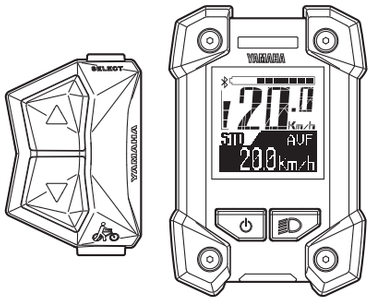

Display unit

The display unit offers the following operations and information displays.

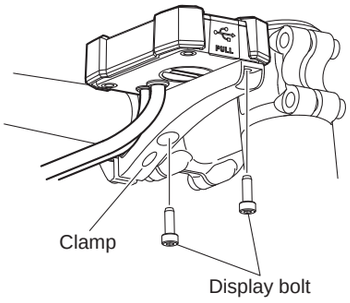

○ Installing the battery

The display needs to be removed and installed for changing the battery.

- Remove the two bolts on back side of the clamp, and then remove the display.
- When installing the display, tighten the two display bolts from the back side of the clamp.

⚠ WARNING

Tighten the display bolts to 1.5–2.5 N·m. During riding, vibration could cause the bolts to come loose with the risk that the display may fall off.

TIP

- The clamp and display might be installed on the right side of the stem.
- For models without this clamp, the above note does not apply.

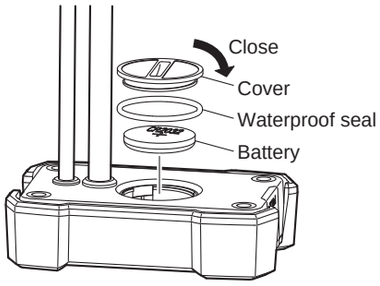

○ Battery

Check if the rated battery (CR2032) is installed in the rear of the display.
If a battery is not installed, or if there is not sufficient battery power remaining, install a new battery.
To adjust the time and set the units for distance and speed, see “Stopwatch and settings”.

TIP

- Make sure that the waterproof seal is installed correctly.
- Use a new type CR2032 button cell battery (sold separately).

EPACK Manual (2017)_EU_Eng.indd 14 2016/08/30 11:13:41

INSTRUMENT AND CONTROL FUNCTIONS

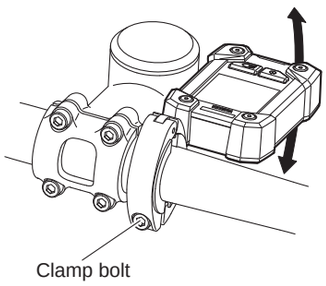

○ Adjusting the display angle

Adjust the display angle by loosening the clamp bolt. The angle depends on each rider.
After adjustment, tighten the clamp bolt.

⚠ WARNING

Tighten the clamp bolt to 3.0–4.5 N·m. During riding, vibration could cause the clamp bolt to come loose with the risk that the clamp may fall off.

TIP

- The clamp and display might be installed on the right side of the stem.
- For models without this clamp, the above note does not apply.

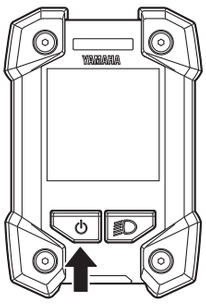

○ Power “On/Off”

Each time you press the power switch, the power switches between “On” and “Off”.
When you turn on the power, the animation will be displayed.
After that, the battery capacity indicator, speedometer, assist power meter, Bluetooth indicator, the function display, and “STD” of assist mode indicator are displayed.

TIP

- When you turn on the power, the assist mode is automatically set to Standard mode.
- Keep your feet off the pedals when turning on the display unit. Also, do not start riding immediately after turning on the display unit. Doing so could weaken the assist power. (Weak assist power in either of these cases is not a malfunction.) If you did either of the above by accident, remove your feet from the pedals, turn on the power again, and wait a moment (approximately two seconds) before starting to ride.

EPACK Manual (2017)_EU_Eng.indd 15 2016/08/30 11:13:41

INSTRUMENT AND CONTROL FUNCTIONS

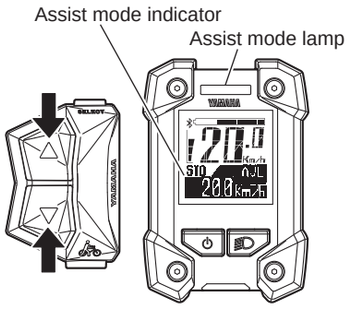

Assist mode	Assist mode indicator	Assist mode lamp
EXPW	EXPW	Yellow
▲▼		
HIGH	HIGH	Blue
▲▼		
STD	STD	Blue
▲▼		
ECO	ECO	Green
▲▼		
+ECO	+ECO	Green
▲▼		
OFF	OFF	Hide

○ Displaying and switching the assist mode

You can select the assist mode by using the assist mode switches (up & down).
The selected assist mode is displayed by the assist mode indicator and assist mode lamp color.

- When you press the assist mode switch (up), the mode changes from “OFF” to “+ECO” to “ECO” to “STD” to “HIGH”, or from “HIGH” to “EXPW”.
- When you press the assist mode switch (down), the mode changes from “EXPW” to “HIGH”, or from “HIGH” to “STD”, or “STD” to “ECO”, or “ECO” to “+ECO” or “+ECO” to “OFF”.

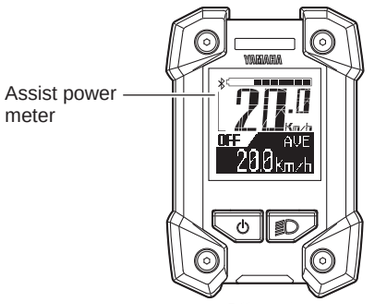

TIP

- Further pressing of the assist mode switch will not cycle the assist mode selections.
- In the Off mode, the assist power meter are not displayed.
- You can keep the assist mode lamp unlit.
  For more information, see “Stopwatch and settings”.

EPACK Manual (2017)_EU_Eng.indd 16 2016/08/30 11:13:43

INSTRUMENT AND CONTROL FUNCTIONS

○ Speedometer

The speedometer displays your bicycle speed (in kilometer per hour or mile per hour). To select the km/mile, see “Stopwatch and settings”.

TIP

If your bicycle speed is less than 2.0 km/h or 1.2 MPH, the speedometer displays “0.0 km/h or 0.0 MPH”.

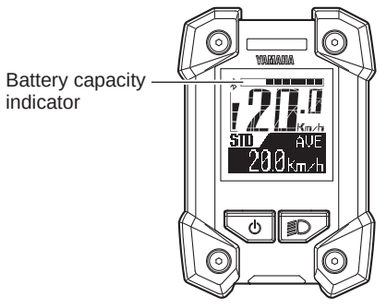

○ Battery capacity indicator

The battery capacity indicator displays an estimate of how much capacity is left in the battery on an 11-segment scale.

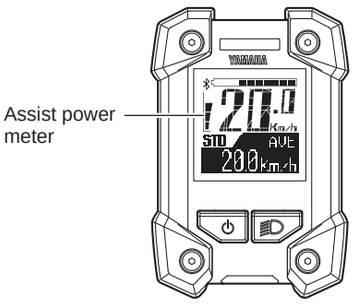

○ Assist power meter

The assist power meter displays an estimate of the assist power during riding on a 5-segment scale.
When the e-Bike Systems are not in operation, none of the segments of the assist power meter are displayed. When the e-Bike Systems are operating, as the assist power increases, the segments of the assist power meter are added one by one.

EPACK Manual (2017)_EU_Eng.indd 17 2016/08/30 11:13:43

INSTRUMENT AND CONTROL FUNCTIONS

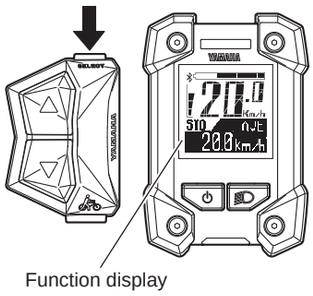

○ Function display

The function display can display the following functions.

- Odometer
- Trip meter
- Average bicycle speed
- Maximum bicycle speed
- Remaining assist distance
- Battery capacity (%)
- Cadence
- Clock

Push the function select switch, the display changes as follows:
Odometer → Trip meter → Average bicycle speed → Maximum bicycle speed → Remaining assist distance → Battery capacity (%) → Cadence → Clock → Odometer

You can select the items to be displayed.
For more information, see “Stopwatch and settings”.

You can reset the data for trip meter, average bicycle speed, and maximum bicycle speed.
For more information, see “Stopwatch and settings”.

● Odometer

This displays the total distance (in kilometers or miles) ridden while the power was on.
The odometer cannot be reset.

● Trip meter

This displays the total riding distance (in kilometers or miles) since it was last reset.
When you turn off the power, the data up to that point will remain in the display.
For the procedure of resetting the trip meter to measure a new distance travelled, see “Stopwatch and settings”.

● Average bicycle speed

This displays the average bicycle speed (in kilometers per hour or miles per hour) since it was last reset.
When you turn off the power, the data up to that point will remain in the display.
For the procedure of resetting the average bicycle speed, see “Stopwatch and settings”.

EPACK Manual (2017)_EU_Eng.indd 18 2016/08/30 11:13:44

INSTRUMENT AND CONTROL FUNCTIONS

● Maximum bicycle speed

This displays the maximum bicycle speed (in kilometers per hour or miles per hour) since it was last reset.
When you turn off the power, the data up to that point will remain in the display.
For the procedure of resetting the maximum bicycle speed, see “Stopwatch and settings”.

● Remaining assist distance

This displays an estimate of the distance (in kilometers or miles) that can be ridden with assist on the residual battery capacity of the battery installed. If you switch the assist mode when the remaining assist distance is displayed, the estimate of the distance that can be ridden with assist changes.
The remaining assist distance estimate cannot be reset.

TIP

- The remaining assist distance changes depending on the riding situation (hills, headwind, etc.) and as the battery runs down.
- If in “Off mode”, “- - - -” is displayed.

● Battery capacity (%)

This displays the power remaining in the battery.
The residual battery capacity display cannot be reset.

● Cadence

This displays your pedaling speed in revolutions per minute.
The pedaling cadence display cannot be reset.

TIP

If you pedal in backward, “0” is displayed.

● Clock

Displays the current time in 24 hour format. To adjust the time, see “Stopwatch and settings”.

EPACK Manual (2017)_EU_Eng.indd 19 2016/08/30 11:13:45

INSTRUMENT AND CONTROL FUNCTIONS

○ **Headlight “On/Off” (Applies only to models equipped with a headlight powered by the battery pack. The taillight, which is powered by the battery pack, is switched on/off with the headlight.)**

Each time you press the light switch, the headlight switches between “On” and “Off”.

EPACK Manual (2017)_EU_Eng.indd 20 2016/08/30 11:13:45

INSTRUMENT AND CONTROL FUNCTIONS

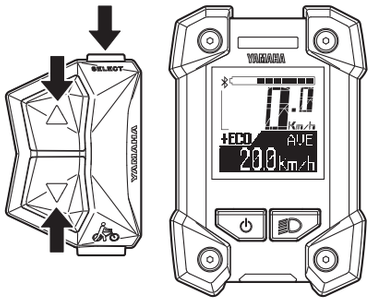

Main riding display

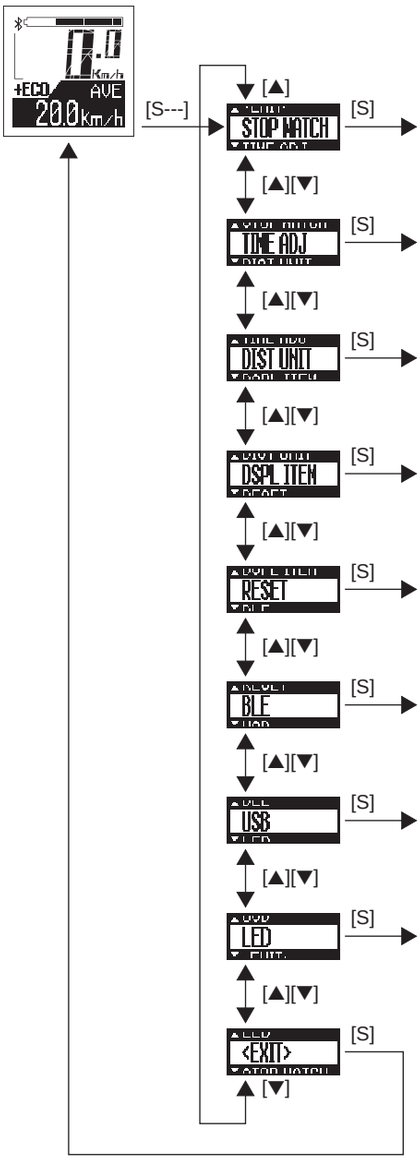

○ Stopwatch and settings

The display enables the following.

- STOPWATCH
  Stopwatch function
- TIME ADJ (TIME ADJUST)
  Clock setting
- DIST UNIT (DISTANCE UNIT)
  km/mile setting
- DSPL ITEM (DISPLAY ITEM)
  Sets the items to be displayed in the function display during normal riding.
- RESET
  Resets the values of the trip meter, average bicycle speed, and maximum bicycle speed.
- BLE (Bluetooth low energy technology)
  Switches the profiles and turns off the wireless function.
- USB
  Switches the USB receptacle between a power supply port and a wired communication port.
- LED
  Changes between lighting the assist mode lamp and keeping the assist mode lamp unlit.

1. Press the function select switch for 2 seconds or longer.
2. Select an item by using the assist mode switches (up & down).
   Press the function select switch at the displayed item that you want to select, and the selected item will then be displayed.
   Selecting “EXIT” returns to the main riding display.

⚠ WARNING

For all setting procedures, be sure to stop the bicycle and perform the required settings in a safe location. Otherwise, lack of attention to surrounding traffic could cause an accident.

[S---] ···· Press the function select switch for 2 seconds or longer
[S] ····· Press the function select switch
[▲] ····· Press the assist mode switch (up)
[▼] ····· Press the assist mode switch (down)

EPACK Manual (2017)_EU_Eng.indd 21 2016/08/30 11:13:46

INSTRUMENT AND CONTROL FUNCTIONS

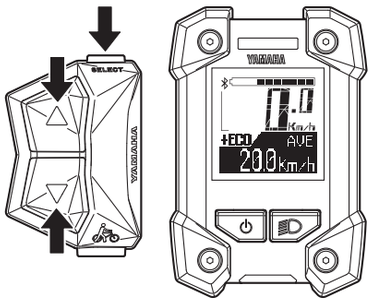

● STOPWATCH

The stopwatch counts time in seconds up to a maximum of 9 hours 59 minutes 59 seconds.
If this maximum is reached, it will automatically start over from 0 (zero) and continue counting.

- TIME MEASUREMENT
  Use the function select switch to start and stop time measurement.
  Press the function select switch for 2 seconds or longer to “RESET” the measured time.
- RESET
  When the function select switch is pressed, the measured time will be reset and the measuring display will be shown.
  Use the assist mode switches (up & down) to go to the “EXIT” display.
- EXIT
  When the function select switch is pressed, the display will return to the main riding display.
  Use the assist mode switches (up & down) to go to the “RESET” display.

TIP

- It is possible to return to the main riding display without interrupting time measurement.
- When the power is turned off, the measured time will be reset.

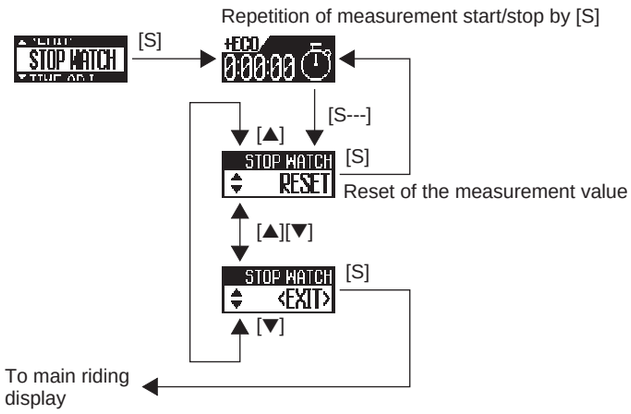

EPACK Manual (2017)_EU_Eng.indd 22 2016/08/30 11:13:47

INSTRUMENT AND CONTROL FUNCTIONS

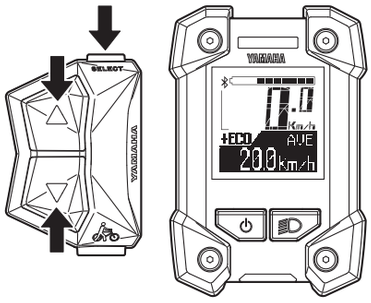

● TIME ADJ (TIME ADJUST)

You can adjust the time of the clock.

1. Check that the “Hour” is flashing and adjust the hour by using the assist mode switches (up & down).
2. Press the function select switch to adjust the minutes.
3. Check that the “Minute” is flashing and adjust the minutes by using the assist mode switches (up & down).
4. Press the function select switch to return to the main riding display.

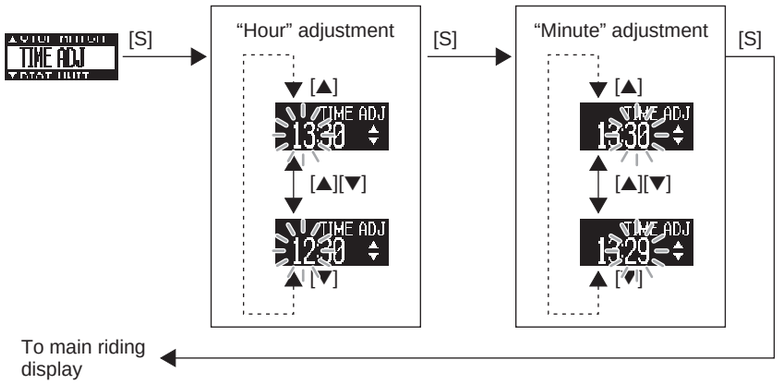

EPACK Manual (2017)_EU_Eng.indd 23 2016/08/30 11:13:48

INSTRUMENT AND CONTROL FUNCTIONS

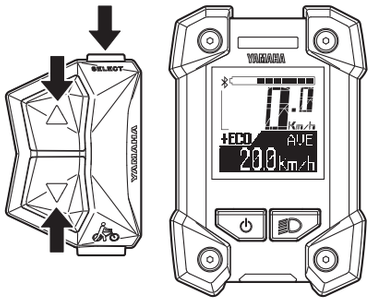

● DIST UNIT (DISTANCE UNIT)

You can select the display units for distance and speed.
When “km” is selected, the travelled distance will be indicated in kilometers and the speed in km/h.
When “mile” is selected, the travelled distance will be indicated in miles and the speed in mph.

1. Select “km” or “mile” by using the assist mode switches (up & down).
2. Press the function select switch when the desired unit is indicated in the display. This setting will then be kept and the display will return to the main riding display.

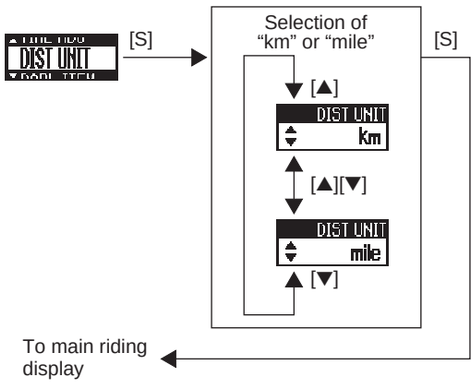

EPACK Manual (2017)_EU_Eng.indd 24 2016/08/30 11:13:48

INSTRUMENT AND CONTROL FUNCTIONS

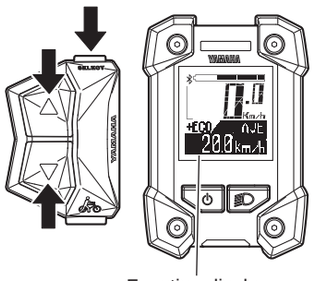

Function display

● DSPL ITEM (DISPLAY ITEM)

You can select to show or hide different items in the function display during normal riding.
The items which you can select to show or hide are: TRIP (trip meter), AVE (average bicycle speed), MAX (maximum bicycle speed), DIST (remaining assist distance), BATTERY (battery capacity (%)), CADENCE (cadence), and TIME (clock).

TIP

You cannot hide the odometer indication.

1. Select an item by using the assist mode switches (up & down).
2. Use the function select switch to show or hide the selected item. (When an item is shown, a check mark will be shown in the check box.)
3. When you press the function select switch in the “EXIT” display, the setting will be kept and the display will return to the main riding display.

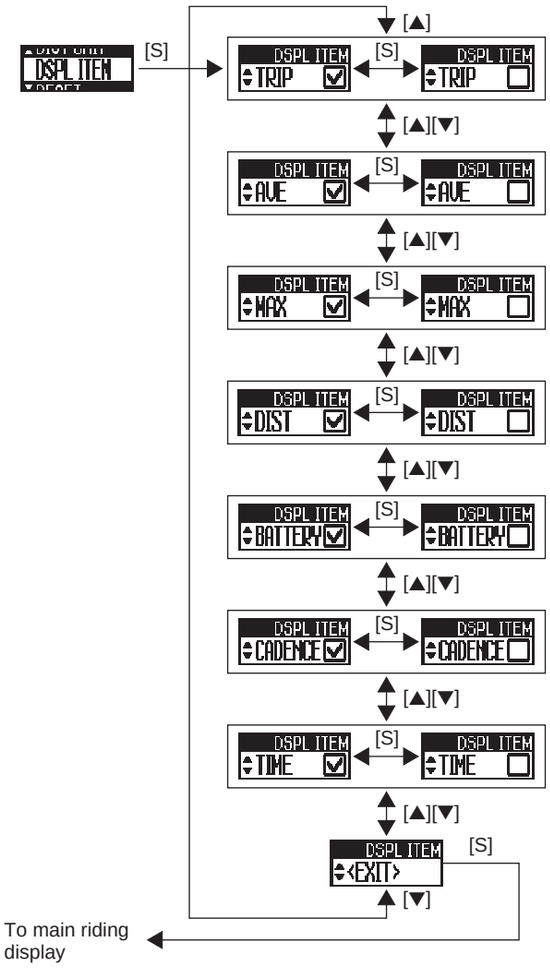

EPACK Manual (2017)_EU_Eng.indd 25 2016/08/30 11:13:50

INSTRUMENT AND CONTROL FUNCTIONS

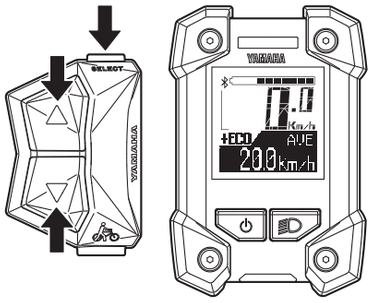

● RESET

You can reset the TRIP (trip meter), AVE (average bicycle speed), and MAX (maximum bicycle speed) values.

TIP

You cannot reset the odometer.

1. Select an item by using the assist mode switches (up & down) and use the function select switch to place a check mark in the check box for the item that you want to reset.
2. When you press the function select switch in the "EXIT" display, the items with check marks will be reset and the display will return to the main riding display.

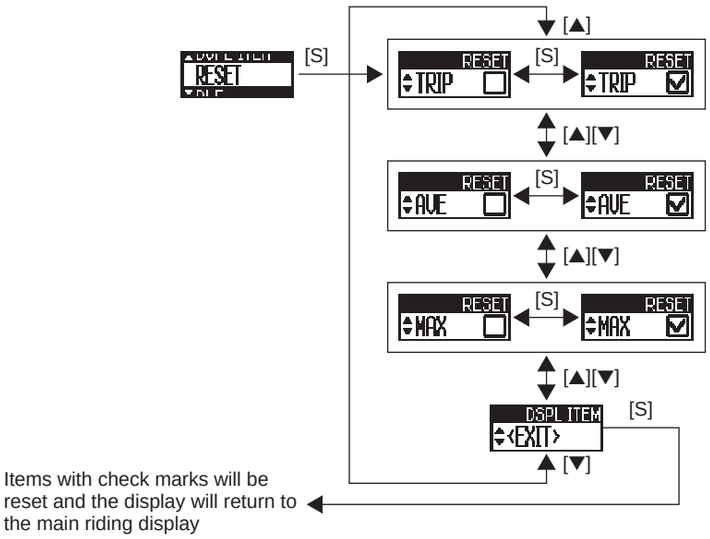

EPACK Manual (2017)_EU_Eng.indd 26 2016/08/30 11:13:51

INSTRUMENT AND CONTROL FUNCTIONS

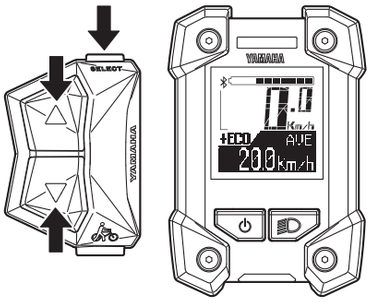

● BLE (Bluetooth low energy technology)

You can set the profile to use the wireless function with Bluetooth low energy technology, or you can select not to use the wireless function.
When “CSCP” is selected, the Cycling Speed and Cadence Profile will be available.
When “CPP” is selected, the Cycling Power Profile will be available.
When “OFF” is selected, the wireless function will be inactive.

TIP

- Set the profile according to the wireless communication equipment that communicates via Bluetooth low energy technology.
- For the output power level of each profile, see “SPECIFICATIONS”.
- Even if the power is turned off, the setting will be kept. When the power is turned on the next time, the last used setting will be selected.

1. Select “CSCP”, “CPP”, or “OFF” by using the assist mode switches (up & down).
2. When you press the function select switch at the desired item display, the setting will be kept and the main riding display will be shown.

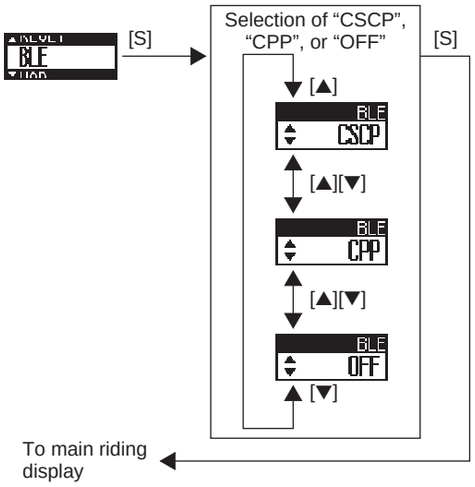

EPACK Manual (2017)_EU_Eng.indd 27 2016/08/30 11:13:51

INSTRUMENT AND CONTROL FUNCTIONS

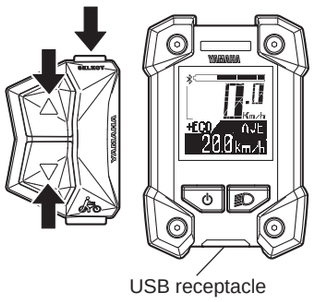

● USB

You can select the USB receptacle as a power supply receptacle or as a receptacle for communication over a wired connection.
When “PWR SPLY” is selected, it can be used as a power supply receptacle.
When “COMM” is selected, it can be used as a receptacle for wired communication.

TIP

- Normally you should not select “COMM” because this is a service mode used for wired communication by dealers.
- When the power is turned off, the mode automatically changes to “PWR SPLY”.

1. Select “PWR SPLY” or “COMM” by using the assist mode switches (up & down).
2. When you press the function select switch at the desired item display, the setting will be kept and the main riding display will be shown.

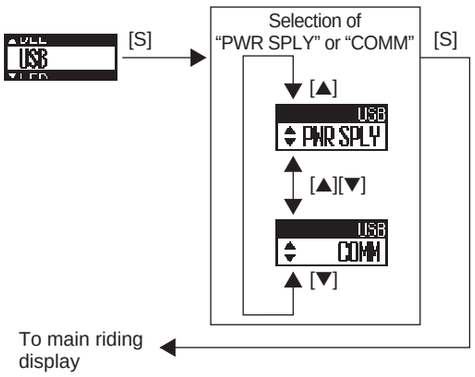

EPACK Manual (2017)_EU_Eng.indd 28 2016/08/30 11:13:52

INSTRUMENT AND CONTROL FUNCTIONS

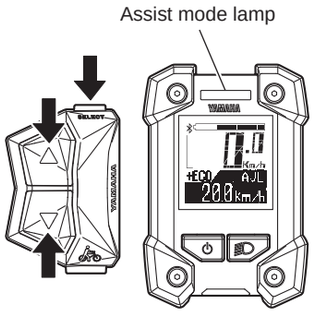

● LED

You can select to light up the assist mode lamp according to the assist mode or keep the assist mode lamp unlit all the time.
When “ON” is selected, the assist mode lamp will light up according to the assist mode.
When “OFF” is selected, the assist mode lamp will remain unlit all the time.

TIP

Even if the assist mode lamp is set to “OFF”, it will light up in red if an error occurs.

1. Select “ON” or “OFF” by using the assist mode switches (up & down).
2. When you press the function select switch at the desired item display, the setting will be kept and the main riding display will be shown.

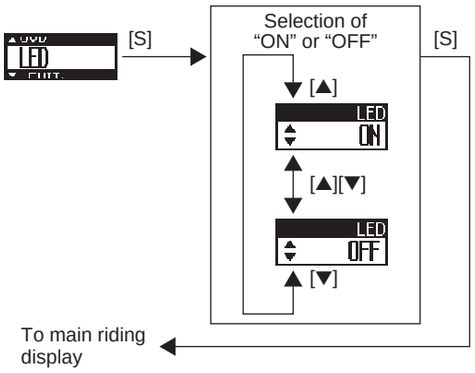

EPACK Manual (2017)_EU_Eng.indd 29 2016/08/30 11:13:52

INSTRUMENT AND CONTROL FUNCTIONS

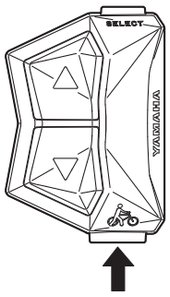

○ Pushing assist

When you are on or off the bicycle and start moving it, you can use pushing assist without pedaling the bicycle.
To use pushing assist, press and hold the pushing assist switch.
Pushing assist will stop in the following situations:

- When you release the pushing assist switch.
- If you press another switch at the same time.
- When you start to pedal.
- If your bicycle speed exceeds 6 km/h.
- If you select Off mode.
- If the wheels are not turning (when braking or coming into contact with an obstacle, etc.).

TIP

The maximum speed will vary depending on the selected gear. The maximum speed will become slower in a lower gear.

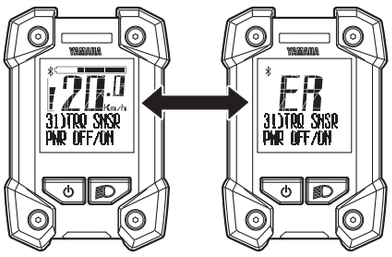

Displays alternately

○ Diagnosis mode

The e-Bike Systems are equipped with a diagnosis mode.
If a malfunction or fault occurs in the e-Bike Systems, the assist mode lamp will light up in red, and the main riding display and “ER” will be shown alternately, while an error description will inform you of the type of error in the function display. See “TROUBLESHOOTING” regarding symptoms and remedies for abnormal displays and abnormal flashing.

⚠ WARNING

If the problem cannot be solved, have your bicycle inspected by a dealer as soon as possible.

TIP

Even if the assist mode lamp is set to “OFF”, it will light up in red if a malfunction or fault occurs.

EPACK Manual (2017)_EU_Eng.indd 30 2016/08/30 11:13:53

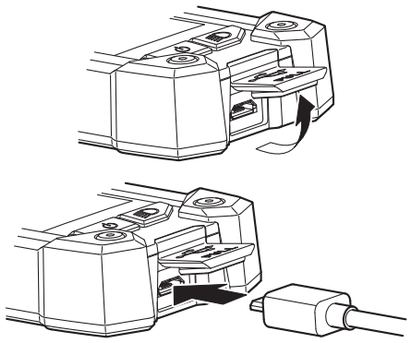

○ Power supply to external devices

Power can be supplied to most external devices (e.g. various smart phones etc.) by connecting a commercial USB 2.0 OTG cable.

[To supply power]
1. Open the USB receptacle cap of the display.
2. Connect the USB cable to the switch and external device.
3. Turn on the power of the vehicle.

[To stop the power supply]
1. Turn off the power of the vehicle.
2. Disconnect the USB cable and put on the cap of the USB receptacle.

NOTICE

- **Do not apply unreasonable force on the USB plug or pull the USB cable.**
- **Check that the USB plug is facing the right way and not totally out-of-position with the USB receptacle or slanted, and make sure it is fully inserted all the way in.**
- **Do not connect the USB receptacle and the USB plug in a wet state.**
- **Use a USB 2.0 OTG cable that conforms to the standards.**
- **Do not insert foreign objects into the USB receptacle unit.**

Otherwise the display unit and external device may malfunction.

TIP

- Power is supplied automatically when an external device is connected with the USB cable.
- No power is supplied if the remaining capacity of the battery pack is low.
- The power supply of the vehicle will go off and power supplied by the USB connection will also stop if the vehicle is not operated for 5 minutes.

EPACK Manual (2017)_EU_Eng.indd 31 2016/08/30 11:13:53

INSTRUMENT AND CONTROL FUNCTIONS

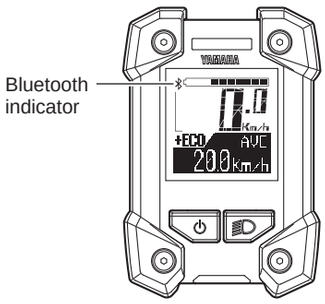

○ Communication with Bluetooth low energy technology

The wireless equipment corresponding to the CSCP or CPP profiles can provide the communication via Bluetooth low energy technology.

1. Set the profiles of the display unit by referring to “Stopwatch and settings”.
   Also confirm that they are in accordance with the connection settings of your wireless communication equipment.
2. Check that the Bluetooth indicator is displayed.
3. Select “Yamaha ####*” from the user menu of your wireless communication equipment.
   For more information, see the instruction manual of the wireless communication equipment.

   * “####” of “Yamaha ####” is a combination of irregular alphanumeric characters.

TIP

- Keep the distance between the display and wireless communication equipment within 1 m. The maximum communication distance of this equipment is 1 m.
  If the wireless communication equipment is kept in a bag, etc., the actual communication distance might be shorter.
- Do not use the equipment in places with magnetic fields, static electricity, or electromagnetic interference.
  If the equipment is used near transmitters, broadcasting stations or the following type of equipment, wireless communication may not be possible.
  - Microwave ovens
  - Digital cordless phones
  - Wireless communication devices
  - Near other wireless equipment using the 2.4 GHz band.
- Do not cover the display with objects such as aluminum sheets that block the radio waves. Otherwise, wireless communication may not be possible.
- For the output power level of each profile, see the “SPECIFICATIONS”.

EPACK Manual (2017)_EU_Eng.indd 32 2016/08/30 11:13:53

BATTERY PACK AND CHARGING PROCEDURE

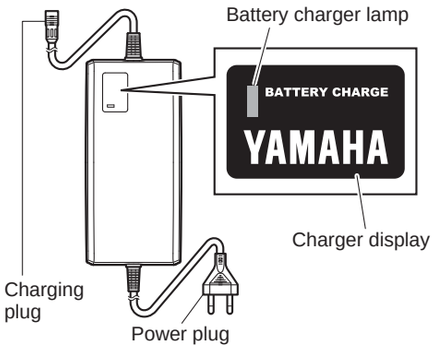

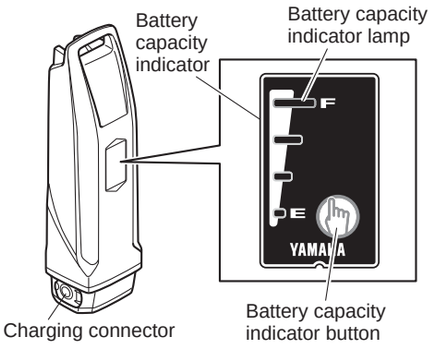

The battery pack equipped for the Yamaha e-Bike Systems is a lithium-ion battery. The lithium-ion battery is lightweight and offers superior capacity. However, it does have the following characteristics.

- Its performance decreases in extremely hot or cold environments.
- It naturally loses its charge.

The battery pack for the Yamaha e-Bike Systems also has an embedded computer which notifies you of estimated residual battery capacity and suspected faults via the battery capacity indicator lamp.
By pressing the battery capacity indicator button, you can display the residual battery capacity for approximately 5 seconds.
See “CHECKING THE RESIDUAL BATTERY CAPACITY” for the estimate of the residual battery capacity. See “TROUBLESHOOTING” for information on fault flashing.

EPACK Manual (2017)_EU_Eng.indd 33 2016/08/30 11:13:53

BATTERY PACK AND CHARGING PROCEDURE

Appropriate charging environments

For safe and efficient charging, use the battery charger in a location that is:

- Flat and stable (when on the bicycle)
- Free of rain or moisture
- Out of direct sunlight
- Well-ventilated and dry
- Not accessible to children or pets
- Temperature between 15–25 °C

Inappropriate charging environments and solutions.

The hot and cold environments described below can cause charging to enter standby or suspension without fully charging the battery.

- Summertime charging standby/suspension
  If charging in a location receiving direct summer sunlight or immediately after riding, the battery charger might enter charging standby (all four battery capacity indicator lamps flash slowly). See “Reading the charging status”. This is to automatically stop charging in order to protect the battery from exceeding the specified temperature while charging. You can avoid charging suspension by starting to charge with the battery cold or at a room temperature of 15–25 °C. If charging suspension occurs, move the battery charger to a cool location to reduce the charging standby time.

- Wintertime charging standby/suspension
  Charging standby will occur if the temperature is 0 °C lower. If charging is started and the temperature drops below this level due to late-night cooling or other factors, charging is suspended and standby mode is entered to protect the battery. In such cases, restart charging at an indoor location with a temperature of 15–25 °C.

- Noise on televisions/radios/computers
  Charging next to televisions, radios, or similar appliances might cause static, flickering images, and other interference. If this occurs, recharge in a location further away from the television or radio (such as in another room).

EPACK Manual (2017)_EU_Eng.indd 34 2016/08/30 11:13:53

BATTERY PACK AND CHARGING PROCEDURE

⚠ WARNING

If a charging fault occurs during charging, remove the power plug of the battery charger from the socket and wait for the battery pack/battery charger to cool.

[CHARGING THE BATTERY PACK MOUNTED ON THE BICYCLE]

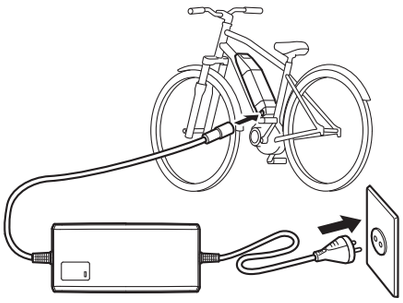

1. Connect the power plug of the battery charger to a household power outlet.
2. Remove the cap of charging inlet from the charging connector on the battery pack, and connect it to the charging plug on the battery charger.

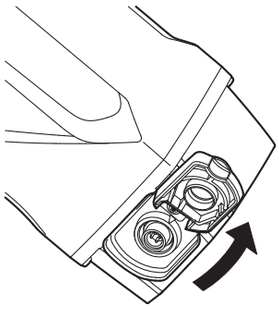

NOTICE

- **Do not connect the charging plug of the battery charger with the charging connector of the battery in a wet state.**
- **Be sure to connect the charging plug only after the charging connector on the battery pack is completely dry.**

Otherwise the battery charger and battery may malfunction.

- **Do not apply excessive force to the charging plug or pull on the cord with the charging plug connected to the battery.**

Otherwise, the plug or connector may be damaged.

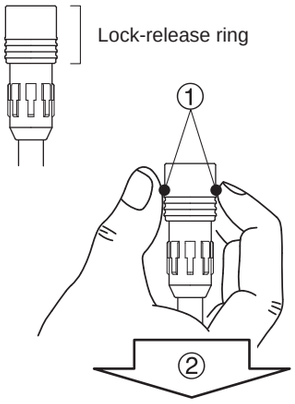

3. See “Reading the charging status”, and check that the battery charger is charging the battery pack.
4. The battery capacity indicator lamps will light up one by one until all four are on. Then, when charging is complete, all of the lamps will go off.
5. Confirm that charging is complete, and then disconnect the charging plug from the battery pack.
   How to disconnect the plug (see the left figure)
   ① Grasp the lock-release ring.
   ② Pull it out straight.
6. Place the cap of charging inlet on the battery pack’s charging connector.

⚠ WARNING

Never handle the power plug, charging plug or touch the charger contacts with wet hands. This could result in electric shock.

EPACK Manual (2017)_EU_Eng.indd 35 2016/08/30 11:13:53

BATTERY PACK AND CHARGING PROCEDURE

TIP

- Charging will start automatically.
- If the display unit is turned on while the battery pack is charging, all normal displays will be shown, including the battery capacity indicator, but the assist system will not function.
- When the battery pack is connected to the battery charger, battery charger lamp will flash at approximately 0.2 second intervals to indicate that charging is preparing to charge the battery pack. Leave it as it is and charging will start normally.

[CHARGING THE BATTERY PACK REMOVED FROM THE BICYCLE]

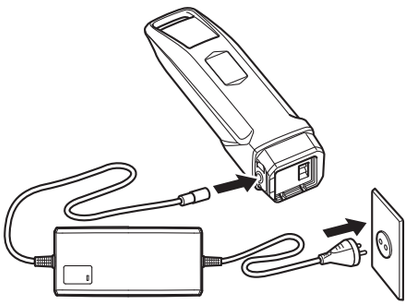

1. Turn the display unit off.
2. Insert the key into the battery lock, and turn it to release the battery lock.
3. Remove the battery pack.

⚠ WARNING

Use both hands when removing the battery pack, being careful not to drop it. Dropping the battery pack on your foot could result in injury.

4. Connect the power plug of the battery charger to a household power outlet.
5. Remove the cap from the charging connector on the battery pack, and connect it to the charging plug on the battery charger.

NOTICE

- **Do not connect the charging plug of the battery charger with the charging connector of the battery in a wet state.**
- **Be sure to connect the charging plug only after the charging connector on the battery pack is completely dry.**

Otherwise the battery charger and battery may malfunction.

- **Do not apply excessive force to the charging plug or pull on the cord with the charging plug connected to the battery.**

Otherwise, the plug or connector may be damaged.

EPACK Manual (2017)_EU_Eng.indd 36 2016/08/30 11:13:53

BATTERY PACK AND CHARGING PROCEDURE

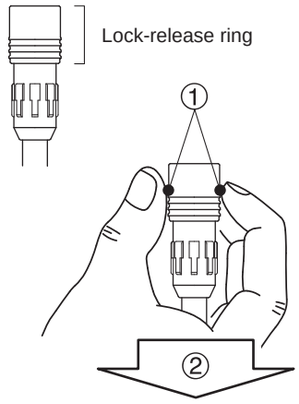

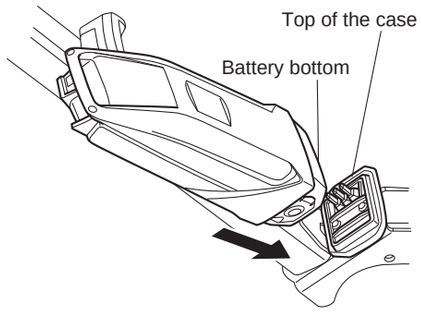

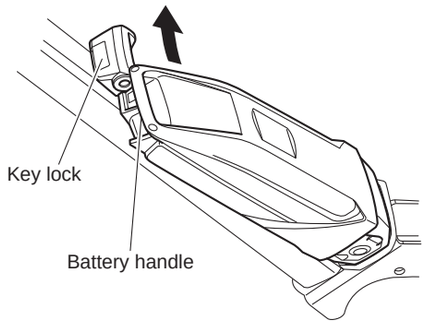

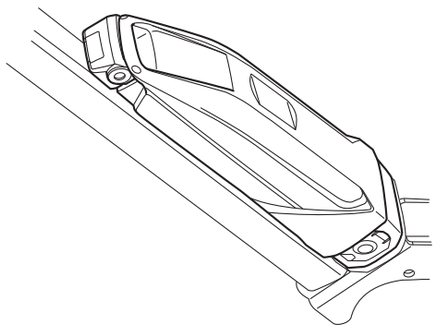

6. See “Reading the charging status”, and check that the battery charger is charging the battery pack.
7. The battery capacity display lamps will light up one by one until all four are on. Then, when charging is complete, all of the lamps will go off.
8. Confirm that charging is complete, and then disconnect the charging plug from the battery pack.
   How to disconnect the plug (see the left figure)
   ① Grasp the lock-release ring.
   ② Pull it out straight.
9. Place the cap on the battery pack’s charging connector.
10. Mount the battery pack on the bicycle.

TIP

Mounting method of the battery pack

- Insert the battery in the direction of the arrow so that the battery bottom is aligned to the top of the case.
- Insert the upper part of the battery in the direction of the arrow so that the battery handle is aligned to the top of the key lock.
- Press the upper part of the battery toward the frame until it clicks into place to secure it.

EPACK Manual (2017)_EU_Eng.indd 37 2016/08/30 11:13:54

BATTERY PACK AND CHARGING PROCEDURE

11. Make sure that it is securely attached by pulling the battery after installation.

NOTICE

Make sure there is no foreign matter on the battery pack contacts before inserting the battery pack.

EPACK Manual (2017)_EU_Eng.indd 38 2016/08/30 11:13:54

BATTERY PACK AND CHARGING PROCEDURE

Reading the charging status

Battery charger lamp	Battery capacity indicator lamps	Current status	Details
BATTERY CHARGE YAMAHA On	Lit power lamps indicate the amount of charging completed. A flashing power lamp indicates current progress. (Example: Battery is approximately 50–75 % charged.)	Charging	During charging, the battery capacity indicator lamps light up one by one.
BATTERY CHARGE YAMAHA Off	 Off	Charging completed	When charging is complete, the charging lamp on the battery charger and the battery capacity indicator lamp on the battery pack go off.
	Four lamps flash simultaneously. 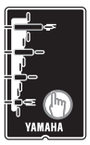	Battery is in standby mode. * The battery internal temperature is too high or too low.	Charging will automatically restart when a temperature is reached that allows charging. (See “Appropriate charging environments”.) When possible, always perform charging at the optimal temperature of 15–25 °C.
		Battery is in fault mode.	There is a fault in the charging system. See “TROUBLESHOOTING”.

EPACK Manual (2017)_EU_Eng.indd 39 2016/08/30 11:13:54

BATTERY PACK AND CHARGING PROCEDURE

TIP

For example, even if normal charging is started, if the battery temperature or the surrounding temperature is too high or too low, the charging may be extended or charging may be stopped without the battery being charged sufficiently in order to protect the battery.

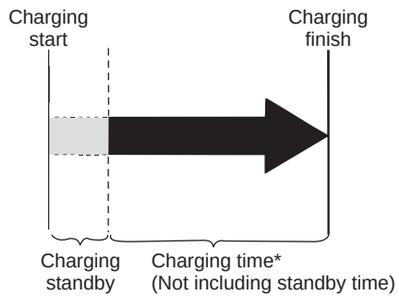

Charging time guidelines

Although charging time varies depending on residual battery capacity and external temperature, if the battery has been exhausted, it generally takes approximately 4 hours (500 Wh)/3.5 hours (400 Wh) until one battery capacity indicator lamp flashes.

If the battery pack enters standby mode while charging, charging time will increase by an equal amount.

* If charging after a long period of disuse, the charging time will be lengthened depending on the battery status. However, note that if the battery capacity indicator lamps do not flash in fault pattern (See “Reading the charging status”), there is no malfunction.

EPACK Manual (2017)_EU_Eng.indd 40 2016/08/30 11:13:54

CHECKING THE RESIDUAL BATTERY CAPACITY

You can check the estimate of how much capacity is left in the battery and to what extent it is charged. The check can be performed using either the display unit's residual battery capacity indicator or the battery's residual battery capacity indicator lamps.

TIP

- Even if the battery's capacity reaches 0 (zero), you can still ride the bicycle as a regular bicycle.
- If you are using an old battery pack, the residual battery capacity indicator may suddenly display very little power when you start moving. This is not a malfunction. Once riding stabilizes and the load is reduced, the proper value is displayed.

Residual battery capacity indicator display and estimate of residual battery capacity for display unit

The residual battery capacity can be displayed as a numerical value on the LCD display.

Display of the residual battery capacity for the display unit	Display of the residual battery capacity	Applicable situation
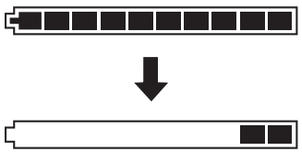	100–11 %	When you turn on the power of the LCD multi-function drive controller and ride continually after the battery is fully charged, the segments for the residual battery capacity indicator go out one by one each time the residual battery capacity is reduced by 10 %.
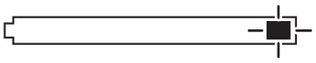 Slow flashing <every 0.5 seconds>	10–1 %	There is very little residual battery capacity left. Please charge the battery soon.
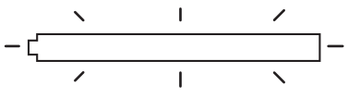 Fast flashing <every 0.2 seconds>	0 %	There is no more residual battery capacity. Turn off the power for the LCD multi-function drive controller and charge the battery pack soon. * Assist is stopped, but you can still ride the bicycle as a regular bicycle.

EPACK Manual (2017)_EU_Eng.indd 41 2016/08/30 11:13:54

CHECKING THE RESIDUAL BATTERY CAPACITY

Display of the battery capacity indicator lamps and the estimate of the residual battery capacity

When checking the residual battery capacity, push the battery capacity indicator button “”.

Display of the battery capacity indicator lamps	Estimate of the residual battery capacity	Applicable situation
	100–76 %	From full charge (100 %), the battery capacity indicator lamps turn off, one by one.
	75–51 %	
	50–26 %	
	25–11 %	
 The bottom of lamp slow flashing <0.5 second interval>	10–1 %	There is very little battery capacity left.
 The bottom of lamp fast flashing <0.2 second interval>	0 %	The battery capacity has reached 0 (zero). Please charge the battery pack.

EPACK Manual (2017)_EU_Eng.indd 42 2016/08/30 11:13:54

PRE-OPERATION CHECK

⚠ WARNING

Be sure to perform the inspection before riding the bicycle.
If there is anything you do not understand or find difficult, please consult a bicycle dealer.

NOTICE

- **If you confirm there is a fault, have your bicycle inspected at a dealer as soon as possible.**
- **The power assist mechanism consists of precision parts. Do not disassemble it.**

Along with performing the regular inspection before riding the bicycle, also perform the following inspections.

No.	Inspection item	Inspection contents
1	Residual battery capacity	Is enough capacity left in the battery?
2	Installation status of the battery pack	Is it properly installed?
3	Operation of the e-Bike Systems	Do the e-Bike Systems operate when you begin moving?

EPACK Manual (2017)_EU_Eng.indd 43 2016/08/30 11:13:54

CLEANING AND STORAGE

NOTICE

Do not use high-pressure washers or steam jet cleaners since they can cause water seepage, resulting in property damage or malfunction of the Drive Unit or display unit or battery pack. Should water get inside one of these units, have an authorized dealer inspect your bicycle.

Caring for the battery pack

Use a moist, tightly-wrung towel to wipe off dirt on the battery case. Do not pour water directly on the battery pack, such as with a hose.

NOTICE

Do not clean the contacts by polishing them with a file or using a wire, etc. Doing so could result in a fault.

Storage

Store the system in a place that is:

- Flat and stable
- Well ventilated and free from moisture
- Sheltered from the elements and from direct sunlight

EPACK Manual (2017)_EU_Eng.indd 44 2016/08/30 11:13:54

CLEANING AND STORAGE

Long storage period (1 month or longer) and using it again after a long storage period

- When storing the bicycle for a long period (1 month or longer), remove the battery pack and store it using the following procedure.
- Decrease the residual battery capacity to where one or two lamps are lit, and store it indoors in a cool (10 to 20 °C), dry place.
- Check the residual battery capacity once a month, and if only one lamp is flashing, charge the battery pack for about 10 minutes. Do not let the residual battery capacity become too low.

TIP

- If you leave the battery pack at “full charge” or “empty”, it will deteriorate quicker.
- Due to self-discharge, the battery slowly loses its charge during storage.
- The battery’s capacity decreases over time but proper storage will maximize its service life.

- When using it again after a long storage period, be sure to charge the battery pack before using it. Also, if you are using it again after storing it for 6 months or longer, have your bicycle inspected and maintained at a dealer.

EPACK Manual (2017)_EU_Eng.indd 45 2016/08/30 11:13:54

TRANSPORT

The batteries are subject to the Dangerous Goods Legislation requirements. When being transported by third parties (e.g. via air transport or forwarding agency), special requirements on packaging and labels must be observed. To prepare the item for shipping, consult a hazardous materials expert. The customer can transport the batteries by road without further requirements. Do not transport damaged batteries.
Tape or mask off open contacts and pack up the battery pack in such a manner that it cannot move around in the packaging. Be sure to observe all local and national regulations. In case of questions concerning transport of the batteries, please refer to an authorized bicycle dealer.

EPACK Manual (2017)_EU_Eng.indd 46 2016/08/30 11:13:54

CONSUMER INFORMATION

Disposal

The Drive Unit, battery pack, battery charger, display unit, speed sensor set, accessories and packaging should be sorted for environmental-friendly recycling.
Do not dispose of the bicycle or its components as household waste.

For EU countries:

According to the European Guideline 2012/19/EU, electrical devices/tools that are no longer usable, and according to the European Guideline 2006/66/EC, defective or used battery packs/batteries, must be collected separately and disposed of in an environmentally correct manner.
Please return battery packs that are no longer usable to an authorized bicycle dealer.

EPACK Manual (2017)_EU_Eng.indd 47 2016/08/30 11:13:55

TROUBLESHOOTING

E-Bike Systems

Symptom	Check	Action
Pedaling is difficult.	Is the display unit's power on?	**Press the power switch on the display unit to turn the power on.**
	Is the battery pack installed?	**Install a charged battery pack.**
	Is the battery pack charged?	**Charge the battery pack.**
	Has the bicycle remained stationary for 5 minutes or longer?	**Turn the power on again.**
	Are you riding on a long inclined road or carrying a heavy load during summertime?	**This is not a malfunction. It is a safeguard engaged when the temperature of the battery pack or the Drive Unit is too high. Power assist will be restored once the temperature of the battery pack or the Drive Unit has decreased. Also, you can make this less likely to occur by shifting to a lower gear than you would usually use (for example, by shifting from second to first gear).**
	Is the air temperature low (roughly 10 °C or below)?	**During the wintertime, store the battery pack indoors before use.**
	Are you charging the battery pack while it is mounted on the bicycle?	**Stop charging the battery pack.**
The Drive Unit turns on and off while riding.	Is the battery pack correctly installed?	**Check to make sure the battery pack is locked in place. If this problem still occurs with the battery pack firmly locked in place, there may be a loose connection the battery pack terminals or wires. Have an authorized dealer inspect your bicycle.**
Strange rumbling or crunching noises come from the Drive Unit.		**There could be a problem inside the Drive Unit.**
Smoke or unusual odor comes from the Drive Unit.		**There could be a problem inside the Drive Unit.**

EPACK Manual (2017)_EU_Eng.indd 48 2016/08/30 11:13:55

TROUBLESHOOTING

Symptom	Check	Action
The assist mode lamp lights up in red, the main riding display and “ER” are displayed alternately, and an error description is indicated in the function display. 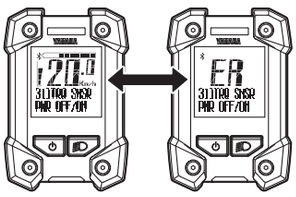 Displays alternately Error displays		**The problem occurs in the e-Bike Systems. Turn off the power and then turn it on again.** **If the problem cannot be solved, have your bicycle inspected by a dealer as soon as possible.**
The display unit shuts down immediately (approx. 4 seconds later) after switching the power on.	Are the bicycle’s battery pack connection terminals dirty?	**Remove the battery pack, clean the bicycle’s terminals with a dry cloth or cotton swab, and then install the battery pack again.**
Traveling range has decreased.	Are you fully charging the battery pack?	**Charge the battery pack until full (F).**
	Are you using the system under low-temperature conditions?	**Normal traveling range will be restored when the ambient temperature rises. Additionally, storing the battery pack indoors (in a warm location) before use will improve traveling range under cold conditions.**
	Is the battery pack worn out?	**Replace the battery pack.**

EPACK Manual (2017)_EU_Eng.indd 49 2016/08/30 11:13:55

TROUBLESHOOTING

Symptom	Check	Action
An assist mode lamp lights up in red and an error description is indicated in the function display. Error displays		**The speed sensor cannot detect a correct signal.** **Turn off the power to the display unit and then turn it on again, select the assist mode and then ride for short distance. Also, make sure the magnet is mounted correctly on the spokes of the wheels.**

Pushing assist function

Symptom	Check	Action
The pushing assist function turns off.	Is the tire locked for a few seconds?	**Release your finger from the pushing assist switch for a moment, and after making sure that the tires turn, push the switch again.**
	Did you pedal while the pushing assist function was running?	**Take your feet off the pedals, and remove your finger from the pushing assist switch for a moment, and then press it again.**

EPACK Manual (2017)_EU_Eng.indd 50 2016/08/30 11:13:55

TROUBLESHOOTING

Power supply of external devices via USB connection

Symptom	Check	Action
Power is not supplied.	Is the display unit's power on?	**Press the power switch on the display unit to turn the power on.**
	Is the USB version correct?	**Use an external device that complies with USB 2.0.**
	Is the USB cable type correct?	**Use an OTG cable. And connect the host side to the switch.**
	Is the USB cable firmly connected?	**Re-connect the USB cable.**
	Is the USB receptacle or USB plug terminal dirty or wet?	**Disconnect the USB cable from the display unit and external device. Remove the dirt and water on the USB receptacle and USB plug terminal and re-connect the cable.**
	Is USB set to "COMM"?	**Set the USB settings to "PWR SPLY" by referring to "Stopwatch and settings" or turn off the power and then turn it on again.**

Wireless communication with Bluetooth low energy technology

Symptom	Check	Action
Wireless communication cannot be used.	Are both the wireless communication settings of the display unit and your wireless communication equipment turned off?	**Set the communication profiles by referring to "Stopwatch and settings", and then set the correct communication profiles of the wireless equipment or application software.**
	Are the communication profiles of the wireless equipment or application software that communicates wirelessly with the communication profiles of the display correct?	
The display values of the external wireless communication equipment are wrong.	Did you change the settings of the communication profiles?	**Reset pairing for a moment, set the communication profiles of the display, and then establish pairing again. For resetting of pairing and the procedure of establishing pairing, refer to the instruction manual supplied with the wireless communication equipment.**

EPACK Manual (2017)_EU_Eng.indd 51 2016/08/30 11:13:55

TROUBLESHOOTING

Battery pack and charger

Symptom	Check	Action
Cannot charge	Is the power plug firmly connected? Is the charging plug firmly inserted in the battery pack?	**Reconnect and try charging again. If the battery pack still does not charge, the battery charger might be malfunctioning.**
	Are the residual battery capacity lamps lit?	**Review charging method and try charging again. If the battery pack still does not charge, the battery charger might be malfunctioning.**
	Are the battery charger or battery pack contact terminals dirty or wet?	**Remove the battery pack from the battery charger and the charger plug from the socket. Use a dry cloth or cotton swab to clean the charger and battery contact terminals, and then reconnect.**
	There is a contact fault in the contact terminals.	**Remove the battery pack from the bicycle, connect the charging plug into the battery pack. (If lamps still flash alternately, there might be a fault in the battery pack) When remount the battery pack on the bicycle and press the power switch of display unit, if lamps still flash alternately, there might be a fault in the Drive Unit.**
	There is a contact fault in the contact terminals.	**Remove the battery pack from the battery charger, mount the battery on the bicycle and press the power switch of display unit. When the charging plug reconnected into the battery pack, if lamps still flash simultaneously, there might be a fault in the battery charger.**
	Isn’t the charging connector on the battery pack wet?	**Clean the charging connector and charging plug, and dry them. After that, connect the charging plug to the charging connector.**

EPACK Manual (2017)_EU_Eng.indd 52 2016/08/30 11:13:55

TROUBLESHOOTING

Symptom	Check	Action
Both side lamps are flashing simultaneously. 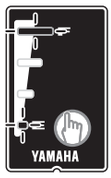		**The battery pack protection feature has been activated and the system cannot be used. Replace the battery pack at an authorized dealer as soon as possible.**
The battery charger emits abnormal noises, foul odors or smoke.		**Unplug the charger plug and immediately cease operation.**
The battery charger becomes hot.	It is normal for the battery charger to become somewhat warm during charging.	**If the battery charger is too hot to be touched by hand, unplug the charger plug, wait for it to cool, and consult an authorized dealer.**
After charging, all of the battery capacity indicator lamps do not light up when the battery capacity indicator button "☝" is pressed.	Has the charger plug been unplugged or the battery pack removed during charging?	**Charge the battery pack again.**
	Did you start charging with the battery pack at a high temperature, such as immediately after use?	**Move to a location where the battery temperature can reach the range where charging is possible (15–25 °C), and then start charging again.**
After disconnecting the charging plug on the battery charger from the battery pack, the battery capacity indicator lamps continue to light.	Isn't the charging connector on the battery pack wet?	**Clean the charging connector and charging plug, and dry them.**

EPACK Manual (2017)_EU_Eng.indd 53 2016/08/30 11:13:55

SPECIFICATIONS

Range of assist speed		0 to less than 25 km/h
Electric motor	Type	Brushless DC type
	Rated output	250 W
Assist power control method		Control method depends on pedaling torque and bicycle speed
Battery 400 Wh/500 Wh	Type	PASB2/PASB5 (Lithium-ion battery)
	Voltage	36 V
	Capacity	11 Ah/13.6 Ah
	Number of battery cells	40
Charger	Type	PASC5
	Input voltage	AC 220–240 V/50–60 Hz
	Maximum output voltage	DC 42 V
	Maximum output current	DC 4.0 A
	Maximum consumed power	310 VA/180 W (Charged at AC 240 V)
	Applicable type battery	PASB2/PASB5
Display unit (Power supply portion)	USB receptacle type	USB2.0 Micro-B (OTG type)
	Output current	Max. 1000 mA
	Rated voltage	5 V

EPACK Manual (2017)_EU_Eng.indd 54 2016/08/30 11:13:55

SPECIFICATIONS

Display unit (Wireless communication portion)	Communication system	Bluetooth version 4.0 (Bluetooth low energy technology)
	Output power	Power class 3
	Communication range	Line-of-sight distance approx. 1 m (3 ft) without interference
	Frequency band	2.4 GHz band (2.400 GHz–2.4835 GHz)
	Modulation method	GFSK
	Supported profiles	CSCP*1 CPP*2

*1 CSCP (Cycling Speed and Cadence Profile)
Corresponds to the wheel revolution data and crank revolution data.

*2 CPP (Cycling Power Profile)
Corresponds to the wheel revolution data, crank revolution data, instantaneous power, and accumulated energy.

- Communication is not necessarily guaranteed with all wireless communication devices that have the same profiles as this system.
  Even when a device complies with the specification for Bluetooth low energy technology, there may be cases where the characteristics, specifications, or communicative environment of the device with this technology make it impossible to connect, or may result in different control methods, display or operation.
- YAMAHA MOTOR CO., LTD. can not be held liable in any way for damages or other loss resulting from information leaks during the communication via Bluetooth low energy technology.

EPACK Manual (2017)_EU_Eng.indd 55 2016/08/30 11:13:55

YAMAHA

INSTRUMENT AND CONTROL FUNCTIONS

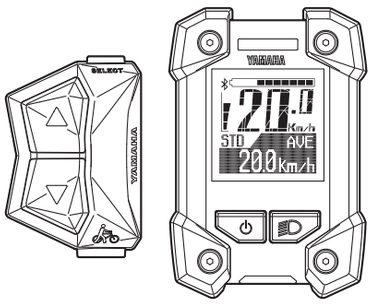

Display unit

The display unit offers the following operations and information displays.

NOTICE

This device complies with Part 15 of the FCC Rules and Industry Canada licence exempt RSS-247 standard. Operation is subject to the following two conditions:(1) This device may not cause harmful interference, and (2) This device must accept any interference received, including interference that may cause undesired operation.

Le manuel d'utilisation des appareils radio exempts de licence doit contenir l'énoncé qui suit, ou l'équivalent, à un endroit bien en vue et/ou sur les appareils :

Le présent appareil est conforme aux CNR d'Industrie Canada applicables aux appareils radio exempts de licence. L'exploitation est autorisée aux deux conditions suivantes : (1) l'appareil ne doit pas produire de brouillage, et (2) l'utilisateur de l'appareil doit accepter tout brouillage radioélectrique subi, même si le brouillage est susceptible d'en compromettre le fonctionnement.

FCC ID : 2ADBKX0P00
IC: 740A-X0P00
CAN ICES-3 (B) / NMB-3 (B)

Brand name : YAMAHA
Model no. : X0P00
Manufacturer name : YAMAHA MOTOR CO., LTD.

MADE IN CHINA

INSTRUMENT AND CONTROL FUNCTIONS

NOTICE

Federal Communication Commission Interfere-nce Statement

This equipment has been tested and found to comply with the limits for a Class B digital device, pursuant to Part 15 of the FCC Rules. These limits are designed to provide reasonable protection against harmful interference in a residential installation.
This equipment generates, uses and can radiate radio frequency energy and, if not installed and used in accordance with the instructions, may cause harmful interference to radio communications. However, there is no guarantee that interference will not occur in a particular installation. If this equipment does cause harmful interference to radio or television reception, which can be determined by turning the equipment off and on, the user is encouraged to try to correct the interference by one of the following measures:

. Reorient or relocate the receiving antenna.
. Increase the separation between the equipment and receiver.
. Connect the equipment into an outlet on a circuit different from that to which the receiver is connected.
. Consult the dealer or an experienced radio/TV technician for help.

FCC Caution: To assure continued compliance, any changes or modifications not expressly approved by the party responsible for compliance could void the user's authority to operate this equipment. (Example - use only shielded interface cables when connecting to computer or peripheral devices).

FCC Radiation Exposure Statement

This equipment complies with FCC RF radiation exposure limits set forth for an uncontrolled environment.

This transmitter must not be co-located or operating in conjunction with any other antenna or transmitter.

This device complies with Part 15 of the FCC Rules. Operation is subject to the following two conditions:
(1) This device may not cause harmful interference, and
(2) This device must accept any interference received, including interference that may cause undesired operation.

INSTRUMENT AND CONTROL FUNCTIONS

NOTICE

IC Radiation Exposure Statement:
his equipment complies with IC RSS-102 radiation exposure limits set forth for an uncontrolled environment.

Déclaration d'exposition à la radiation:
Cet équipement respecte les limites d'exposition aux rayonnements IC RSS-102 définies pour un environnement non contrôlé.

○ Installing the battery

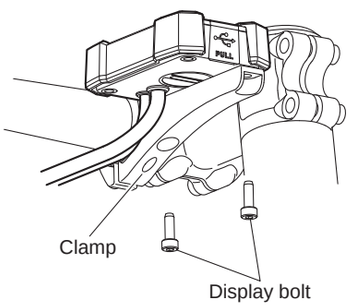

The display need be removed and installed for changing the battery.

- Remove the two bolts on back side of the clamp, and then remove the display.
- When installing the display, tighten the two display bolts from the back side of the clamp.

⚠ WARNING

Tighten the display bolts to 1.5–2.5 N·m. During riding, vibration could cause the bolts to come loose with the risk that the display may fall off.

TIP

- The clamp and display might be installed on the right side of the stem.
- For models without this clamp, the above note does not apply.

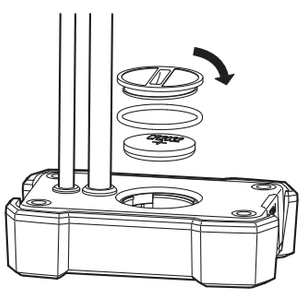

○ Battery

Check if the rated battery (CR2032) is installed in the rear of the display.
If a battery is not installed, or if there is not sufficient battery power remaining, install a new battery.
To adjust the time and set the units for distance and speed, see "Stop watch and settings".