# Introduction

Thank you for choosing a Yamaha Power Assist Bicycle.

NOTICE

- This manual contains important safety, performance and service information. Read it before you take the first ride on your new bicycle, and keep it for reference.
- Additional safety, performance and service information for specific components such as suspension or pedals on your bicycle, or for accessories such as helmets or lights that you purchase, may also be available. Make sure that your dealer has given you all the manufacturers' literature that was included with your bicycle or accessories. In case of a conflict between the instructions in this manual and information provided by a component manufacturer, always follow the component manufacturer's instructions.
- If you have any questions or do not understand something, take responsibility for your safety and consult with your dealer or the bicycle's manufacturer.

TIP

This manual is not intended as a comprehensive use, service, repair or maintenance manual. Please see your dealer for all service, repairs or maintenance. Your dealer may also be able to refer you to classes, clinics or books on bicycle use, service, repair or maintenance.

X1V Meter
OWNER'S MANUAL
©2019 by Yamaha Motor Corporation, U.S.A.
1st edition, Aug 2019
All rights reserved.
Any reprinting or unauthorized use
without the written permission of
Yamaha Motor Corporation, U.S.A.
is expressly prohibited.

8199-201909

# General warning

Like any sport, bicycling involves risk of injury and damage. By choosing to ride a bicycle, you assume the responsibility for that risk, so you need to know — and to practice — the rules of safe and responsible riding and of proper use and maintenance. Proper use and maintenance of your bicycle reduces risk of injury.

This manual contains many “Warnings” and “Notices” concerning the consequences of failure to maintain or inspect your bicycle and of failure to follow safe cycling practices.

| | |
|---|---|
| ⚠ | This is the safety alert symbol. It is used to alert you to potential personal injury hazards. Obey all safety messages that follow this symbol to avoid possible injury or death. |
| ⚠ WARNING | A WARNING indicates a hazardous situation which, if not avoided, could result in death or serious injury. |
| NOTICE | A NOTICE indicates special precautions that must be taken to avoid damage to the bicycle or other property. |
| TIP | A TIP provides key information to make procedures easier or clearer. |

Many of the Warnings and Notices say “you may lose control and fall”. Because any fall can result in serious injury or even death, we do not always repeat the warning of possible injury or death.

Because it is impossible to anticipate every situation or condition which can occur while riding, this manual makes no representation about the safe use of the bicycle under all conditions. There are risks associated with the use of any bicycle which cannot be predicted or avoided, and which are the sole responsibility of the rider.

The Bluetooth® word mark and logos are registered trademarks owned by the Bluetooth SIG, Inc. and any use of such marks by YAMAHA MOTOR CO., LTD. is under license.

8199-201909

## ⚠ Safety information

Do not press the pushig assist switch if the rear tire is off the ground. Otherwise, the tire will turn at high speed in the air and you could be injured.

Do not use the wireless function with Bluetooth low energy technology in areas such as hospitals or medical institutions where use of electronic equipment or wireless equipment is prohibited. Otherwise, this could affect the medical equipment, etc. and cause an accident.

When using the wireless function with Bluetooth low energy technology, keep the display at a safe distance from heart pacemakers in use. Otherwise, the radio waves could affect the heart pacemaker function.

Do not use the wireless function with Bluetooth low energy technology near automatic control equipment such as automatic doors, fire alarms, etc. Otherwise, the radio waves could affect the equipment and cause an accident through possible malfunction or unintentional operation.

## Instrument and control functions

### Display unit

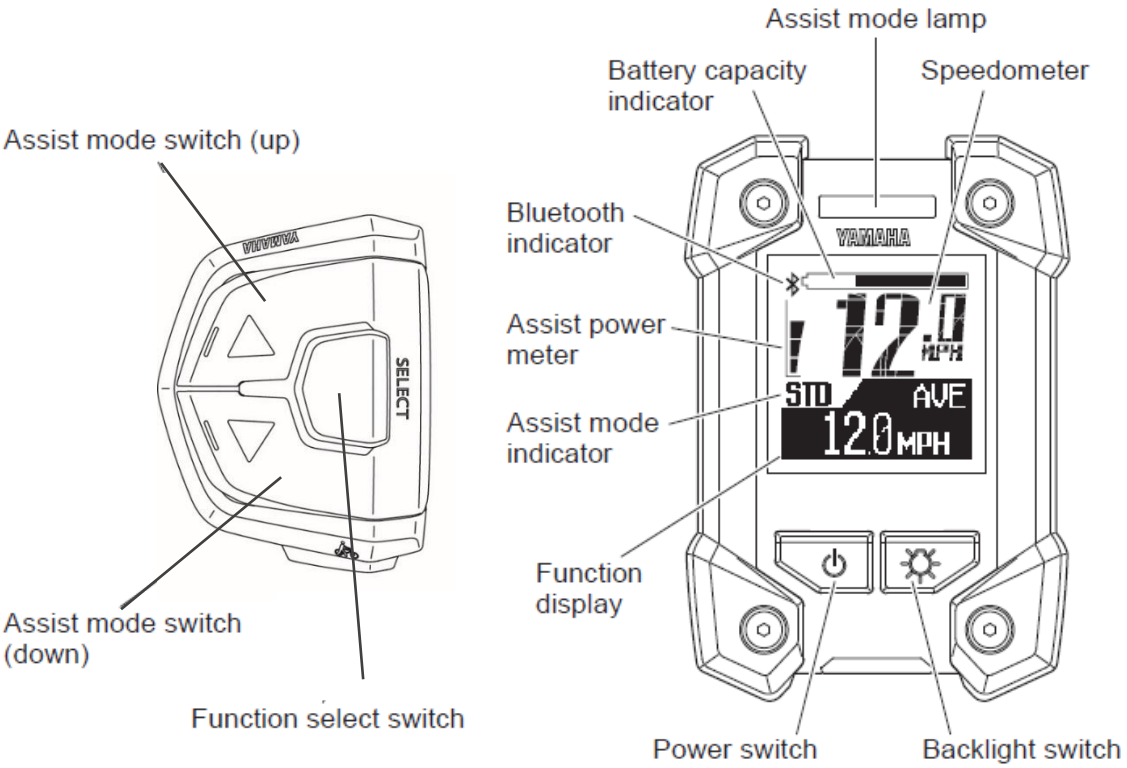


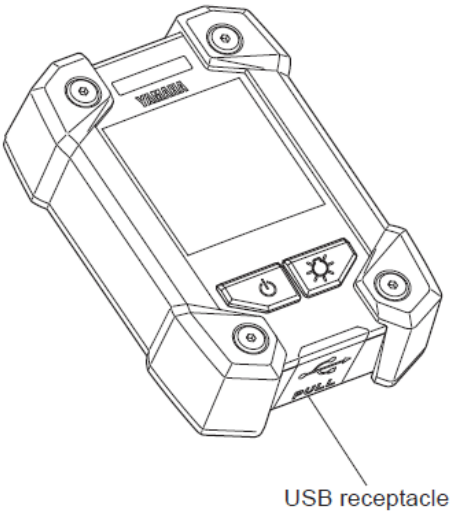

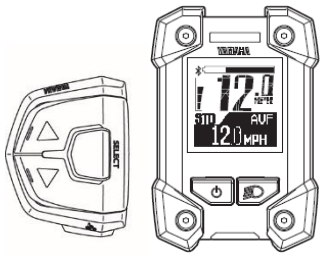


## Display unit

NOTICE

This device complies with part 15 of the FCC Rules and Industry Canada licence exempt RSS-247 standard. Operations is subject to the following two conditions (1) This device may not cause harmful interference, and (2) This device must accept any interference received, including interference that may cause undesired operation.

Cet appareil est conforme à la partie 15 des règles de la FCC et comporte un émetteur/récepteur exempt de l icence qui est conforme aux normes RSS d'exemption de licence de l'organisme Innovation, Science et Développement économique Canada. Le présent appareil est conforme aux CNR d'Industrie Canada applicables aux appareils radio exempts de licence. L'exploitation est autorisée aux deux conditions suivantes : (1) l'appareil ne doit pas produire de brouillage, et (2) l'utilisateur de l'appareil doit accepter tout brouillage radioélectrique subi, même si le brouillage est susceptible d'en compromettre le fonctionnement.

FCC ID : 2ADBKX1V
IC: 740A-X1V
CAN ICES-3 (B)/NMB-3 (B)

Brand name : YAMAHA
Product name : X1V Meter
Model no. : X1V00
Manufacturer name : YAMAHA MOTOR CO., LTD.

MADE IN CHINA

NOTICE

## Federal Communication Commission Interference Statement

This equipment has been tested and found to comply with the limits for a Class B digital device, pursuant to Part 15 of the FCC Rules. These limits are designed to provide reasonable protection against harmful interference in a residential installation. This equipment generates, uses and can radiate radio frequency energy and, if not installed and used in accordance with the instructions, may cause harmful interference to radio communications. However, there is no guarantee that interference will not occur in a particular installation. If this equipment does cause harmful interference to radio or television reception, which can be determined by turning the equipment off and on, the user is encouraged to try to correct the interference by one of the following measures:

- Reorient or relocate the receiving antenna.
- Increase the separation between the equipment and receiver.
- Connect the equipment into an outlet on a circuit different from that to which the receiver is connected.
- Consult the dealer or an experienced radio/TV technician for help.

## FCC Caution:

To assure continued compliance, any changes or modifications not expressly approved by the party responsible for compliance could void the user's authority to operate this equipment. (Example - use only shielded interface cables when connecting to computer or peripheral devices.)

## FCC Radiation Exposure Statement:

This equipment complies with FCC RF radiation exposure limits set forth for an uncontrolled environment.

This transmitter must not be co-located or operating in conjunction with any other antenna or transmitter.

## IC Radiation Exposure Statement:

This equipment complies with IC RSS-102 radiation exposure limits set forth for an uncontrolled environment.

This equipment should be installed and operated with minimum distance 0.5 cm between the radiator and your body.

## Déclaration d'exposition à la radiation:

Cet équipement respecte les limites d'exposition aux rayonnements IC RSS-102 définies pour un environnement non contrôlé. Cet équipement doit être installé et mis en marche à une distance minimale de 0.5 cm qui sépare l'élément rayonnant de votre corps.

---

The display unit offers the following operations and infor- mation displays.

## Installing the battery

The display unit needs to be removed and installed for changing the battery.

- Remove the two display bolts on back side of the clamp, and then remove the display unit.
- When installing the display unit, tighten the two display bolts from the back side of the clamp.

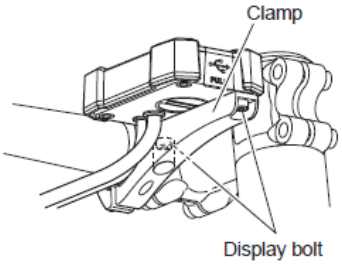


**WARNING**

Tighten the display bolts to 1.5–2.5 N·m (0.15–0.25 kgf·m, 1.1–1.8 lb·ft). Otherwise, during riding, vibration could cause the display bolts to come loose with the risk that the display unit may fall off. A loose display could distract the rider or interfere with control.

## Battery

Check if the rated battery (CR2032) is installed in the rear of the display unit.
If a battery is not installed, or if there is not sufficient battery power remaining, install a new battery.
To adjust the time, see "Stopwatch and settings".

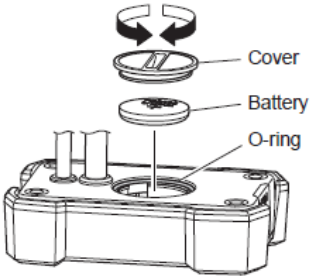


TIP

- Make sure that the O-ring is installed correctly.
- Use a new type CR2032 button cell battery (sold separately).
- When a battery is drained, whenever it turns on the vehicle power supply, the clock begins to count from 11:00. Please replace the battery, if such a condition appears.

## Adjusting the display angle

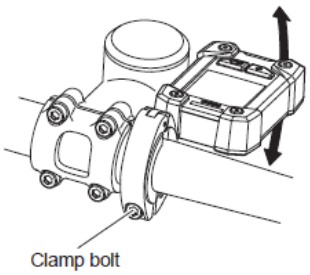


Adjust the display angle by loosening the clamp bolt. The angle depends on each rider.
After adjustment, tighten the clamp bolt.

**⚠ WARNING**

Tighten the clamp bolt to 3.0–4.5 N·m (0.30–0.45 kgf·m, 2.2–3-3 lb·ft). During riding, vibration could cause the clamp bolt to come loose with the risk that the clamp may fall off. A loose display could distract the rider or interfere with control.

## Power "On/Off"

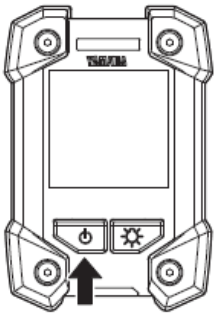

Each time you press the power switch, the power switches between "On" and "Off".
When you turn on the power, the animation will be displayed.
After that, the battery capacity indicator, speedometer, assist power meter, Bluetooth indicator, the function display, and "OFF" of assist mode indicator are displayed.

TIP

- When you turn on the power, the assist mode is automatically set to Off mode.
- Keep your feet off the pedals when turning on the display unit. Also, do not start riding immediately after turning on the display unit. Doing so could weaken the assist power. (Weak assist power in either of these cases is not a malfunction.) If you did either of the above by accident, remove your feet from the pedals, turn on the power again, and wait a moment (approximately two seconds) before starting to ride.

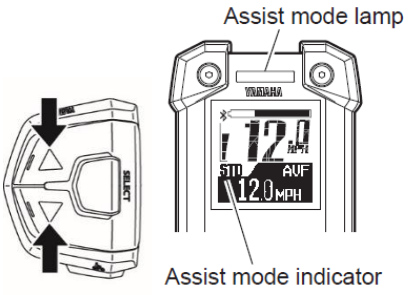


| Assist mode | Assist mode indicator | Assist mode lamp |
|---|---|---|
| EXPW | EXPW | Yellow |
| ▲▼ | | |
| HIGH | HIGH | Blue |
| ▲▼ | | |
| STD | STD | Blue |
| ▲▼ | | |
| ECO | ECO | Green |
| ▲▼ | | |
| +ECO | +ECO | Green |
| ▲▼ | | |
| OFF | OFF | Hide |

## Displaying and switching the assist mode

You can select the assist mode by using the assist mode switches (up & down).
The selected assist mode is displayed by the assist mode indicator and assist mode lamp color.

- When you press the assist mode switch (up), the mode changes from “OFF” to “+ECO”, or “+ECO” to “ECO”, or “ECO” to “STD”, or “STD” to “HIGH”, or “HIGH” to “EXPW”.
- When you press the assist mode switch (down), the mode changes from “EXPW” to “HIGH”, or “HIGH” to “STD”, or “STD” to “ECO”, or “ECO” to “+ECO” or “+ECO” to “OFF”.

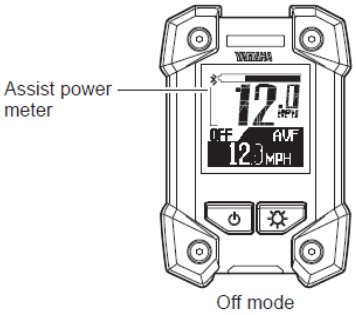


TIP

- Further pressing of the assist mode switch will not cycle the assist mode selections.
- In the Off mode, the assist power meter are not displayed.
- You can keep the assist mode lamp unlit.
  For more information, see “Stopwatch and settings”.

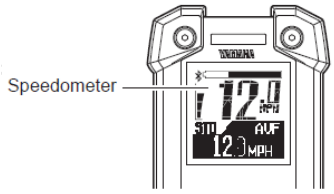


## Speedometer

The speedometer displays your bicycle speed (in mile per hour or kilometer per hour). To select the mile/km, see “Stopwatch and settings”.

TIP

If your bicycle speed is less than 0.3 MPH or 0.5 km/h, the speedometer displays “0.0 MPH” or “0.0 km/h”.

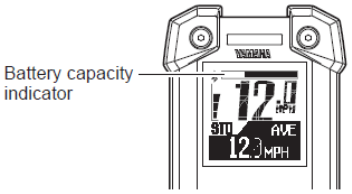


## Battery capacity indicator

The battery capacity indicator displays an estimate of how much capacity is left in the battery.

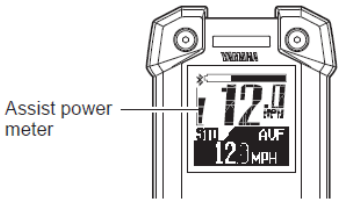


## Assist power meter

The assist power meter displays an estimate of the assist power during riding.
When the e-Bike Systems are not in operation, none of the segments of the assist power meter are displayed.
When the e-Bike Systems are operating, as the assist power increases, the segments of the assist power meter are added one by one.

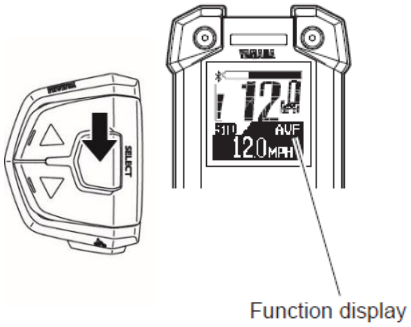


## Function display

The function display can display the following functions.

- Odometer
- Trip meter
- Average bicycle speed
- Maximum bicycle speed
- Remaining assist distance
- Battery capacity (%)
- Cadence
- Clock

Push the function select switch, the display changes as follows:
Odometer → Trip meter → Average bicycle speed → Maximum bicycle speed → Remaining assist distance → Battery capacity (%) → Cadence → Clock → Odometer

You can select the items to be displayed.
For more information, see "Stopwatch and settings".
You can reset the data for trip meter, average bicycle speed, and maximum bicycle speed.
For more information, see "Stopwatch and settings".

## Odometer

This displays the total distance (in miles or kilometers) ridden while the power was on.
The odometer cannot be reset.

## Trip meter

This displays the total riding distance (in miles or kilometers) since it was last reset.
When you turn off the power, the data up to that point will remain in the display.
For the procedure of resetting the trip meter to measure a new distance travelled, see "Stopwatch and settings".

## Average bicycle speed

This displays the average bicycle speed (in miles per hour or kilometers per hour) since it was last reset.
When you turn off the power, the data up to that point will remain in the display.
For the procedure of resetting the average bicycle speed, see "Stopwatch and settings".

## Maximum bicycle speed

This displays the maximum bicycle speed (in miles per hour or kilometers per hour) since it was last reset.
When you turn off the power, the data up to that point will remain in the display.
For the procedure of resetting the maximum bicycle speed, see "Stopwatch and settings".

## Remaining assist distance

This displays an estimate of the distance (in miles or kilometers) that can be ridden with assist on the residual battery capacity of the battery installed. If you switch the assist mode when the remaining assist distance is displayed, the estimate of the distance that can be ridden with assist changes.
The remaining assist distance estimate cannot be reset.

TIP

- The remaining assist distance changes depending on the riding situation (hills, headwind, etc.) and as the battery runs down.
- If in Off mode, "- - - -" is displayed.

## Battery capacity (%)

This displays the power remaining in the battery.
The residual battery capacity display cannot be reset.

## Cadence

This displays your pedaling speed in revolutions per minute.
The pedaling cadence display cannot be reset.

TIP

If you pedal in backward, “0” is displayed.

## Clock

Displays the current time in 24 hour format. To adjust the time, see “Stopwatch and settings”.

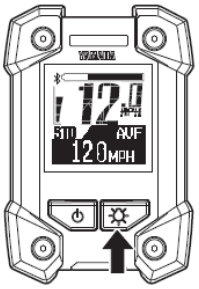


## Backlight

Each time the backlight switch is pressed, the backlight of the function display repeats on and off.

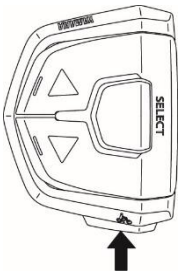


## Pushing assist

When you are on or off the bicycle and start moving it, you can use pushing assist without pedaling the bicycle.
To use pushing assist, press and hold the pushing assist switch.

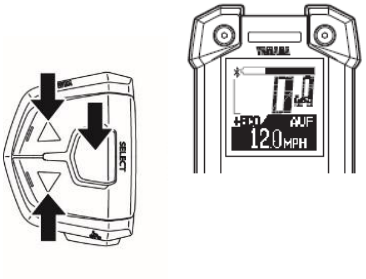


## Stopwatch and settings

The display enables the following.

- STOPWATCH
  Stopwatch function
- TIME ADJ (TIME ADJUST)
  Clock setting
- DIST UNIT (DISTANCE UNIT)
  mile/km setting
- DSPL ITEM (DISPLAY ITEM)
  Sets the items to be displayed in the function display during normal riding.

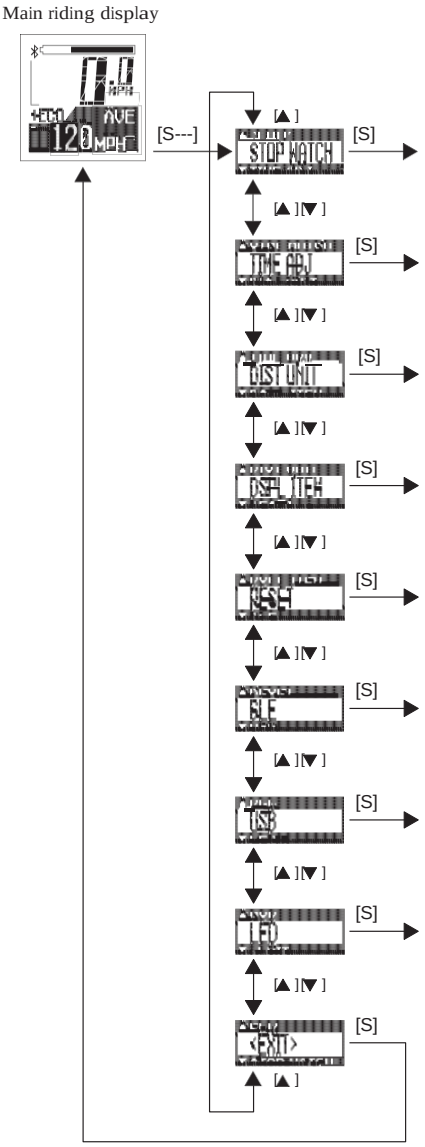


- RESET
  Resets the values of the trip meter, average bicycle speed, and maximum bicycle speed.
- BLE (Bluetooth low energy technology)
  Switches the profiles and turns off the wireless function.
- USB
  Switches the USB receptacle between a power supply port and a wired communication port.
- LED
  Changes between lighting the assist mode lamp and keeping the assist mode lamp unlit.

1. Press the function select switch for 2 seconds or longer.
2. Select an item by using the assist mode switches (up & down).
   Press the function select switch at the displayed item that you want to select, and the selected item will then be displayed.
   Selecting “EXIT” returns to the main riding display.

**⚠ WARNING**

For all setting procedures, be sure to stop the bicycle and perform the required settings in a safe location. Otherwise, lack of attention to surrounding traffic or other hazards could cause an accident.

[S---] ···· Press the function select switch for 2 seconds or longer
[S] ····· Press the function select switch
[▲] ····· Press the assist mode switch (up)
[▼] ····· Press the assist mode switch (down)

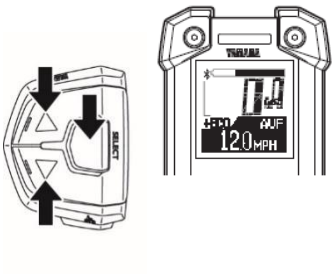


## STOPWATCH

The stopwatch counts time in seconds up to a maximum of 9 hours 59 minutes 59 seconds.
If this maximum is reached, it will automatically start over from 0 (zero) and continue counting.

- TIME MEASUREMENT
  Use the function select switch to start and stop time measurement.
  Press the function select switch for 2 seconds or longer to “RESET” the measured time.
- RESET
  When the function select switch is pressed, the measured time will be reset and the measuring display will be shown.
  Use the assist mode switches (up & down) to go to the “EXIT” display.
- EXIT
  When the function select switch is pressed, the display will return to the main riding display.
  Use the assist mode switches (up & down) to go to the “RESET” display.

TIP

- It is possible to return to the main riding display without interrupting time measurement.
- When the power is turned off, the measured time will be reset.

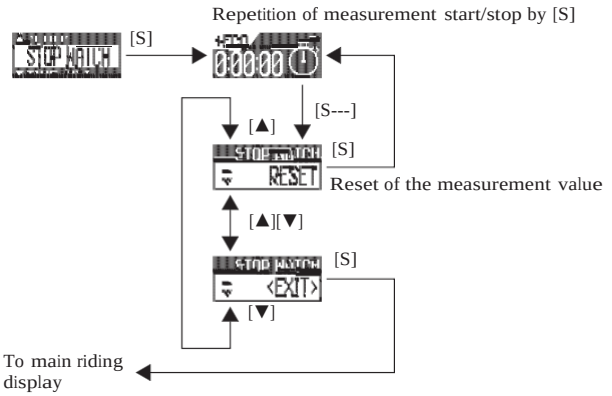

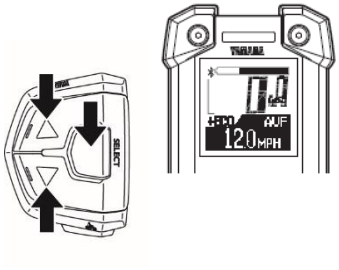


## TIME ADJ (TIME ADJUST)

You can adjust the time of the clock.

1. Check that the “Hour” is flashing and adjust the hour by using the assist mode switches (up & down).
2. Press the function select switch to adjust the minutes.
3. Check that the “Minute” is flashing and adjust the minutes by using the assist mode switches (up & down).
4. Press the function select switch to return to the main riding display.

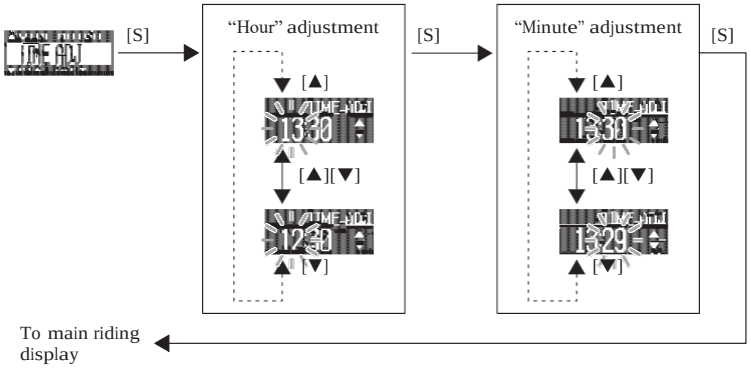


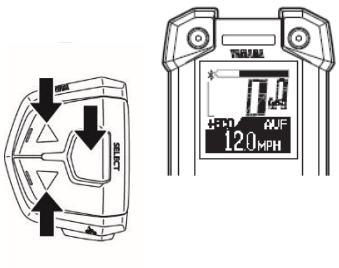


## DIST UNIT (DISTANCE UNIT)

You can select the display units for distance and speed.
When “mile” is selected, the travelled distance will be indicated in miles and the speed in mph.
When “km” is selected, the travelled distance will be indicated in kilometers and the speed in km/h.

1. Select “mile” or “km” by using the assist mode switches (up & down).
2. Press the function select switch when the desired unit is indicated in the display. This setting will then be kept and the display will return to the main riding display.

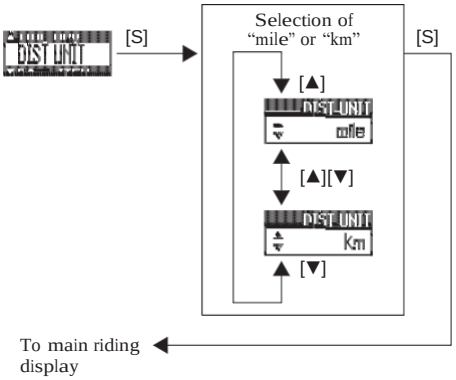

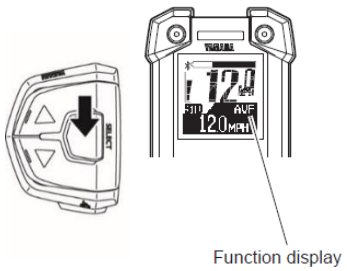


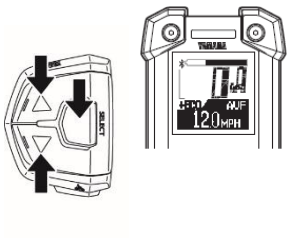

## DSPL ITEM (DISPLAY ITEM)

You can select to show or hide different items in the function display during normal riding.
The items which you can select to show or hide are: TRIP (trip meter), AVE (average bicycle speed), MAX (maximum bicycle speed), DIST (remaining assist distance), BATTERY (battery capacity (%)), CADENCE (cadence), and TIME (clock).

TIP

You cannot hide the odometer indication.

1. Select an item by using the assist mode switches (up & down).
2. Use the function select switch to show or hide the selected item. (When an item is shown, a check mark will be shown in the check box.)
3. When you press the function select switch in the "EXIT" display, the setting will be kept and the display will return to the main riding display.

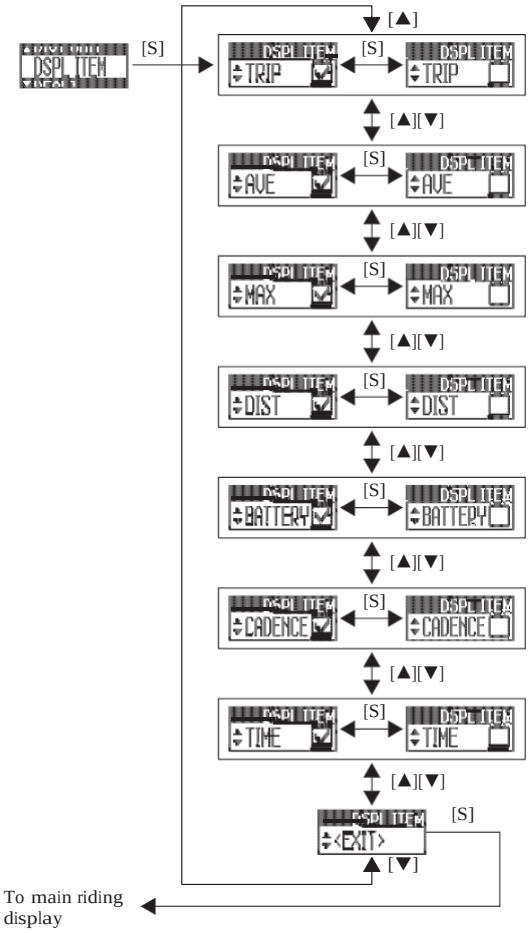

## RESET

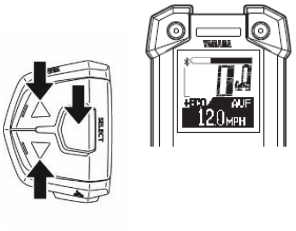

You can reset the TRIP (trip meter), AVE (average bicycle speed), and MAX (maximum bicycle speed) values.

TIP

You cannot reset the odometer.

1. Select an item by using the assist mode switches (up & down) and use the function select switch to place a check mark in the check box for the item that you want to reset.
2. When you press the function select switch in the "EXIT" display, the items with check marks will be reset and the display will return to the main riding display.

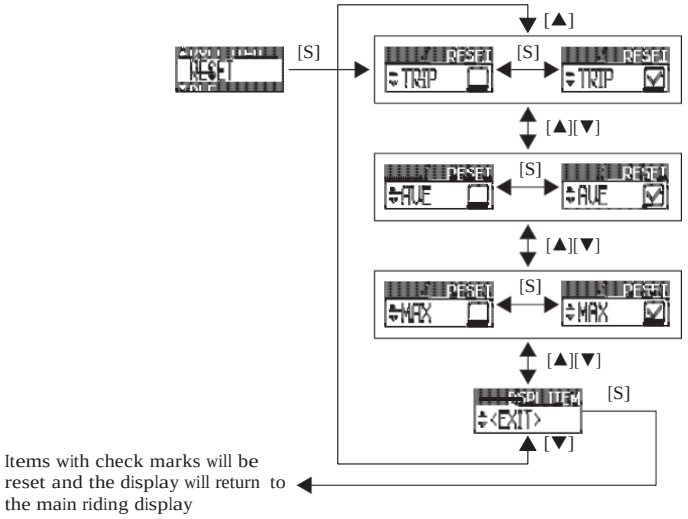


## BLE (Bluetooth low energy technology)

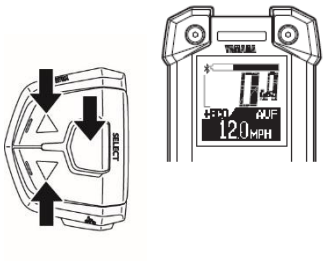

You can set the profile to use the wireless function with Bluetooth low energy technology, or you can select not to use the wireless function.
When "CSCP" is selected, the Cycling Speed and Cadence Profile will be available.
When "CPP" is selected, the Cycling Power Profile will be available.
When "OFF" is selected, the wireless function will be inactive.

TIP

- Set the profile according to the wireless communication equipment that communicates via Bluetooth low energy technology.
- For the output power level of each profile, see "Specifications".
- Even if the power is turned off, the setting will be kept. When the power is turned on the next time, the last used setting will be selected.

1. Select “CSCP”, “CPP”, or “OFF” by using the assist mode switches (up & down).
2. When you press the function select switch at the desired item display, the setting will be kept and the main riding display will be shown.

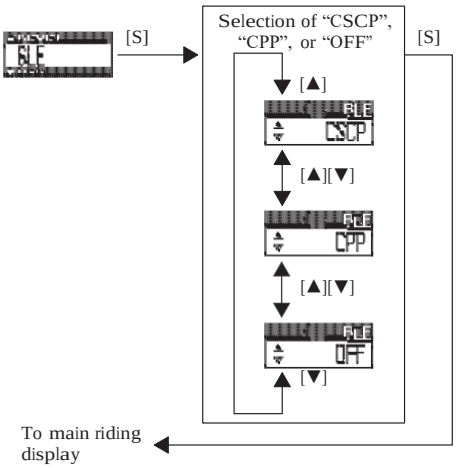


## USB

You can use the USB receptacle as a power supply.

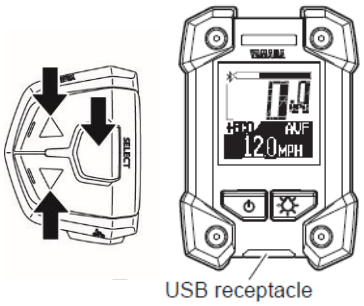


TIP

- Normally you should not use “COMM” because this is a service mode used for wired communication.
- When the power is turned off, the mode automatically changes to “PWR SPLY”.

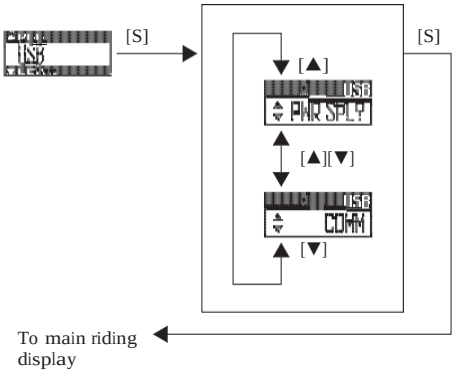

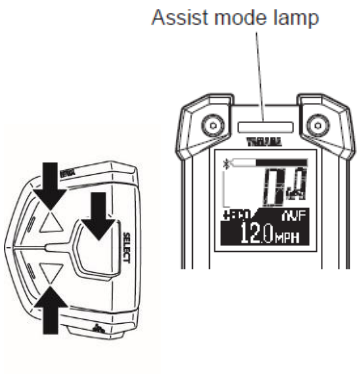


## LED

You can select to light up the assist mode lamp according to the assist mode or keep the assist mode lamp unlit all the time.
When “ON” is selected, the assist mode lamp will light up according to the assist mode.
When “OFF” is selected, the assist mode lamp will remain unlit all the time.

TIP

Even if the assist mode lamp is set to “OFF”, it will light up in red if an error occurs.

1. Select “ON” or “OFF” by using the assist mode switches (up & down).
2. When you press the function select switch at the desired item display, the setting will be kept and the main riding display will be shown.

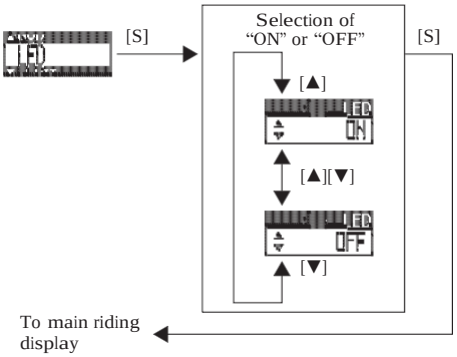


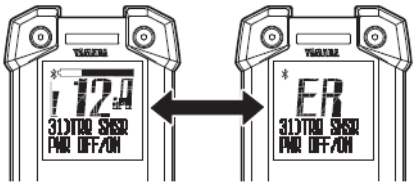


Displays alternately

## Diagnosis mode

The e-Bike Systems are equipped with a diagnosis mode. If a malfunction or fault occurs in the e-Bike Systems, the assist mode lamp will light up in red, and the main riding display and “ER” will be shown alternately, while an error description will inform you of the type of error in the function display. See “Troubleshooting” regarding symptoms and remedies for abnormal displays and abnormal flashing.

**⚠ WARNING**

If the problem cannot be solved, have your bicycle inspected by a dealer as soon as possible.

TIP

Even if the assist mode lamp is set to “OFF”, it will light up in red if a malfunction or fault occurs.

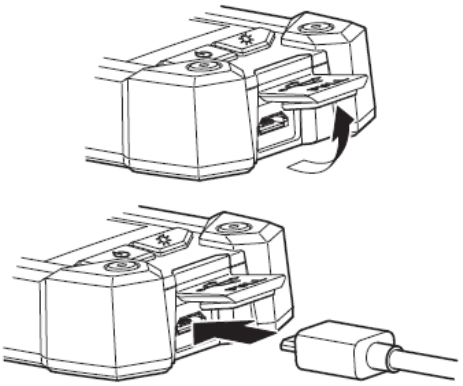

## Power supply to external devices

Power can be supplied to most external devices (e.g. various smart phones etc.) by connecting a commercial USB 2.0 OTG cable.

[To supply power]

1. Open the USB receptacle cap of the display.
2. Connect the USB cable to the display and external device.
3. Turn on the power of the vehicle.

[To stop the power supply]

1. Turn off the power of the vehicle.
2. Disconnect the USB cable and put on the cap of the USB receptacle.

NOTICE

- Do not apply unreasonable force on the USB plug or pull the USB cable.
- Check that the USB plug is facing the right way and not totally out-of-position with the USB receptacle or slanted, and make sure it is fully inserted all the way in.
- Do not connect the USB receptacle and the USB plug in a wet state.
- Use a USB 2.0 OTG cable that conforms to the standards.
- Do not insert foreign objects into the USB receptacle unit.

Otherwise the display unit and external device may malfunction.

TIP

- Power is supplied automatically when an external device is connected with the USB cable.
- No power is supplied if the remaining capacity of the battery pack is low.
- The power supply of the vehicle will go off and power supplied by the USB connection will also stop if the vehicle is not operated for 5 minutes.

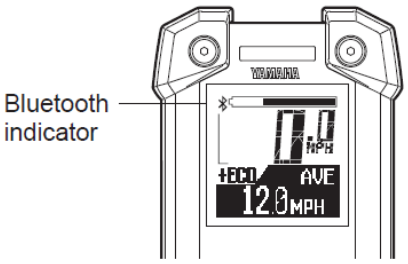


## Communication with Bluetooth low energy technology

The wireless equipment corresponding to the CSCP or CPP profiles can provide the communication via Bluetooth low energy technology.

1. Set the profiles of the display unit by referring to "Stopwatch and settings".
   Also confirm that they are in accordance with the connection settings of your wireless communication equipment.
2. Check that the Bluetooth indicator is displayed.
3. Select "Yamaha ####*" from the user menu of your wireless communication equipment.
   For more information, see the instruction manual of the wireless communication equipment.

* "####" of "Yamaha ####" is a combination of irregular alphanumeric characters.

TIP

- Keep the distance between the display and wireless communication equipment within 3 ft (1 m). The maximum communication distance of this equipment is 3 ft (1 m).
  If the wireless communication equipment is kept in a bag, etc., the actual communication distance might be shorter.
- Do not use the equipment in places with magnetic fields, static electricity, or electromagnetic interference. If the equipment is used near transmitters, broadcasting stations or the following type of equipment, wireless communication may not be possible.
  - Microwave ovens
  - Digital cordless phones
  - Wireless communication devices
  - Near other wireless equipment using the 2.4 GHz band.
- Do not cover the display with objects such as aluminum sheets that block the radio waves. Otherwise, wireless communication may not be possible.
- For the output power level of each profile, see the "Specifications".

## Checking the residual battery capacity

You can check the estimate of how much capacity is left in the battery and to what extent it is charged. The check can be performed using either the display unit's residual battery capacity indicator or the battery's residual battery capacity indicator lamps.

TIP

- Even if the battery's capacity reaches 0 (zero), you can still ride the bicycle as a regular bicycle.
- If you are using an old battery pack, the residual battery capacity indicator may suddenly display very little power when you start moving. This is not a malfunction. Once riding stabilizes and the load is reduced, the proper value is displayed.

## Residual battery capacity indicator display and estimate of residual battery capacity for display unit

The residual battery capacity can be displayed as a numerical value on the display unit.

| Display of the residual battery capacity for the display unit | Display of the residual battery capacity | Applicable situation |
|---|---|---|
| | 100–11 % | When you turn on the power of the display unit and ride continually after the battery is fully charged, the segments for the residual battery capacity indicator go out one by one each time the residual battery capacity is reduced by 10 %. |
| Slow flashing <every 0.5 seconds> | 10–1 % | There is very little residual battery capacity left. Please charge the battery soon. |
| Fast flashing <every 0.2 seconds> | 0 % | There is no more residual battery capacity. Turn off the power for the display unit and charge the battery pack soon.<br>* Assist is stopped, but you can still ride the bicycle as a regular bicycle. |

# L. Consumer information

## Disposal

The Drive Unit, battery pack, battery charger, display unit, speed sensor set, accessories and packaging should be sorted for environmental-friendly recycling.
Do not dispose of the bicycle or its components as household waste.

**⚠ WARNING**

Do not dispose of the battery pack in a fire or expose it to a heat source. Doing so could cause fire, or explosion, resulting in serious injury or property damage.

You may recycle your battery pack by calling 1-800-822-8837.

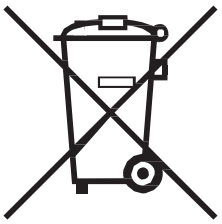

## For EU countries:

According to the European Guideline 2012/19/EU, electrical devices/tools that are no longer usable, and according to the European Guideline 2006/66/EC, defective or used battery packs/batteries, must be collected separately and disposed of in an environmentally correct manner.
Please return battery packs that are no longer usable to an authorized bicycle dealer.

# Troubleshooting

## E-Bike Systems

| Symptom | Check | Action |
|---|---|---|
| The assist mode lamp lights up in red, the main riding display and “ER” are displayed alternately, and an error description is indicated in the function display.<br> 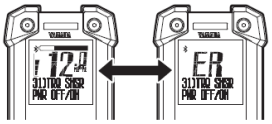 <br>Displays alternately<br> <br>Error displays | | There is a problem in the e-Bike Systems. Turn off the power and then turn it on again.<br>If the problem cannot be solved, have your bicycle inspected by a dealer as soon as possible. |
| The display unit shuts down immediately (approx. 4 seconds later) after switching the power on. | Are the bicycle’s battery pack connection terminals dirty? | Remove the battery pack, clean the bicycle’s terminals with a dry cloth or cotton swab, and then install the battery pack again. |
| Traveling range has decreased. | Are you fully charging the battery pack? | Charge the battery pack until full (F). |
| | Are you using the system under low-temperature conditions? | Normal traveling range will be restored when the ambient temperature rises. Additionally, storing the battery pack indoors (in a warm location) before use will improve traveling range under cold conditions. |
| | Is the battery pack worn out? | Replace the battery pack. |

| Symptom | Check | Action |
|---|---|---|
| An assist mode lamp lights up in red and an error description is indicated in the function display.<br> <br><br> <br><br>Error displays | | The speed sensor cannot detect a correct signal.<br>Turn off the power to the display unit and then turn it on again.<br>Select the assist mode and then ride for a short distance.<br>Also, make sure the magnet is mounted correctly on the spokes of the wheels. |
| The assist mode indicator and function display are flashing. (Power assist is stopped.) | | This is not a malfunction. It is in a state that the operation of the power assist system is normal. This state may occur depending on the pedaling strength and riding speed, but it returns to normal condition if it is confirmed that the system is normal. |

## Power supply of external devices via USB connection

| Symptom | Check | Action |
|---|---|---|
| Power is not supplied. | Is the display unit's power on? | Press the power switch on the display unit to turn the power on. |
| | Is the USB version correct? | Use an external device that complies with USB 2.0. |
| | Is the USB cable type correct? | Use an OTG cable. Also connect the host side to the display. |
| | Is the USB cable firmly connected? | Re-connect the USB cable. |
| | Is the USB receptacle or USB plug terminal dirty or wet? | Disconnect the USB cable from the display unit and external device. Remove the dirt and water on the USB receptacle and USB plug terminal and re-connect the cable. |
| | Is USB setting set to "COMM"? | Set the USB settings to "PWR SPLY" by referring to "Stopwatch and settings" or turn off the power and then turn it on again. |

## Wireless communication with Bluetooth low energy technology

| Symptom | Check | Action |
|---|---|---|
| Wireless communication cannot be used. | Are both the wireless communication settings of the display unit and your wireless communication equipment turned on? | Set the communication profiles by referring to "Stopwatch and settings", and then set the correct communication profiles of the wireless equipment or application software. |
| | Are the communication profiles of the wireless equipment or application software that communicates wirelessly with the communication profiles of the display correct? | |
| The display values of the external wireless communication equipment are wrong. | Did you change the settings of the communication profiles? | Reset pairing for a moment, set the communication profiles of the display, and then establish pairing again.<br>For resetting of pairing and the procedure of establishing pairing, refer to the instruction manual supplied with the wireless communication equipment. |

## Specifications

| | | |
|---|---|---|
| Display unit (Power supply portion) | USB receptacle type | USB2.0 Micro-B |
| | Output current | Max. 1000 mA |
| | Rated voltage | 5 V |

| | | |
|---|---|---|
| Display unit (Wireless communication portion) | Communication system | Bluetooth version 4.0 (Bluetooth low energy technology) |
| | Output power | –9.27 dBm (e.i.r.p.) |
| | Communication range | Line-of-sight distance approx. 3 ft (1 m) without interference |
| | Frequency band | 2.4 GHz band (2.400–2.4835 GHz) |
| | Modulation method | GFSK |
| | Supported profiles | CSCP*1<br>CPP*2 |
| Display unit (Product information) CE | Model No. | X1V00 |
| | Manufacturer | YAMAHA MOTOR CO., LTD.<br>2500 Shingai, Iwata, Shizuoka<br>438-8501, Japan |
| | Trade mark/Trade name | YAMAHA |

*1 CSCP (Cycling Speed and Cadence Profile)
Corresponds to the wheel revolution data and crank revolution data.

*2 CPP (Cycling Power Profile)
Corresponds to the wheel revolution data, crank revolution data, instantaneous power, and accumulated energy.

- Communication is not necessarily guaranteed with all wireless communication devices that have the same profiles as this system.
  Even when a device complies with the specification for Bluetooth low energy technology, there may be cases where the characteristics, specifications, or communicative environment of the device with this technology make it impossible to connect, or may result in different control methods, display or operation.
- YAMAHA MOTOR CO., LTD. can not be held liable in any way for damages or other loss resulting from information leaks during the communication via Bluetooth low energy technology.