LIBRE
WIRELESS TECHNOLOGIES

LIBRE SYNC

User Manual

Module : LS5B

Rev: 1.0

Libre Wireless Technologies © 2015

Libre Confidential

Libre Wireless Technologies Private Limited

librewireless.com

Copyright © 2015 Libre Wireless Technologies. All rights reserved.

Circuit diagrams and other information relating to Libre Wireless Technologies products are included as a means of illustrating typical applications. Consequently, complete information sufficient for construction purposes is not necessarily given. Although the information has been checked and is believed to be accurate, no responsibility is assumed for inaccuracies. Libre Wireless Technologies reserves the right to make changes to specifications and product descriptions at any time without notice. Contact your local Libre Wireless Technologies sales office to obtain the latest specifications before placing your product order. The provision of this information does not convey to the purchaser of the described semiconductor devices any licenses under any patent rights or other intellectual property rights of Libre Wireless Technologies or others. All sales are expressly conditional on your agreement to the terms and conditions of the most recently dated version of Libre Wireless Technologies standard Terms of Sale Agreement dated before the date of your order (the "Terms of Sale Agreement"). The product may contain design defects or errors known as anomalies which may cause the product's functions to deviate from published specifications. Anomaly sheets are available upon request. Libre Wireless Technologies products are not designed, intended, authorized or warranted for use in any life support or other application where product failure could cause or contribute to personal injury or severe property damage. Any and all such uses without prior written approval of an Officer of Libre Wireless Technologies and further testing and/or modification will be fully at the risk of the customer. Copies of this document or other Libre Wireless Technologies literature, as well as the Terms of Sale Agreement, may be obtained by visiting Libre Wireless Technologies website.

LIBRE WIRELESS TECHNOLOGIES DISCLAIMS AND EXCLUDES ANY AND ALL WARRANTIES, INCLUDING WITHOUT LIMITATION ANY AND ALL IMPLIED WARRANTIES OF MERCHANTABILITY, FITNESS FOR A PARTICULAR PURPOSE, TITLE, AND AGAINST INFRINGEMENT AND THE LIKE, AND ANY AND ALL WARRANTIES ARISING FROM ANY COURSE OF DEALING OR USAGE OF TRADE. IN NO EVENT SHALL LIBRE WIRELESS TECHNOLOGIES BE LIABLE FOR ANY DIRECT, INCIDENTAL, INDIRECT, SPECIAL, PUNITIVE, OR CONSEQUENTIAL DAMAGES; OR FOR LOST DATA, PROFITS, SAVINGS OR REVENUES OF ANY KIND; REGARDLESS OF THE FORM OF ACTION, WHETHER BASED ON CONTRACT; TORT; NEGLIGENCE OF LIBRE WIRELESS TECHNOLOGIES OR OTHERS; STRICT LIABILITY; BREACH OF WARRANTY; OR OTHERWISE; WHETHER OR NOT ANY REMEDY OF BUYER IS HELD TO HAVE FAILED OF ITS ESSENTIAL PURPOSE, AND WHETHER OR NOT LIBRE WIRELESS TECHNOLOGIES HAS BEEN ADVISED OF THE POSSIBILITY OF SUCH DAMAGES

FCC Statement：

This device complies with part 15 of the FCC Rules. Operation is subject to the following two conditions: (1) This device may not cause harmful interference, and (2) this device must accept any interference received, including interference that may cause undesired operation.

Changes or modifications not expressly approved by the party responsible for compliance could void the user's authority to operate the equipment.

NOTE: This equipment has been tested and found to comply with the limits for a Class B digital device, pursuant to Part 15 of the FCC Rules. These limits are designed to provide reasonable protection against harmful interference in a residential installation. This equipment generates, uses and can radiate radio frequency energy and, if not installed and used in accordance with the instructions, may cause harmful interference to radio communications. However, there is no guarantee that interference will not occur in a particular installation. If this equipment does cause harmful interference to radio or television reception, which can be determined by turning the equipment off and on, the user is encouraged to try to correct the interference by one or more of the following measures:

-- Reorient or relocate the receiving antenna.

-- Increase the separation between the equipment and receiver.

-- Connect the equipment into an outlet on a circuit different from that to which the receiver is connected.

-- Consult the dealer or an experienced radio/TV technician for help.

FCC Radiation Exposure Statement

The modular can be installed or integrated in mobile or fix devices only. This modular cannot be installed in any portable device, for example, USB dongle like transmitters is forbidden.

This modular complies with FCC RF radiation exposure limits set forth for an uncontrolled environment. This transmitter must not be co-located or operating in conjunction with any other antenna or transmitter. This modular must be installed and operated with a minimum distance of 20 cm between the radiator and user body.

If the FCC identification number is not visible when the module is installed inside another device, then the outside of the device into which the module is installed must also display a label referring to the enclosed module. This exterior label can use wording such as the following: Contains Transmitter Module FCC ID: 2ADBM-LS5B-N11S.

when the module is installed inside another device, the user manual of this device must contain below warning statements;

1. This device complies with Part 15 of the FCC Rules. Operation is subject to the following two conditions:

(1) This device may not cause harmful interference.

(2) This device must accept any interference received, including interference that may cause undesired operation.

2. Changes or modifications not expressly approved by the party responsible for compliance could void the user's authority to operate the equipment.

The devices must be installed and used in strict accordance with the manufacturer's instructions as described in the user documentation that comes with the product.

Any company of the host device which install this modular with limit modular approval should perform the test of radiated emission a nd spurious emission according to FCC part 15C:15.247 and 15.209 requirement, Only if the test result comply with FCC part 15C:15.247 and 15.209 requirement, then the host can be sold legally.

IC Statement

This device complies with Industry Canada's licence-exempt RSSs. Operation is subject to the following two conditions:

(1) This device may not cause interference; and

(2) This device must accept any interference, including interference that may cause undesired operation of the device.

Cet appareil est conforme aux CNR exemptes de licence d'Industrie Canada . Son fonctionnement est soumis aux deux conditions suivantes :

(1) Ce dispositif ne peut causer d'interférences ; et

(2) Ce dispositif doit accepter toute interférence , y compris les interférences qui peuvent causer un mauvais fonctionnement de l'appareil.

This modular complies with IC RF radiation exposure limits set forth for an uncontrolled environment. This transmitter must not be co-located or operating in conjunction with any other antenna or transmitter

If the IC number is not visible when the module is installed inside another device, then the outside of the device into which the module is installed must also display a label referring to the enclosed module. This exterior label can use wording such as the following: "Contains IC: 20276-LS5B-N11S"

when the module is installed inside another device, the user manual of this device must contain below warning statements;

1. This device complies with Industry Canada's licence-exempt RSSs. Operation is subject to the following two conditions:

(1) This device may not cause interference; and

(2) This device must accept any interference, including interference that may cause undesired operation of the device.

2. Cet appareil est conforme aux CNR exemptes de licence d'Industrie Canada . Son fonctionnement est soumis aux deux conditions suivantes :

(1) Ce dispositif ne peut causer d'interférences ; et

(2) Ce dispositif doit accepter toute interférence , y compris les interférences qui peuvent causer un mauvais fonctionnement de l'appareil.

The devices must be installed and used in strict accordance with the manufacturer's instructions as described in the user documentation that comes with the product

Table of Contents

1. Introduction 13

1.1. User Manual Insight 13

2. Libre Wireless Technologies' EVK 14

2.1. LS5B EVK Setup 14

3. Firmware Update 15

3.1. Single-Image Update 15

3.1.1. USB Method 15

3.2. Application Update 17

3.2.1. Network Method 17

3.2.2. USB Method 19

3.2.3. Internet Method 21

3.3. BSL Update 23

3.3.1. TFTP Method 23

3.4. U-Boot Update 25

3.4.1. TFTP Method 25

4. Configuring Non-Volatile-Item 27

4.1. Host Communication Over UART 28

4.2. Network Interface 29

4.2.1. Ethernet 29

4.2.2. Wi-Fi 29

4.2.3. Auto 29

4.3. SSID of DDMS-Zone in SA-Mode 29

4.4. DDMS-Zone Password 30

4.5. I2S LR-Clock 30

4.6. I2S M-Clock 30

4.7. ACP 31

4.8. Model Name 31

4.9. Manufacturer Name 31

4.10. Current Volume 32

4.11. WAC SSID 32

4.12. X-MODEM Packet Size 33

4.13. I2S Clock from Bluetooth Module 33

4.14. ACP Sharing 33

4.15. HOST BAUDRATE 34
4.16. DLNA Connection Close 34
4.17. Country 35
4.18. Serial Number 35
4.19. Model Number 36
4.20. Hardware Version 36
4.21. Firmware Version 36
4.22. Firmware Update Link 37
4.23. Firmware Download XML 37
4.24. Album Art Size 37
4.25. Spotify APP Key 38
5. Key Button Functionality 39
5.1. Setup Button (WAC / SAC / DDMS) 39
5.2. WPS / Factory Reset Key Button 39
6. Network Configuration 40
6.1. Wireless Network Setup Using WAC and SAC 40
6.1.1. Wireless Network Setup Using WAC 40
6.1.2. Wireless Network Setup Using SAC (Speaker Android Configuration) Method 41
6.1.3. WAC / SAC Trigger Behaviour in DDMS Mode and Non-DDMS Mode 45
6.2. Wireless Network Setup Using Webserver 47
6.2.1. Webpage Method 47
6.2.2. LS-Connect Method 49
6.2.3. Manual Configuration Method 50
6.3. Wireless Network Setup Using WPS Push-Button Method 51
6.3.1. WPS Trigger from Command Line 51
6.3.2. WPS Trigger from LUCI 51
6.3.3. WPS Trigger from Key Button 52
6.4. I-Device Wi-Fi Settings Sharing 52
7. Features 53
7.1. Libre APP for Android 53
7.2. DDMS 53
7.3. Software Security 54
7.4. Source Switching 54
7.5. Autosense of Audio CODEC 54
7.6. AUX-In Support 54
7.7. Airplay® 54
7.7.1. Password for Airplay Playback 55

7.8. DLNA ® / DMR 58
7.9. i-Device playback over USB 59
7.10. USB Playback 60
7.11. TCP / IP Tunneling 60
7.12. Device Name Configuration 61
7.13. Wi-Fi Scan Result 62
7.14. Switch between Wired and wireless modes 62
7.14.1. Switching to Wired Mode 62
7.14.2. Switching to Wireless Mode 63
7.15. Music Services 64
7.15.1. vTuner 64
7.15.2. TuneIn 64
7.15.3. QQ Music 65
7.15.4. Spotify Connect 67
7.15.5. Deezer 70
8. Data Sheet 71

Table of Figures

Figure 2-1: LS5B Module Peripherals 14
Figure 3-1: Firmware Upgrade Method Selection 18
Figure 3-2: Firmware Update Webpage 18
Figure 3-2: Firmware Update Confirmation webpage 19
Figure 3-3: Firmware Update Progress Page 19
Figure 3-3: Firmware Update Status 19
Figure 3-4: Firmware Upgrade Method Selection 20
Figure 3-5: BSL Update Terminal Warning Message Prompt 24
Figure 3-6: BSL Default IP Address 24
Figure 3-7: U-Boot Update Terminal Warning Message Prompt 26
Figure 3-8: U-Boot Default IP address 26
Figure 6-1: WAC Speaker Listed 40
Figure 6-5: Libre App 41
Figure 6-6: Libre APP, Main view 42
Figure 6-7: SAC Device List 42
Figure 6-8: SSID List 43
Figure 6-9: Libre APP Custom Dialog 43
Figure 6-10: Configuring the Speaker 44
Figure 6-11: Successful Configuration 44
Figure 6-12: Network Status 47
Figure 6-13: Network Configuration 48
Figure 6-14: Network Configuration using Static IP 49
Figure 6-15: Network Status in Webpage 50
Figure 6-16: Configure Network Manually 51
Figure 6-17: Wi-Fi settings sharing 52
Figure 7-1: DDMS Setup in webpage 53
Figure 7-2: AirPlay Stream 55
Figure 7-3: Password for Airplay 56

Figure 7-4: Enter Password for Streaming **57**
Figure 7-5: Disable Airplay Password **58**
Figure 7-6: Media Player Stream Menu **58**
Figure 7-7: Media Streaming Options **59**
Figure 7-9: Device Name Section **61**
Figure 7-10: Switch to Wired Mode **63**
Figure 7-11: Switch to Wi-Fi Mode **64**
Figure 7-12: QQ Music APP **65**
Figure 7-13: Login Screen **66**
Figure 7-14: Device Selection Option **66**
Figure 7-15: Device List **67**
Figure 7-16: Spotify APP **68**
Figure 7-17: Spotify Login Screen **69**
Figure 7-18: Device Selection **69**
Figure 7-19: Device List **70**

Document Revision History

Revision	Date	Description of change
1.0	September 21, 2015	

1. Introduction

Libre Wireless provides evaluation kits (EVK) for users to gain familiarity with our products and expedite their own design and development. User can connect to LS5B module through RS232 UART, SD card, USB, or wireless interface to configure the module, manage the on board device on the module, and perform functional test.

1.1. User Manual Insight

This document provides information on the procedures to be followed while using LibreSync for various purpose such as

- Firmware update
- Configuring NV-item
- Key Button Functionality
- Network Configuration
- Streaming Airplay® / DLNA® / DMR
- Libre APP
- DDMS
- Source Switching
- Aux-In Support
- TCP / IP Tunneling
- Device Name Configuration
- Music Services (Spotify Connect, QQ Music, Vtuner, TuneIn, Melon, Deezer)

2. Libre Wireless Technologies' EVK

Figure 2-1 Marks different components of the LS5B Module

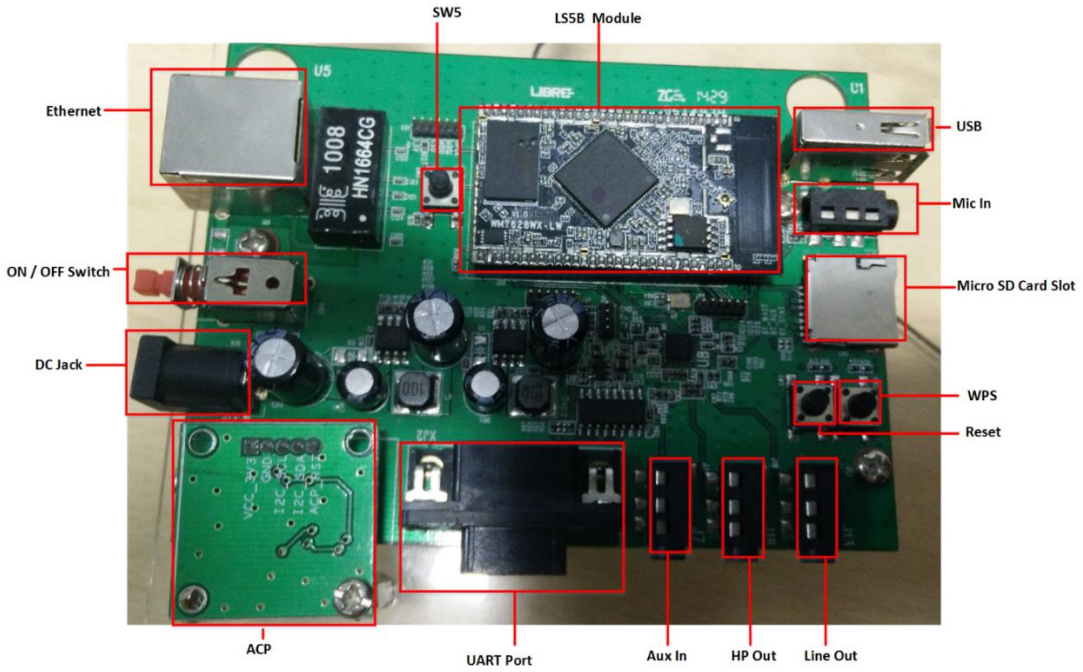

Figure 2-1: LS5B Module Peripherals

2.1. LS5B EVK Setup

To setup the LS5B EVK and get started proceed as below

Step 1. Ensure the LS5B module is inserted in the EVK

Step 2. Connect the USB-to-Serial Cable from Serial port of EVK to USB port of Laptop

Step 3. Connect the Power adaptor to DC Jack on EVK

Step 4. Power On the EVK, using ON/ OFF Switch

Step 5. Open the terminal tool (Hyper Terminal / Teraterm) on your laptop

Step 6. Configure the Serial settings, as below

- Baud Rate at 57600
- Data Bits at 8
- Parity at None
- Stop Bits at 1

3. Firmware Update

The Firmware Update process, facilitates update of U-Boot, BSL, and Application images individually, or all of them together (Single-Image) to the LS-Module.

LSx Platform supports following Sources of Firmware-Image and Interfaces to trigger the upgrade activity:

- **Image Source**: USB, Internet, or Network
- **Trigger Interfaces**: Shell-Command, or Webpage

To know the firmware version and Release date, execute the following command "#getprop" in the shell:

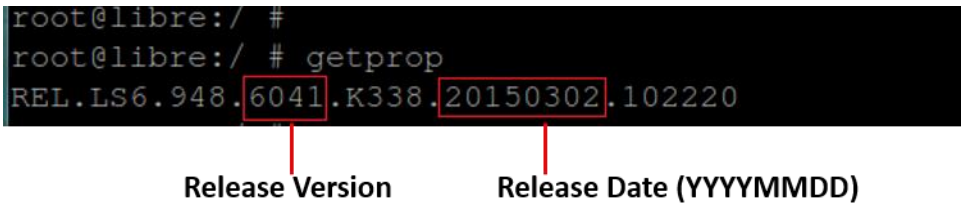

3.1. Single-Image Update

Single-Image binary file named, **"lsimage"** is released to customers on Libre Portal. The "**lsimage"** contains U-Boot, Factory-ENV, BSL, and Application.

Customers can update the Single-Image via USB / Internet / Network method. USB Method of update is the fastest method and is recommended.

3.1.1. USB Method

To update the Single-image binary file (File name: lsimage) on the LS5B module from USB based on a trigger from Command-Shell, proceed as below:

Steps:

Step 1. Ensure the name of binary file as "**lsimage"** and place the firmware image in root directory of USB drive.

> **Note:** The Firmware image should not contain any extension.

Step 2. Insert the USB to the LS5B EVK

Step 3. Execute command ***#fwupgrade*** in the device terminal (Shell Interface) to initiate the firmware upgrade from USB

```
root@libre:/ #
root@libre:/ # fwupgrade
```

The firmware upgrade process proceeds as below:

```
root@libre:/ #
root@libre:/ #
root@libre:/ # fwupgrade
E/          ( 1105): ENV : Callback registered : 0
E/LUCI_DISCOVERY(  519): makeLSSDPPacket ---Libre1Dfcc
E/LUCI_DISCOVERY(  519): SendAliveNotify
Restarting system.


U-Boot 1.1.3 (Dec 17 2014 - 21:46:16)

Board: Ralink APSoC DRAM:  64 MB
enable ephy clock...done. rf reg 29 = 5
SSC disabled.
******************************
Software System Reset Occurred
******************************
spi_wait_nsec: 29
spi device id: c2 20 18 c2 20 (2018c220)
find flash: MX25L12805D
*** Warning - bad CRC, using default environment

=========================================
LIBRE UBoot Version: 0.0.0.2
-----------------------------------------
ASIC 7620_MP (Port5<->None)
DRAM component: 512 Mbits DDR, width 16
DRAM bus: 16 bit
Total memory: 64 MBytes
Flash component: SPI Flash
Date:Dec 17 2014  Time:21:46:16
=========================================
icache: sets:512, ways:4, linesz:32 ,total:65536
dcache: sets:256, ways:4, linesz:32 ,total:32768
register 0xabcdeeee


: BOOTING BSL
## Booting image at bc050000 ...
raspi_read: from:50000 len:40
   Image Name:   Libre BSL Image
   Image Type:   MIPS Linux Kernel Image (lzma compressed)
   Data Size:    1739288 Bytes =  1.7 MB
   Load Address: 80000000
   Entry Point:  8000c1a0
raspi_read: from:50040 len:1a8a18
   Verifying Checksum ... OK
   Uncompressing Kernel Image ... OK

Starting kernel ...

L I B R E        F A I L S A F E        B O O T - L O A D E R
```

The LS5B looks for valid firmware image in USB drive. Once the image is found, firmware upgrade continues as shown in the image below with indication of the firmware upgrade progress.

```
L I B R E        F A I L S A F E        B O O T - L O A D E R

# ENV : Config env processed successfully
hostpresent:0,
No host present
Upgrade Method=generic
Generic FW upgrade
Checking for SD card
mounting sdcard
211:Image not found,reboot
Checking for USB
mounting usb
get the first partition: /media/sda1
factory_reset=0
CRC match
CNE image found flashing from /mnt/Env
Writing from /mnt/Env to FENV ...


FENV Flashed!!!!
BSL image found flashing from /mnt/BSL
Libre BSL Image

Writing from /mnt/BSL to BSL ...

Progress:=100%

BSL Flashed!!!!
APP image found flashing from /mnt/Application
Libre APP Image

Writing from /mnt/Application to Application ...

Progress:=10%
```

3.2. Application Update

The Application-Image used to update the firmware is a binary file. Application on LS module can be updated in the following ways

- Network Method
- USB Method
- Internet Method

3.2.1. Network Method

To update the binary file (Application-Image or Single-Image) on the LS5B module over network proceed as below

> **Note:** Make sure the LS5B EVK and your laptop / PC is connected to the same network.

Steps

Step 1. Execute command **#netcfg** in the device terminal to know the device IP
For Example, *10.0.1.13*

```
root@android:/ # netcfg
lo       UP                                  127.0.0.1/8    0x00000049 00:00:00:00:00:00
p2p0     DOWN                                  0.0.0.0/0    0x00001002 cc:d2:9b:fe:d6:33
eth0     DOWN                                  0.0.0.0/0    0x00001002 00:0c:43:76:20:77
wlan0    UP                                 10.0.1.13/24    0x00001043 cc:d2:9b:fe:d6:32
root@android:/ #
```

Step 2. Enter the IP in the address bar of your browser.
For Example, *10.0.1.13*

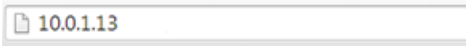

Step 3. In the Firmware upgrade section, Select Method as ***Network*** and Click ***Upgrade***

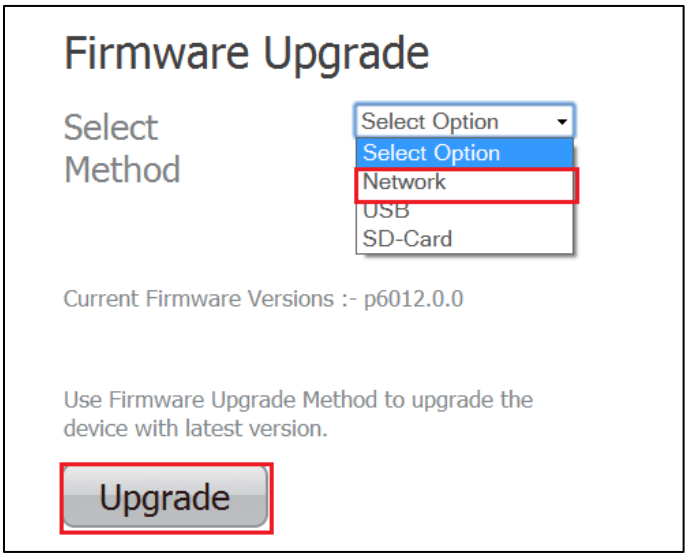

Figure 3-1: Firmware Upgrade Method Selection

Step 4. Click ***Choose File*** to select the **binary file** for upgradation and Click ***Update*** to upgrade the firmware.

- To refresh the binary file selected, Click ***Re-Select***

Figure 3-2: Firmware Update Webpage

Step 5. LS5B Shows below shown confirmation page. User has to click on **OK** button on the page.

Figure 3-2: Firmware Update Confirmation webpage

Step 6. LS5B-Module reboots to BSL, Firmware Update progress page is displayed.

Figure 3-3: Firmware Update Progress Page

On successful upload, web page displays the status of the update process

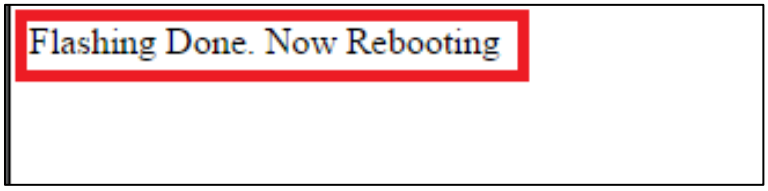

Figure 3-3: Firmware Update Status

End--

3.2.2. USB Method

To update the binary file (Application-Image or Single-Image) on the LS5B module from / USB using the web server proceed as below

Steps

Step 1. Ensure the binary filename as "**lsimage**" and place the firmware image in root directory of / USB.

> **Note:** The Firmware image should not contain any extension.

Step 2. Insert the / USB in the LS5B EVK

Step 3. Execute command **#netcfg** in the device terminal to know the device IP For Example, *10.0.1.13*

```
root@android:/ # netcfg
lo       UP                                   127.0.0.1/8    0x00000049 00:00:00:00:00:00
p2p0     DOWN                                   0.0.0.0/0    0x00001002 cc:d2:9b:fe:d6:33
eth0     DOWN                                   0.0.0.0/0    0x00001002 00:0c:43:76:20:77
wlan0    UP                                  10.0.1.13/24    0x00001043 cc:d2:9b:fe:d6:32
root@android:/ #
```

Step 4. Enter the IP in the address bar of your browser For Example, *10.0.1.13*

Step 5. In the Firmware upgrade section, Select Method as **/ USB** and Click **Upgrade**

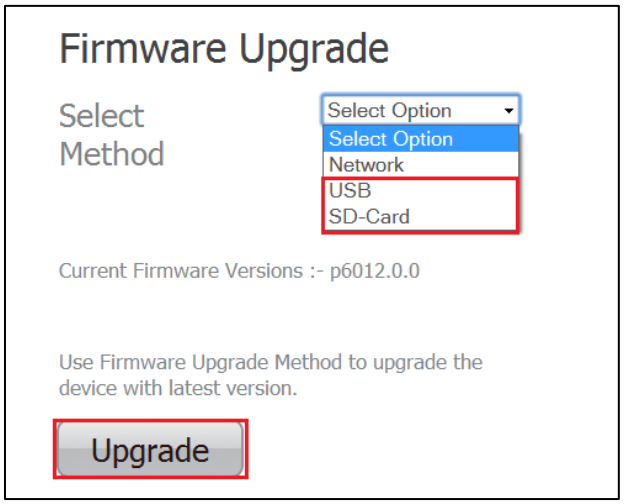

Figure 3-4: Firmware Upgrade Method Selection

Step 6. LS5B-Module reboots to BSL, and Firmware Upgrade from / USB starts automatically.

On successful upgrade, LS5B-Module reboots, with the updated application.

End - -

3.2.3. Internet Method

To update the Application Image on to the LSx module proceed as below.

> **Note:** Make sure the LS5B EVK and your laptop / PC is connected to the same AP.

Step 1. Update the NV-Item fwdownload_xml with the URL of the XML file.

See section 4.29

Step 2. Execute command **#netcfg** in the device terminal to know the device IP

```
root@android:/ # netcfg
lo       UP                                  127.0.0.1/8    0x00000049 00:00:00:00:00:00
p2p0     DOWN                                  0.0.0.0/0    0x00001002 cc:d2:9b:fe:d6:33
eth0     DOWN                                  0.0.0.0/0    0x00001002 00:0c:43:76:20:77
wlan0    UP                                  10.0.1.13/24   0x00001043 cc:d2:9b:fe:d6:32
root@android:/ #
```

Step 3. Enter the IP in the address bar of your browser

Step 4. In the Firmware upgrade section, Select Method as **Internet** and Click **Upgrade**

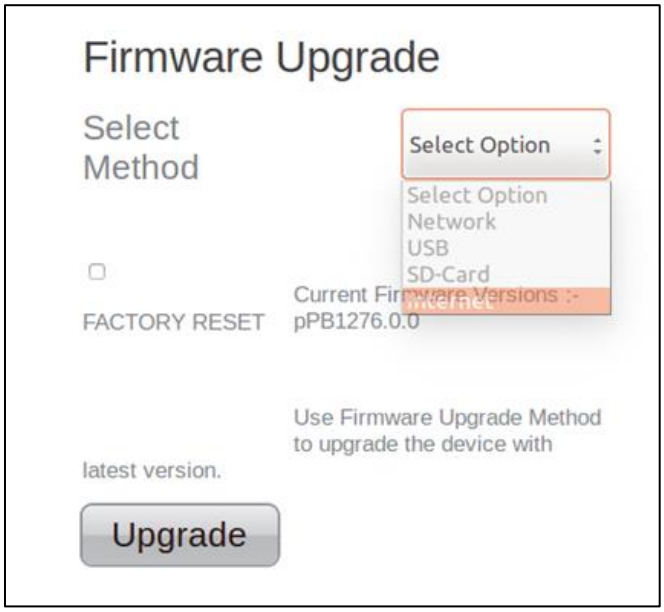

Step 5. LS5B-Module reboots to BSL

Step 6. Once the DUT begins to download the Application-Image from internet, Firmware Download progress is displayed.

Step 7. On Successful download, Firmware Upgrade progress is displayed.

Step 8. Module reboots on successful completion of upgrade process.

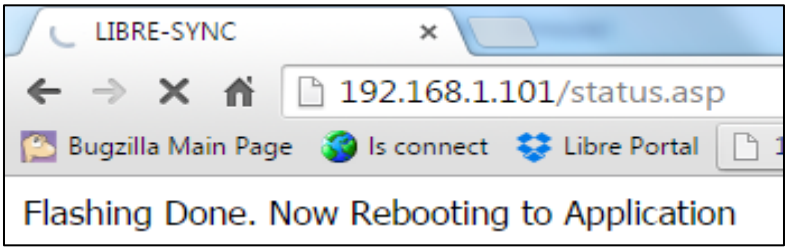

3.3. BSL Update

The BSL is a one type of boot loader that facilitates upgrade of Application Image on to the LSx module. Below section describes procedure to program the BSL on to LSx Module.

3.3.1. TFTP Method

To update the BSL for LS5B module using TFTP proceed as below

Step 1. Install TFTP server in Win 7 laptop / PC
You can download the TFTP server from web

Step 2. Store Image.bin file, in the same folder as TFTP is placed

> **Note:** Disable the firewall in windows laptop / PC. Firewall will block the file from being loaded.

Step 3. Connect the PC and module with Ethernet cable

Step 4. Set Static IP 10.10.10.3 for the Laptop/PC
go to ***Control Panel > Network Configuration > Local Area Connection > Properties > TCP/IPv4 > Properties***

Step 5. Power on the board and connect serial cable from Serial port of EVK to the USB port of PC

Step 6. Open serial port terminal (57600-8-N-1) to access system Shell

Step 7. Start TFTP server in laptop / PC

Step 8. Restart the module by issuing the command **#reboot** in terminal
or
Restart the module using the **Reset** button in EVK

Step 9. In the U-Boot options, select ***Option a*** in the terminal within 1 second

Step 10. Answer 'Y' or 'N' for the warning message prompted to proceed with the update

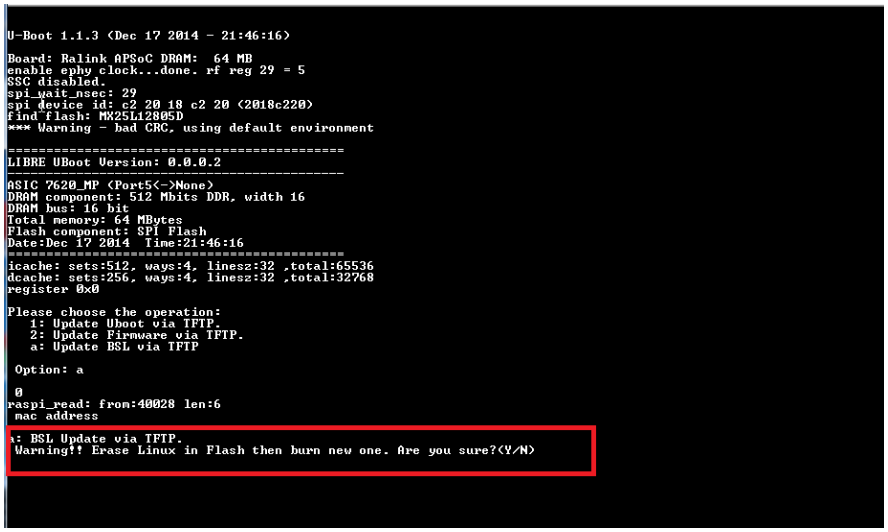

Figure 3-5: BSL Update Terminal Warning Message Prompt

Step 11. To set default Server and Device IP address, Press Enter key on Keyboard

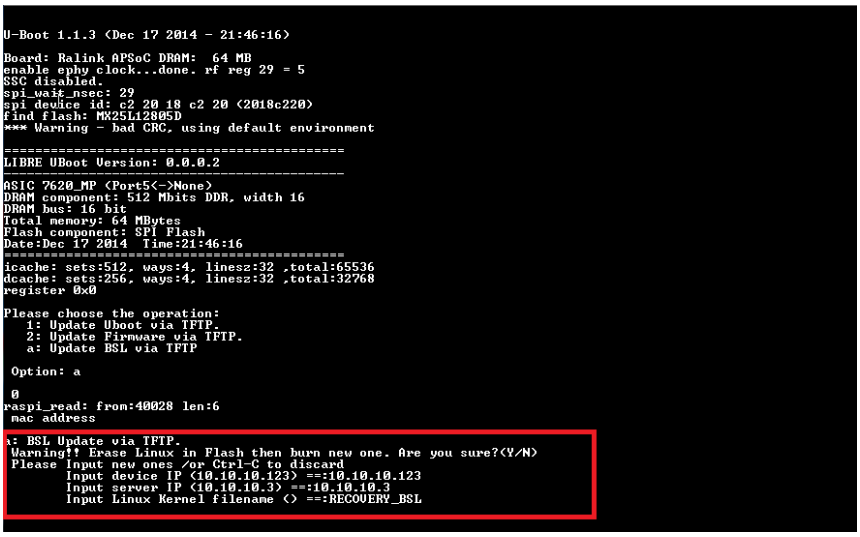

Figure 3-6: BSL Default IP Address

Step 12. Provide the name of the binary for BSL, to be flashed on the U-Boot prompt. For Example, Image.bin

> **CAUTION** Make Sure the Binary name provided, is as in the repository. Wrong binary name might make the module unusable.

End--

3.4. U-Boot Update

3.4.1. TFTP Method

To update the U-Boot for LS5B module using TFTP proceed as below

Step 1. Install TFTP server in Win 7 laptop / PC
You can download the TFTP server from web

Step 2. Store **Image.bin** file, in the same folder as TFTP is placed

> **Note:** Disable the firewall in windows laptop / PC. Firewall will block the file from being loaded.

Step 3. Connect the PC and module with Ethernet cable

Step 4. Set Static IP 10.10.10.3 for the Laptop/PC
go to ***Control Panel > Network Configuration > Local Area Connection > Properties > TCP/IPv4 > Properties***

Step 5. Power on the board and connect the EVK to the USB port of PC

Step 6. Open serial port terminal (57600-8-N-1) to access system Shell

Step 7. Start TFTP server in laptop / PC

Step 8. Restart the module by issuing the command **#reboot** in terminal
or
Restart the module using the **Reset** button in EVK

Step 9. In the U-Boot options, select ***option 1*** in the terminal within 1 second

Step 10. Answer 'Y' or 'N' for the warning message prompted to proceed with the update

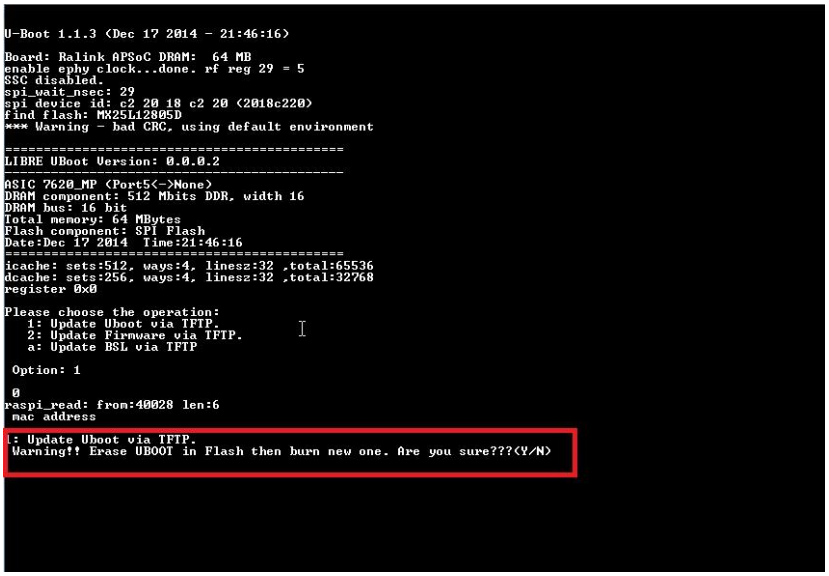

Figure 3-7: U-Boot Update Terminal Warning Message Prompt

Step 11. To set default Server and Device IP addres, Press Enter Key on Keyboard

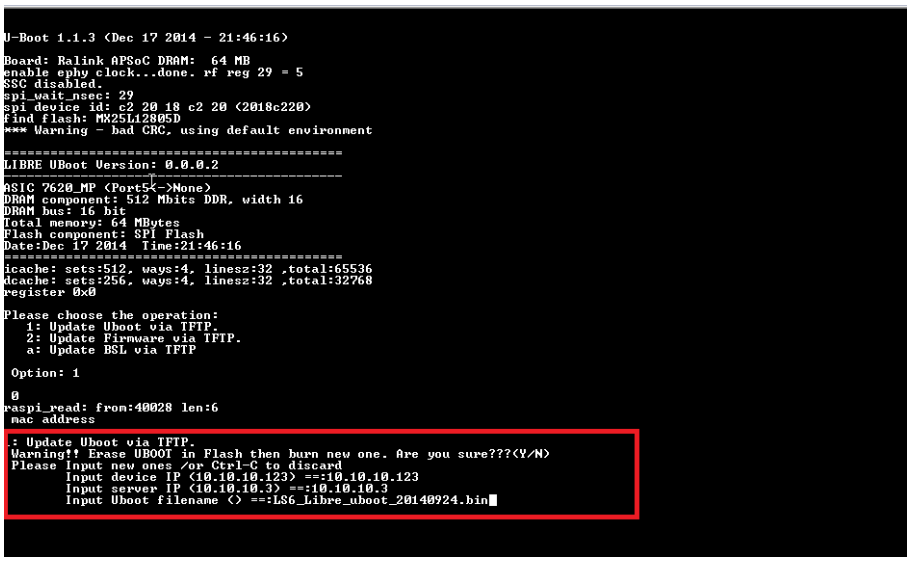

Figure 3-8: U-Boot Default IP address

Step 12. Provide the name of the binary for U-Boot, to be flashed on the U-boot prompt
For Example, Image.bin

> **CAUTION** Make Sure the Binary name provided, is as in the repository. Wrong binary name might make the module unusable.

End--

4. Configuring Non-Volatile-Item

Note:

- The latest LS-Images supports NV-Item from application only and is accessible from **Application Shell prompt**. NV-item in U-Boot is not supported anymore.
- To configure all the NV-Item values at one shot as per customer choice, customers can use the **envitem.xml** file. This xml file is used to generate a final Golden-Image for production.

Non-Volatile (NV) item in LibreSync is configured through command line.

- To configure the NV-Item, type the below command in the command line and **Reboot** the LS-Module.

Syntax of the Command to set NV-Item

#setenv <NV_item_name> <value>

Syntax of the Command to Reboot

#reboot

- To know the value of the NV-Item set, type the below command in the command line.

Syntax of the Command to Know the Value of NV-Item

#getenv <NV_item_name>

- To reset all the NV-Items to factory default values, type the below command in the command line.

Syntax of the Command to Reset All NV-Items to Factory Default

#SetFacDefault

- To know all the NV-items set, type the below command in the command line.

Syntax of the Command to Know All NV-Items set

#GetAllENV

Note: There should be space between setenv and <NV_item_name> and between the <NV_item_name> and <value>.

After configuring NV-Item, to apply the NV-Item settings, **Reboot** the LS-Module.

For example,

To Configure NV-Item hostpresent

#setenv hostpresent <<1>>

To Know the value of the NV-item, hostpresent set

#getenv hostpresent

4.1. Host Communication Over UART

Host Communication NV-item avoids Junk data/false triggers, in case of EVK's where UART1 communication is typically not required.

The Host communication NV-item should be set as 1, to enable the Host communication over UART1.

The syntax below provides the commands to enable and disable the Host Communication over UART1

Enable

#setenv hostpresent <<1>>

Disable

#setenv hostpresent <<0>>

4.2. Network Interface

Network Interface NV-item allows user to set the type of Network interface such as Ethernet, Wi-Fi or Auto.

4.2.1. Ethernet

The syntax below provides the commands to enable Ethernet.

```
#setenv netif <<eth0>>
```

4.2.2. Wi-Fi

The syntax below provides the commands to enable Wi-Fi.

```
#setenv netif <<wlan0>>
```

4.2.3. Auto

The LS-Sync software detects the network interface automatically, based on the connection available. Once the Auto detection is enabled Ethernet would get priority as network interface on Boot-Up.

The syntax below provides the commands to enable auto detection of network interface.

```
#setenv netif <<auto>>
```

4.3. SSID of DDMS-Zone in SA-Mode

The default SSID for the DDMS-Zone in SA-Mode is "**Direct-LBMyTestZone**". You can change the SSID of the DDMS-Zone by editing the NV-Item "**ddms_SSID**".

```
#setenv ddms_SSID <<NewName>>
```

Editing the NV-item changes the SA-Group SSID as "**Direct-LBNewName**".

4.4. DDMS-Zone Password

The default password for DDMS-Zone is **hello123**. The password for DDMS-Zone can be edited using the NV-item **ddms_password**.

Syntax below provides the commands to edit the password for DDMS-Zone.

```
#setenv ddms_password <<hello123>>
```

4.5. I2S LR-Clock

At present LR-Clock is supported at frequency of 44.1 KHz and 48KHz. LR-Clock by default is set to 44.1 KHz.

NV-Item **LRCK** is used to edit the frequencies of the I2S LR-Clock. The syntax below provides the commands to edit LRCK.

To set the LRCK at 44.1KHz

```
#setenv LRCK <<44100>>
```

To set the LRCK at 48KHz

```
# setenv LRCK <<48000>>
```

4.6. I2S M-Clock

M-Clock is supported at frequency of 12MHz and 12.288MHz. M-Clock by default is set to 12MHz.

NV-Item **MCLK** is used to edit the frequencies of the I2S M-Clock. The syntax below provides the commands to edit MCLK.

To set the MCLK at 12MHz

```
#setenv MCLK <<12000000>>
```

To set the MCLK at 12.288MHz

```
# setenv MCLK <<12288000>>
```

4.7. ACP

NV-Item **ACPpresent** enables detection of the Apple Co-processor for ACP certificate validation. By default the NV-Item **ACPpresent** is set as 1.

The syntax below provides command to enable or disable ACP presence detection.

Enable

```
#setenv ACPpresent <<1>>
```

Disable

```
# setenv ACPpresent <<0>>
```

4.8. Model Name

The NV-Item **Model** is used to set the model name for the Speaker or the device. The model name can be any name of the user choice. The Maximum length of the model name is 63 characters.

The default Model Name for LS-Enabled speakers is LibreSync. You can change the model name by editing the NV-Item **Model**.

```
#setenv Model <<ModelNewName>>
```

Editing the NV-item changes the Model Name as "**ModelNewName**".

4.9. Manufacturer Name

The NV-Item **Manufacturer** is used to set the Manufacturer name for the Speaker or the device. The Manufacturer name can be any name of the user choice. The Maximum length of the Manufacturer name is 63 characters.

The default Manufacturer Name for LS-Enabled speakers is Libre. You can change the Manufacturer name by editing the NV-Item **Manufacturer**.

```
#setenv Manufacturer <<ManufacturerNewName>>
```

Editing the NV-item changes the Manufacturer Name as "**ManufacturerNewName**".

4.10. Current Volume

The NV-item **current_volume** enables the user to set the volume levels for LS enabled speakers. The possible Values for the NV-Item **Current Volume** is between **0-100**. The default value is **50.**

The syntax below provides the commands to edit the NV-Item.

```
#setenv current_volume <<50>>
```

4.11. WAC SSID

The default SSID for WAC is "**LSConfigure_xxxxxx**". Where, *"xxxxxx"* stands for the MAC id of the LS-Enabled speaker or device.

You can change the SSID of the WAC by editing the NV-Item "**WAC_SSID**".

```
#setenv WAC_SSID <<NewSSIDName>>
```

Editing the NV-item changes the WAC SSID as "**NewSSIDName_xxxxxx**".

4.12. X-MODEM Packet Size

X-Modem Packet Size for transferring the firmware to Host-MCU can be either 128 bytes or 1022 bytes. The X-MODEM Packet Size can be set using the NV-Item **xmodem_pkt_size.** By default the X-MODEM Packet Size is set to be 1024 bytes.

The syntax below provides commands to edit **xmodem_pkt_size**.

To set the X-MODEM Packet Size at 128bytes

```
#setenv xmodem_pkt_size <<128>>
```

To set the X-MODEM Packet Size at 1024 bytes

```
# setenv xmodem_pkt_size <<1024>>
```

4.13. I2S Clock from Bluetooth Module

By default I2S Clock is supplied by any CODEC / DAC in I2S-Master mode. LS Module or any other chip attached to I2S-Bus (Example- Bluetooth) functions in I2S-Slave mode.

By using this NV-Item the system can be configured to operate such that, external Bluetooth module (I2S-Master) provides the I2S Clock and both CODEC / LS Module operates in I2S-Slave mode.

To set CODEC / DAC as I2S-Master (Default State)

```
#setenv BCLK <<0>>
```

To set External Bluetooth as I2S-Master

```
#setenv BCLK <<1>>
```

4.14. ACP Sharing

ACP Sharing NV-Item is used to enable or disable ACP Sharing between LS-Module and Host-MCU.

When ACP Sharing is disabled, there will be no reply on Message-Box #15 for the request by Host-MCU on Message-Box #14.

Use the below syntax commands to enable ACP Sharing.

To enable ACP Sharing

#setenv AcpToLS <<1>>

To disable ACP Sharing (Default)

#setenv AcpToLS <<0>>

4.15. HOST BAUDRATE

HOST_BAUDRATE NV-Item is used to define different UART BAUDRATE. UART BAUDRATE supported in LS5B is 9600, 19200, 38400, 57600 (default) and 115200

Use the below syntax to set the UART NAUDRATE.

To Set UART BAUDRATE

#setenv HOST_BAUDRATE 57600

4.16. DLNA Connection Close

DLNA_ConnClosed NV-Item is used to enable / disable the time gap between play-pause trigger.

- Setting DLNA_ConnClosed to '0' will trigger Play-Pause instantaneously.
- Setting DLNA_ConnClosed to '1' will provide a time gap (negligible) between Play-Pause trigger.

Note: Setting DLNA_Conn_Closed NV-Item to '0' will **FAIL** the DLNA

Certification.

Use the syntax below to enable / disable the time gap between play-pause trigger in DLNA.

To Enable Time Gap Between Play-Pause Trigger (Default)

#setenv DLNA_ConnClosed <<1>>

To Disable Time Gap Between Play-Pause Trigger

#setenv DLNA_ConnClosed <<0>>

4.17. Country

NV-Item Country is used to specify the Country Code of speaker device. Country code is used to state the Speaker device region.

Speaker device region is required to abide by the channel regulations of the region in which the device is present.

Countries Supported and Channel Limitations

Country	Country Code	Channels
United States (Default)	US	1-11
Europe	EU	1-13
Japan	JP	1-14

Use the syntax below to specify the country Code of the Speaker Device.

To Specify the Country Code

#setenv Country <<US>>

4.18. Serial Number

NV-Item Serial_num indicates the serial number of the speaker device. Serial number can be of maximum length of 15 charatcers.

Use the syntax below to define the serial number of the speaker device.

To Define The Serial Number of The Speaker Device

```
#setenv Serial_num <<1234>>
```

4.19. Model Number

NV-Item Model_num indicates the Model of the speaker device. Model Number can be of maximum length of 15 charatcers.

Use the syntax below to define the model number of the speaker device.

To Define The Model Number of The Speaker Device

```
#setenv Model_num <<4567>>
```

4.20. Hardware Version

NV-Item Hardware_version indicates the hardware used in the speaker device. Hardware version can be of maximum length of 15 charatcers.

Use the syntax below to define the Hardware Version of the speaker device.

To Define The Serial Number of The Speaker Device

```
#setenv Hardware_version <<bncm>>
```

4.21. Firmware Version

NV-Item Firmware_version indicates the firmware used in the speaker device. Firmware version can be of maximum length of 15 charatcers.

Use the syntax below to define the Firmware version of the speaker device.

To Define The Firmware Version of The Speaker Device

```
#setenv Firmware_version <<tyio>>
```

4.22. Firmware Update Link

NV-Item fwupdate_link is used to provide the URL for the firmware update over internet.

Use the syntax below to provide the URL for firmware update.

To Provide the URL for Firmware Update over Internet

```
#setenv fwupdate_link << www.librewireless.com >>
```

4.23. Firmware Download XML

NV-Item fwdownload_xml is used to provide the URL for the XML file that contains the information about Firmware version, HOST-MCU version and the link to download the firmware.

Use the syntax below to provide the URL for firmware update.

To Provide the URL for Firmware Update over Internet

```
#setenv fwdownload_xml <<
http://172.16.2.103/share/firmware/LS5B/firmware_download.xml</value
>>
```

For information on Firmware Download XML file and its structure refer to ***LibreWirelessTechNote_Failsafe-Firmware_Upgrade*** document available in Libre Portal.

4.24. Album Art Size

NV-Item **AlbumArtMaxSizeKB** defines the size of the album art. The maximum album art size supported in LibreSync is 2048 KB.

Use the syntax below to provide the URL for firmware update.

To Provide the URL for Firmware Update over Internet

#setenv AlbumArtMaxSizeKB << 2048 >>

4.25. Spotify APP Key

NV-Item SpotifyAppKey is used to store the unique application key to access the Spotify Library. LS-enabled speaker device has the Libre's application key as the default value. Replace the Application key with your own application key provided by Spotify.

The maximum size of the application key is 1024 characters.

Use the syntax below to store the Spotify Application Key.

To Store The Spotify Application Key

#setenv SpotifyAppKey <<
0147A183DEFC792085C3D545471BEF4127D2F23F12619CFDA11DAB7E1E6A86C8.... >>

5. Key Button Functionality

5.1. Setup Button (WAC / SAC / DDMS)

The SW5 button in LS5B-EVK is configured to trigger WAC / SAC and DDMS after the LS module boots up as below.

- **Single press**, the setup button on the LS EVK, to configure the speaker as DDMS Zone-Master in Stand-Alone mode.
    - This state would be stored in non-volatile memory so that even after boot-up, the state is retained.
- **Double press** the setup button on the LS EVK, to put back the speaker to DDMS Zone-Station in Stand-Alone mode.
    - This state would be stored in non-volatile memory so that even after boot-up, the state is retained.
    - This state would be maintained until user changes to WAC mode or to Zone-Master mode on this specific speaker.
- **Press and Hold** the setup button on the LS EVK **for 3 seconds**, to come out of the DDMS mode.
    - LS EVK connects to the AP or the SSID configured earlier.
    - To connect the LS EVK to different AP or SSID, **Press and Hold** the setup button on the LS EVK **for 3 seconds** again, to trigger WAC.
    - If the LS EVK was not configured to any AP, Press and Hold of setup button triggers WAC.
    - This state is stored in non-volatile memory and even after boot-up, the state is retained.

For more information on DDMS Stand-Alone mode and Home-Network mode refer to **DDMS Usability guide** (Android / iOS) available in LibreSync Document Portal.

5.2. WPS / Factory Reset Key Button

(TBG)

6. Network Configuration

The network configuration method supported in LS-Module is

- Wireless Network Setup Using WAC Method
- Wireless Network Setup Using SAC Method
- Wireless Network Setup Using Webserver Method
- Wireless Network Setup Using WPS Push Button Method

6.1. Wireless Network Setup Using WAC and SAC

6.1.1. Wireless Network Setup Using WAC

To setup a wireless network using Wireless Area Controller (WAC) proceed as below

Step 1. Press and hold the **Setup** button for 3 seconds on the EVK

Step 2. On an iOS device running iOS7, go to ***Settings > Wi-Fi > SET UP NEW DEVICE***
The WAC speaker is listed. For example, LibreSync <MacID>

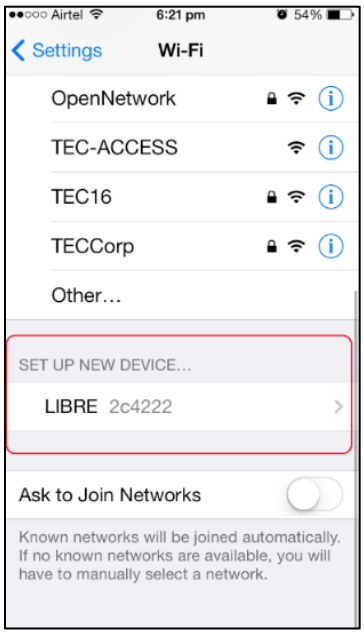

Figure 6-1: WAC Speaker Listed

Step 3. Select the speaker / EVK and tap NEXT

iOS device shares its Wi-Fi settings; that is SSID and Password with the WAC speaker and configures the device.

On successful configuration the device is configured to the Wi-Fi network to which the iOS device is connected.

End--

6.1.2. Wireless Network Setup Using SAC (Speaker Android Configuration) Method

To setup a wireless network using Libre Android APP proceed as below

Step 1. Power on the Speaker (DUT) and press and hold the **Setup button** on LS5B EVK for 3 seconds.

Speaker enters SAC mode

Step 2. Open the ***Libre App***

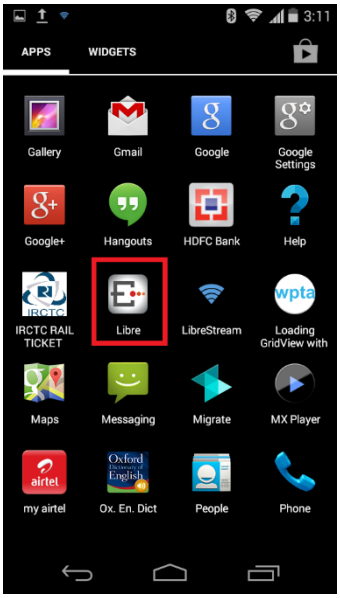

Figure 6-5: Libre App

Step 3. Tap ***SAC*** option in the top menu

Figure 6-6: Libre APP, Main view

Step 4. APP searches for the available devices in the network, Select the device from the **SAC device list** and Tap ***OK***

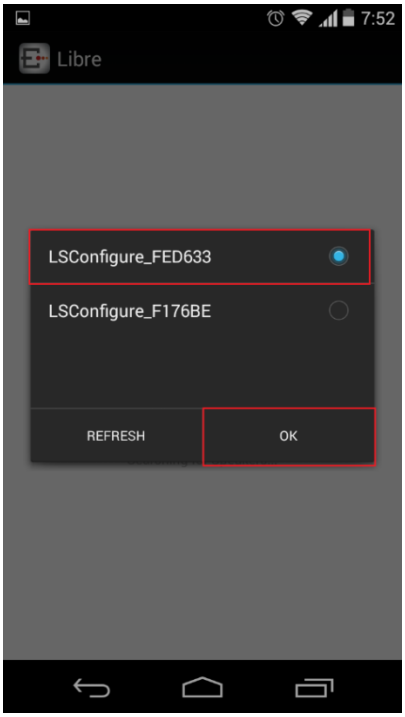

Figure 6-7: SAC Device List

Step 5. Libre APP lists the all the available SSIDs (Network)

Step 6. Select the required **SSID** (Network) and Tap **OK**

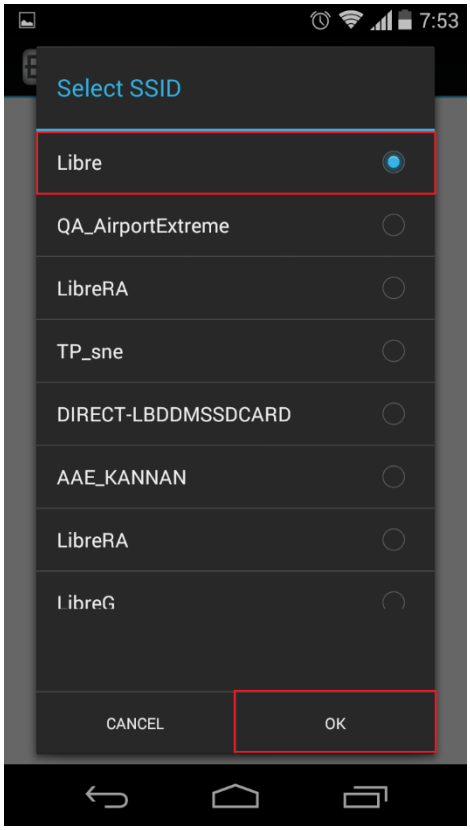

Figure 6-8: SSID List

Step 7. Libre APP Connects to the SSID and pops a ***Custom Dialog*** Box.
The Custom Dialog Box displays the Speaker name and Space for the password to the phone network.

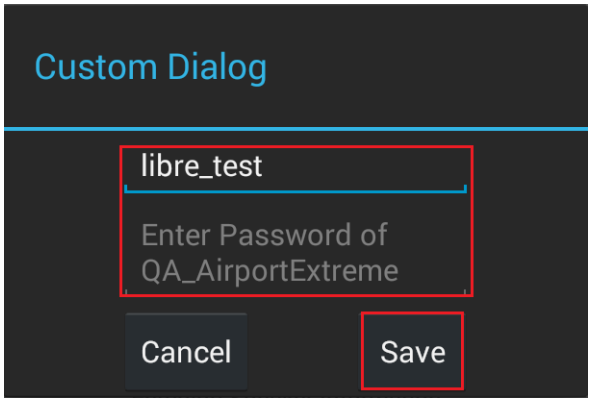

Figure 6-9: Libre APP Custom Dialog

Step 8. You can edit the Speaker Name and Enter the Password of the SSID to which the phone is connected and Tap ***Save***.

Step 9. App configures the speaker to the Wi-Fi network. The Android Smart Phone also connects to the network selected.

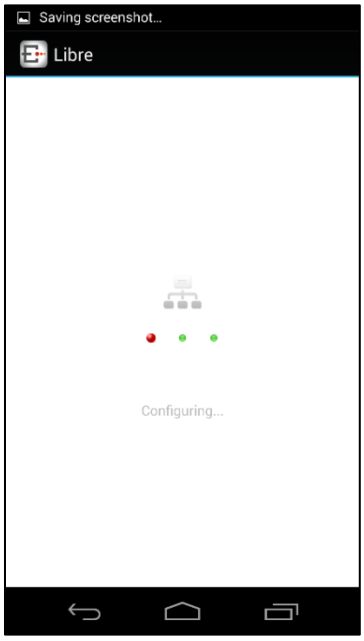

Figure 6-10: Configuring the Speaker

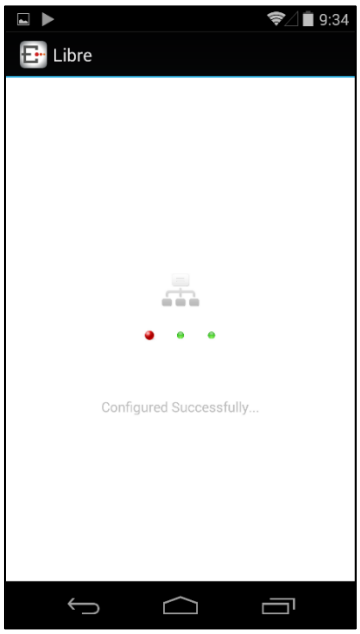

Figure 6-11: Successful Configuration

End--

6.1.3. WAC / SAC Trigger Behaviour in DDMS Mode and Non-DDMS Mode

This sections explains different behaviours of the speaker for network configuration when WAC / SAC is triggered.

For details on the network configuration using WAC / SAC refer Section 6.1 and Section 6.2.

Scenario 1

Precondition	LS-Enabled speaker is in **Non-DDMS Mode** and is **not connected to AP**.
Action	WAC / SAC is triggered using the Setup Button (Press and Hold for three seconds) in LS EVK or through Message-Box 142.
Result	LS-Enabled Speaker enters WAC / SAC mode for Network Configuration.

Scenario 2

Precondition	LS-Enabled speaker is in **Non-DDMS Mode** and is **connected to AP**.
Action	WAC / SAC is triggered using the Setup Button (Press and Hold for three seconds) in LS EVK or through Message-Box 142.
Result	LS-Enabled Speaker enters WAC / SAC mode for Network Configuration.

Scenario 3

Precondition	LS-Enabled speaker is in **Non-DDMS Mode** and is **not connected to AP**.
Action	1. Reboot the Speaker. Currently the speaker is in Non-DDMS Mode. 2. Configure the speakers to **DDMS-Mode** i.e. either in SA Mode/HN Mode (refer to DDMS usability guide).

	3. Trigger WAC / SAC using the Setup Button (Press and Hold for three seconds) in LS EVK or through Message-Box 142.
Result	LS-Enabled Speaker switches from DDMS Mode to Non-DDMS Mode and enters WAC / SAC mode for Network Configuration.

Scenario 4

Precondition	LS-Enabled speaker is in **Non-DDMS Mode** and is **connected to AP**.
Action	1. Reboot the Speaker. Currently the speaker is in Non-DDMS Mode. 2. Configure the speakers to **DDMS-Mode** i.e. either in SA Mode/HN Mode (refer to DDMS usability guide). 3. Trigger WAC / SAC using the Setup Button (Press and Hold for three seconds) in LS EVK or through Message-Box 142.
Result	LS-Enabled Speaker switches from DDMS Mode to Non-DDMS Mode and connects to the AP configured earlier.

Scenario 5

Precondition	LS-Enabled speaker is in **DDMS Mode** and was **not connected to AP** earlier.
Action	1. Reboot the Speaker and 2. Trigger WAC / SAC using the Setup Button (Press and Hold for three seconds) in LS EVK or through Message-Box 142.
Result	LS-Enabled Speaker switches from DDMS Mode to Non-DDMS Mode and enters WAC / SAC mode for Network Configuration.

Scenario 6

Precondition	LS-Enabled speaker is in **DDMS Mode** and was **connected to AP** earlier.

Action	1. Reboot the Speaker and 2. Trigger WAC / SAC using the Setup Button (Press and Hold for three seconds) in LS EVK or through Message-Box 142.
Result	LS-Enabled Speaker switches from DDMS Mode to Non-DDMS Mode and connects to the AP configured earlier.

6.2. Wireless Network Setup Using Webserver

6.2.1. Webpage Method

This method is used if the device is already connected to a network.

To setup wireless network via Webpage proceed as below

Step 1. Execute command **#netcfg** in the device terminal to know the device IP For Example, *10.0.1.13*

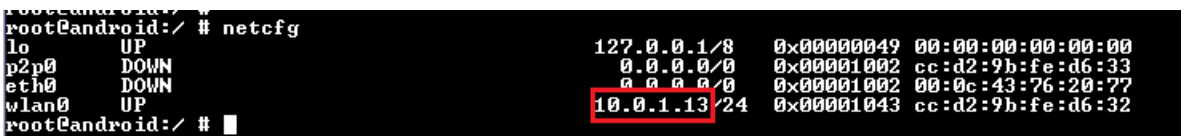

Step 2. Enter the IP in the address bar of your browser, For Example, *10.0.1.13*. The webpage shows the Network status of the currently connected Access Point.

Figure 6-12: Network Status

Step 3. In ***Select Your Network*** section, Select the Access Point (AP) to be connected, from Select your Network drop-down list and Click ***Save***

Device reboots and connects to the new network and acquires new IP

Figure 6-13: Network Configuration

End --

You can also connect the device to the network of your choice by setting the Static IP for the device.

Step 1. Select the Access Point from ***Select Your Network*** drop-down list.

Step 2. Enable ***Static IP*** settings, Enter the Static IP address and Click ***Save***

> **Note:** Use the Access Point IP as the Static IP for the Device.

Device reboots and connects to the network and acquires the static IP as defined.

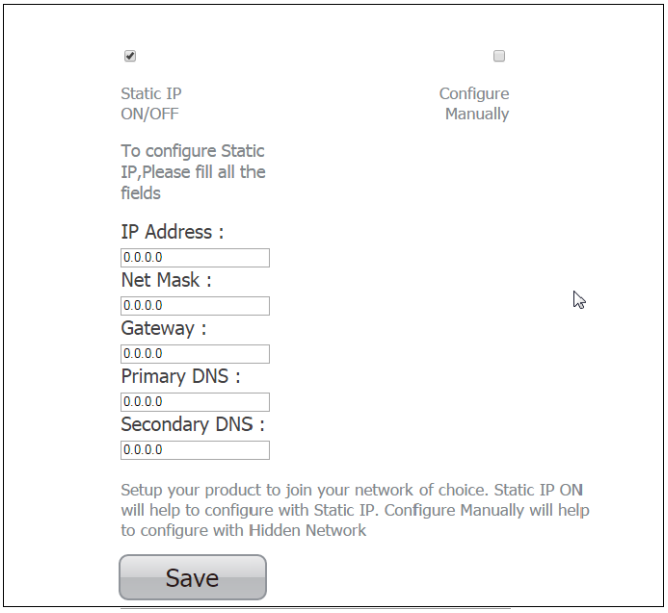

Figure 6-14: Network Configuration using Static IP

Step 3. To know the IP address of the device execute command ***#netcfg*** in the device terminal

End--

6.2.2. LS-Connect Method

To setup wireless network using LS-Connect proceed as below

Step 1. Enter Command ***#startwac &*** in device terminal to trigger LS-Connect
Or
Press and hold the **Setup** button for 3 seconds on the EVK

Device enters "AP" mode and is available in the Wi-Fi network list as **LS-Configure_xxxxxx**

Step 2. From the **network list** Select **LSConfigure_xxxxxx** and connect the laptop to the network.

Step 3. Enter the following URL in the address bar of your browser *192.168.43.1* webpage shows Network status as shown in Figure 6-4.

Figure 6-15: Network Status in Webpage

Step 4. Select the Access Point (AP) to be connected to from Select Your Network drop-down list

Step 5. Select Security Type from ***Security*** drop-down list, Enter the valid login credentials and Click ***OK***

Device disconnects from laptop and connects to the network selected

Step 6. To know the newly acquired IP execute command ***#netcfg*** in the device terminal

End--

6.2.3. Manual Configuration Method

To connect the device to the network manually proceed as below.

Optional: Device can be connected to the network using the hidden SSID.

Step 1. In Select Your Network section, enable Configure Manually

Step 2. Enter the Access Point ***SSID*** and Click ***Save***.
Device reboots and connects to the network.

Step 3. To know the newly acquired IP execute command **#netcfg** in the device terminal

Figure 6-16: Configure Network Manually

End--

6.3. Wireless Network Setup Using WPS Push-Button Method

6.3.1. WPS Trigger from Command Line

To setup a wireless network using WPS proceed as below

Step 1. On system boot, enter the command **#wpa_cli wps_pbc** in device terminal

Step 2. Trigger (Press Once) Setup button in the Access Point.

Device connects to the Network of the Access Point.

Step 3. To know the newly acquired IP execute command **#netcfg** in the device terminal

End--

6.3.2. WPS Trigger from LUCI

You can setup a wireless network for the LS-Enabled speaker, using the LUCI Message-Box #141. Message-Box #141 is used by Host to trigger WPS mode.

For more information see section 6 in LUCI Technical Note,

LibreWirelessTechNote - LS_Light_Weight_Universal_Control_Interface.

6.3.3. WPS Trigger from Key Button

(TBG)

6.4. I-Device Wi-Fi Settings Sharing

Host-MCU requests the LS enabled device to share the Wi-Fi settings over Message-Box # 126. On request from HOST-MCU, iOS device shows a pop-up message to the user to "Ignore" or "Allow" the settings sharing.

Figure 6-17: Wi-Fi settings sharing

- To share Wi-Fi setting tap ***Allow***
- To cancel sharing Wi-Fi settings tap ***Ignore***

7. Features

7.1. Libre APP for Android

LUCI enables user to remotely, control the LibreSync LS5B enabled product using the Libre Application for android. The application can be used to browse DLNA-DMS in the network, SD Card connected to device and other online radio stations such as vTuner and TuneIn , and stream music using the DMP feature supported by LS5B.

For more information on using Libre APP refer

LibreWireless-Usability_Guide_Dynamic_Direct_Multi-Node_Streaming

7.2. DDMS

A Wireless Dynamic Direct Multi-Node Streaming (DDMS) Zone is a group of nodes, (DDMS enabled speakers) chosen dynamically by an end user to synchronously play audio from a given content source.

This group of speakers can play music from any Audio Source synchronously without any delay between the nodes. Each group can consists of two or more nodes.

For information on setting up devices for DDMS, and Using Libre App refer to

LibreWireless-Usability_Guide_Dynamic_Direct_Multi-Node_Streaming

The device webpage provides interface to update DDMS SSID and password.

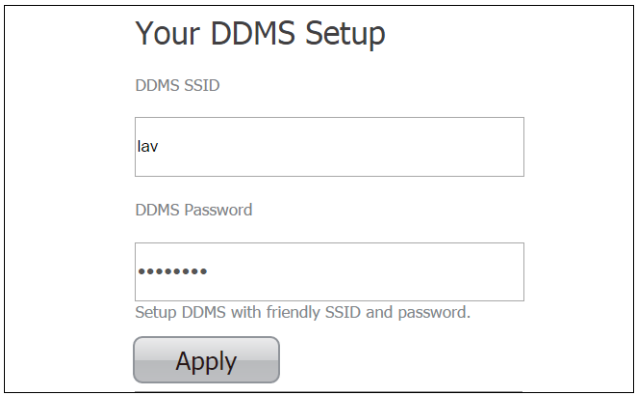

Figure 7-1: DDMS Setup in webpage

7.3. Software Security

LibreSync software is secured using Crypto IC. Crypto IC is embedded either in the LS5B module or the ACP. Crypto IC authenticates and allows only the valid LS5B software to boot on the LS5B modules.

7.4. Source Switching

LibreSync enables user to switch the playback sources without any hitches. User can choose to stream music either from AirPlay or UPnP server and the music streams on the selected device from the source.

For example, A LS Device streaming AirPlay, starts streaming music from DLNA / DMR when, the user selects music from Win 7 -Media Player to be played on the device.

7.5. Autosense of Audio CODEC

The new LS Firmware will automatically detect the presence of Audio CODEC in the firmware.

If LS-SoC detects Wolfson CODEC (WN8904) on LS-I2C bus, then LS-Module takes care of controlling the Audio CODEC and is applicable to LS5B EVK.

If Wolfson CODEC is not detected, LS-SoC does not control the Audio CODEC. Host MCU must take care of handling AUDIO DAC / CODEC.

7.6. AUX-In Support

Users can connect Audio Source to AUX-In jack of EVK and select the source from Libre-APP.

7.7. Airplay®

After the speaker or device is configured to the network, it is discovered by the iOS device and iTunes, and is available for AirPlay streaming.

To stream AirPlay proceed as below

Step 1. Open the Control Centre or Music App on iOS device
Or
Open iTunes installed on any machine

Step 2. Tap the AirPlay icon
AirPlay enabled LibreSync device is listed

Step 3. Select the device and select Play
AirPlay starts streaming

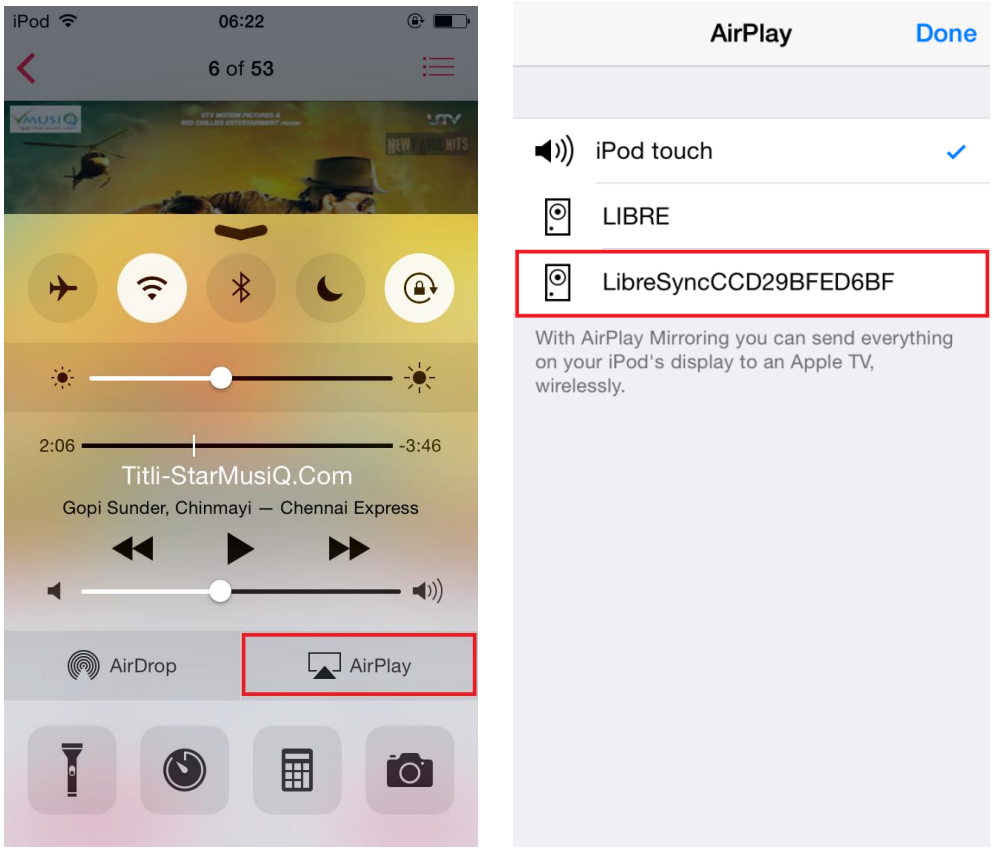

Figure 7-2: AirPlay Stream

End--

7.7.1. Password for Airplay Playback

You can either enable or disable a password, to start Airplay playback on the LS enabled device through a webpage.

Enable

To enable a password for Airplay Playback proceed as below.

Step 1. Execute command **#netcfg** in the device terminal to know the device IP
For Example, *10.0.1.13*

```
root@android:/ # netcfg
lo       UP                   127.0.0.1/8    0x00000049 00:00:00:00:00:00
p2p0     DOWN                   0.0.0.0/0    0x00001002 cc:d2:9b:fe:d6:33
eth0     DOWN                   0.0.0.0/0    0x00001002 00:0c:43:76:20:77
wlan0    UP                  10.0.1.13/24    0x00001043 cc:d2:9b:fe:d6:32
root@android:/ #
```

Step 2. Enter the IP in the address bar of your browser with port number
For Example, *10.0.1.13*

Step 1. In ***Your Device Name*** section, Enter the ***Airplay Password*** in the white box below and Click ***Apply***
Device reboots automatically.

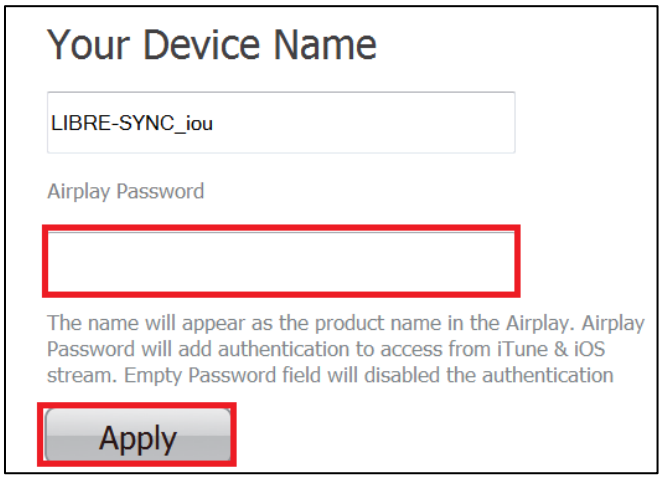

Figure 7-3: Password for Airplay

Step 2. Open the Control Centre or Music App on iOS device
Or
Use iTunes installed on any machine

Step 3. Tap the AirPlay icon
AirPlay enabled LibreSync device is listed

Step 4. Select the device and Select Play

Step 5. In the pop screen enter the password entered in the webpage
AirPlay starts streaming.

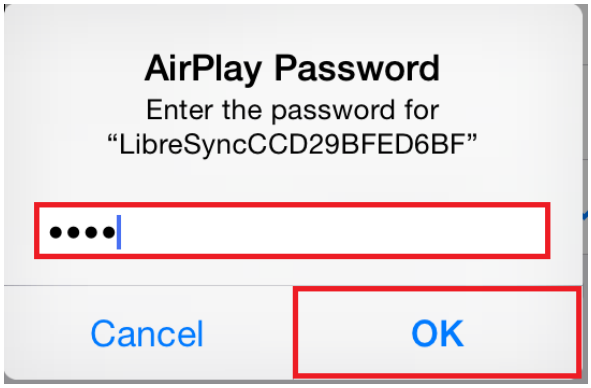

Figure 7-4: Enter Password for Streaming

End--

Disable

To disable a password for Airplay Playback proceed as below.

Step 1. Execute command **#netcfg** in the device terminal to know the device IP
For Example, *10.0.1.13*

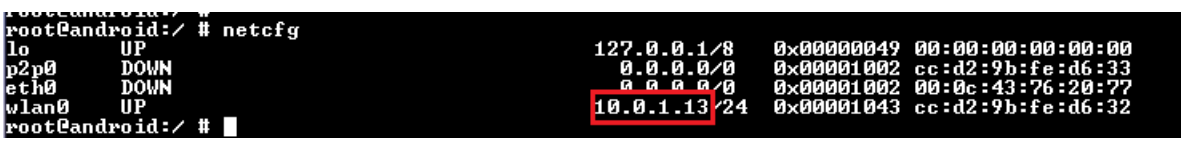

Step 2. Enter the IP in the address bar of your browser with port number
For Example, *10.0.1.13*

Step 3. In ***Your Device Name*** section, Clear the previous Password and leave the white space blank and Click ***Apply***

Step 4. A pop-up message appears Click ***OK*** Click ***Apply***

Figure 7-5: Disable Airplay Password

Device reboots automatically.

End --

7.8. DLNA ® / DMR

After the device is configured to the network, device is discoverable over UPnP®. Any Universal Plug and Play (UPnP) / Digital Living Network Alliance (DLNA) certified controller can be used to stream music to the device.

To test ***Play To*** functionality proceed as below

Step 1. Open Media Player on Windows 7

Step 2. In the play list, Click ***Play To*** and select the LS enabled speaker or device
Or
Right click on the song and Click ***Play To***

Music starts streaming.

If the speaker / device is not visible on the Windows 7 Media Player, go to ***Stream > More streaming options***, ensure speaker is in Allowed state.

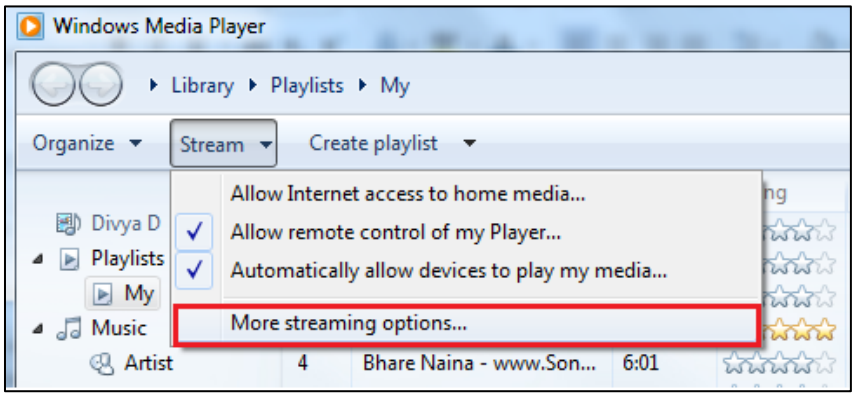

Figure 7-6: Media Player Stream Menu

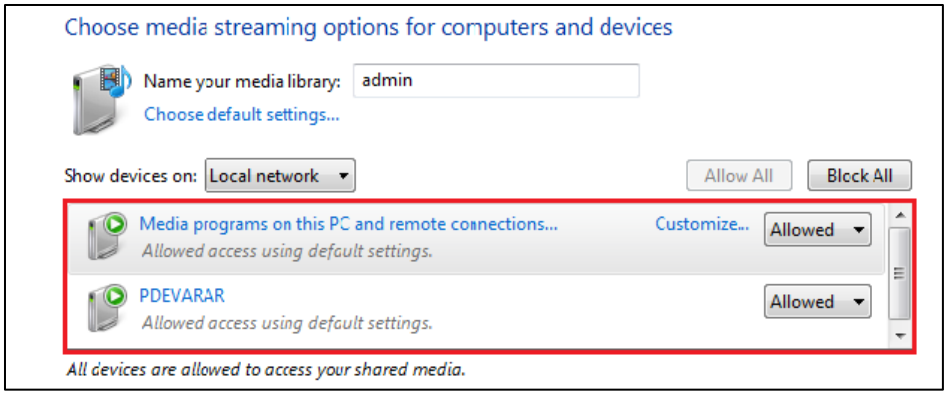

Figure 7-7: Media Streaming Options

> **Note:** Digital Media Renderer (DMR) functionality can be verified using any app on the Android / iOS devices as well. For example, the native audio player on Samsung Galaxy devices can be used.

End--

7.9. i-Device playback over USB

LS supports audio playback from i-Devices over USB. User can select the content source from an iOS device to stream music on LS-Enabled speaker.

Apple devices which support iAP2 protocol (Apple devices with lightning connector except iPod nano 7g) can be connected to LS device and playback can be done.

When Host-MCU is Not-Present (in LS-EVK)

If the NV-Item **hostpresent** is set to '0' , connect the apple device and press PLAY icon on the UI of the apple device to start the playback.

> **To Disable NV-Item hostpresent**
>
> #setenv hostpresent 0

When Host-MCU is Present (in Customer Product)

If the NV-Item **hostpresent** is set to '1' ,

To Enable NV-Item hostpresent

#setenv hostpresent 1

To start playback from Apple Device following sequence is to be followed.

Step 1. LS sends the new source to the Host MCU over Message-Box# 10

Step 2. Host MCU may send a command to LS (Command Type: GET) over Message-Box#50 (Current Source – with value 16 that is Apple Device) to get to know the current playback source, if any.

Step 3. Host MCU takes a decision whether it has to allow/disallow the new Audio Source.

Step 4. Send a confirmation on Message-Box#11 with data field set to 1/0 for Allowed/Not-allowed respectively.

Apple Device Connection Status

- When Apple device is connected Message-Box # 38 is updated with the value '2'
- When it is disconnected Message-Box # 39 is updated with the value '2'.

For more information refer to LUCI document

LibreWirelessTechNote - LS_Light_Weight_Universal_Control_Interface

7.10. USB Playback

LS supports audio playback from USB. User can select the content source from an USB drive to stream music on LS-Enabled speaker.

7.11. TCP / IP Tunneling

TCP/IP Tunnelling is a unique feature supported by LS modules. Tunneling enables a Host MCU to communicate with other network devices over UART. The Host MCU can build their own proprietary protocol using LUCI tunneling.

For more information on TCP / IP tunneling refer LUCI document

LibreWirelessTechNote - LS_Light_Weight_Universal_Control_Interface

7.12. Device Name Configuration

You can define a friendly name to LS-Platform enabled device. To define the friendly name proceed as below.

Step 1. Execute command **#netcfg** in the device terminal to know the device IP
For Example, *10.0.1.13*

```
root@android:/ # netcfg
lo       UP                                   127.0.0.1/8    0x00000049 00:00:00:00:00:00
p2p0     DOWN                                   0.0.0.0/0    0x00001002 cc:d2:9b:fe:d6:33
eth0     DOWN                                   0.0.0.0/0    0x00001002 00:0c:43:76:20:77
wlan0    UP                                  10.0.1.13/24    0x00001043 cc:d2:9b:fe:d6:32
root@android:/ #
```

Step 2. Enter the IP in the address bar of your browser with port number
For Example, *10.0.1.13*

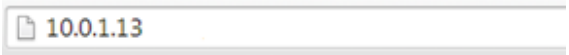

Step 1. In ***Your* Device Name** section, Enter the Device Name in the white box and Click ***Apply***
Device reboots automatically.

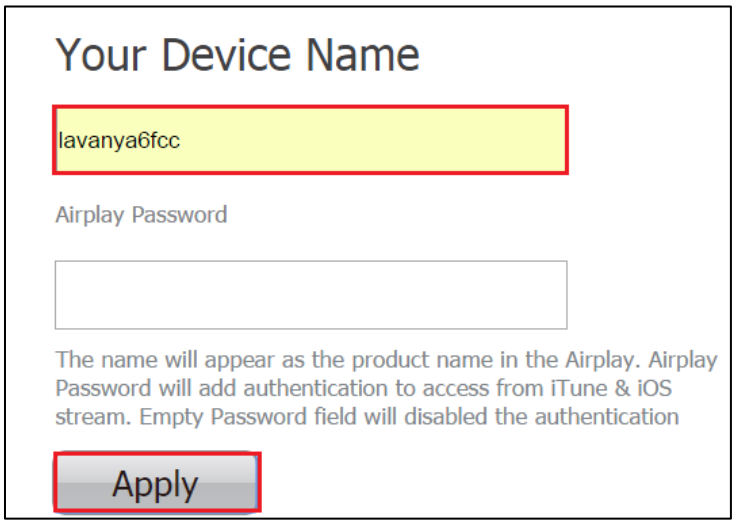

Figure 7-9: Device Name Section

Note:

- The device name length can be up-to maximum of 50 characters.
- After the Firmware upgrade, if the device friendly name is not set, the device name is listed as below

- iTunes server and DMR Speakers lists the device as LibreSync_xxxxxx

End--

7.13. Wi-Fi Scan Result

Wi-Fi Scan result enables you to list the available access point. This feature is intended to be used by the APP developers to list the available networks in the APP for configuration.

To use the feature, in the address bar of your browser enter the IP address followed by */scanresult.asp.*

192.168.0.111/scanresult.asp

7.14. Switch between Wired and wireless modes

You can switch between wired and wireless mode using the Webserver

7.14.1. Switching to Wired Mode

To switch to wired mode from Wi-Fi mode proceed as below

Note: Make Sure device is connected to an Wi-Fi Network

Step 1. Execute command **#netcfg** in the device terminal to know the device IP
For Example, *10.0.1.13*

```
root@android:/ # netcfg
lo       UP                                  127.0.0.1/8    0x00000049 00:00:00:00:00:00
p2p0     DOWN                                  0.0.0.0/0    0x00001002 cc:d2:9b:fe:d6:33
eth0     DOWN                                  0.0.0.0/0    0x00001002 00:0c:43:76:20:77
wlan0    UP                                 10.0.1.13/24    0x00001043 cc:d2:9b:fe:d6:32
root@android:/ #
```

Step 2. Enter the IP in the address bar of your browser with port number
For Example, *10.0.1.13*

10.0.1.13

Step 3. In Select Your Network drop-down list, select ***Switch to Wired mode***

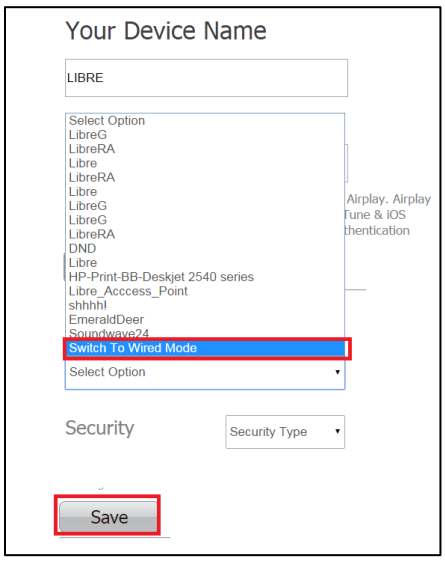

Figure 7-10: Switch to Wired Mode

Step 4. Connect the device with an Ethernet cable

Step 5. Click Save

LS module reboots automatically

End--

7.14.2. Switching to Wireless Mode

To switch to wired mode from Wi-Fi mode proceed as below

Step 1. Execute command **#netcfg** in the device terminal to know the device IP
For Example, *192.168.0.103*

```
127|root@android:/ #
127|root@android:/ # netcfg
lo       UP                    127.0.0.1/8     0x00000049 00:00:00:00:00:00
eth0     UP                192.168.0.103/24    0x00001043 00:0c:43:76:20:77
wlan0    DOWN                  0.0.0.0/0       0x00001002 00:00:00:00:00:00
root@android:/ #
```

Step 2. Enter the IP in the address bar of your browser with port number
For Example, *192.168.0.103*

Step 3. In Select Your Network drop-down list, select ***Switch to Wi-Fi mode*** and Click ***Save***

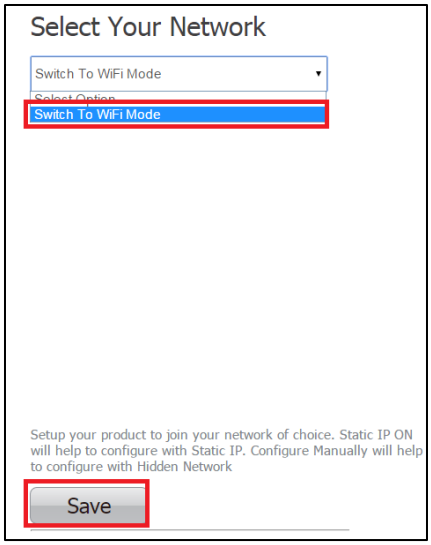

Figure 7-11: Switch to Wi-Fi Mode

LS module reboots automatically.

End--

7.15. Music Services

7.15.1. vTuner

vTuner is an internet radio device that receives and plays streamed media, either from Internet radio or Home network.

vTuner on Libre platform can be used to stream music using the Libre APP's Remote Play option. For information on using the Libre APP for vTuner see section 3.3.2 in DDMS Usability Guide, ***LibreWireless-Usability_Guide_Dynamic_Direct_Multi-Node_Streaming.***

7.15.2. TuneIn

TuneIn is an internet radio station that enables streaming of music.

TuneIn on Libre platform can be used to stream music using the Libre APP's Remote Play option. For information on using the Libre APP for TuneIn, see section 3.3.2 in DDMS Usability Guide, ***LibreWireless-Usability_Guide_Dynamic_Direct_Multi-Node_Streaming.***

7.15.3. QQ Music

LibreSync enable you to stream music via QQ music service.

To use the QQ music service

Step 1. Register for QQ Music account and get the Username and Password for the account

Step 2. Download the QQ Music app from the Play Store.

To stream music from QQ Music proceed as below.

Step 1. Reboot the LS enabled device and connect to the network.

Step 2. Connect Smartphone to the same network.

Step 3. Open the QQ Music APP

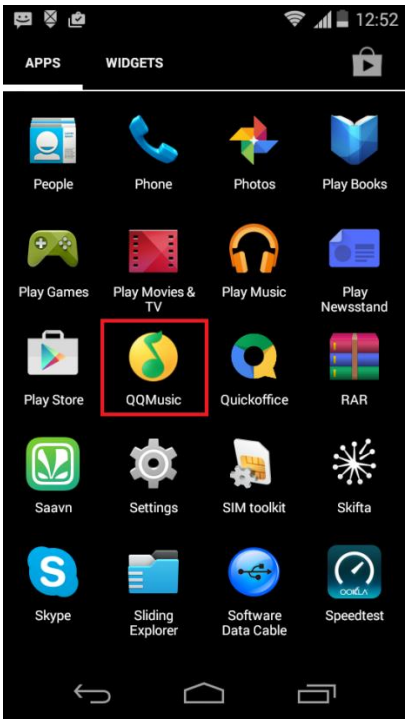

Figure 7-12: QQ Music APP

Step 4. Login to QQ Music, using the Username and Password received, during registration.

Figure 7-13: Login Screen

Step 5. Browse for songs in the QQ Music Server

Step 6. In Now playing screen, select 'Q' symbol

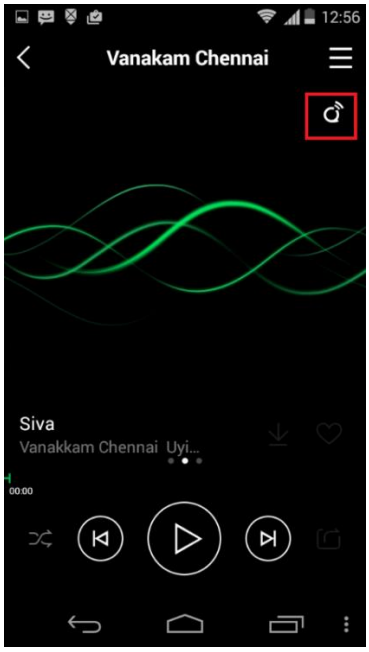

Figure 7-14: Device Selection Option

Step 7. Select the LS enabled device

Figure 7-15: Device List

Playback from QQ music on the LS enabled device starts.

End - -

7.15.4. Spotify Connect

LibreSync enables you to stream music via Spotify connect.

Spotify on LS-Enabled speakers supports to Save / Play/ Delete presets, for more information on Spotify Preset Actions refer to Message-Box # 75 in LUCI Document

(LibreWirelessTechNote-LS_Light_Weight_Universal_Control_Interface) available in LibreSync Document Portal.

To use the Spotify connect APP proceed as below.

Step 1. Register for Spotify premium account and get the Username and Password for the account

Step 2. Download the Spotify app from the App store/Play Store.

> **Note:**
>
> - The device name is listed as, LibreSync_xxxxxx
> - In Spotify free account, LS Device will not be listed in the Spotify speaker list.

To stream music from Spotify connect proceed as below.

Step 1. Reboot the LS enabled device and connect to the network.

Step 2. Connect iOS device/Android phone to the same network.

Step 3. Open the Spotify APP

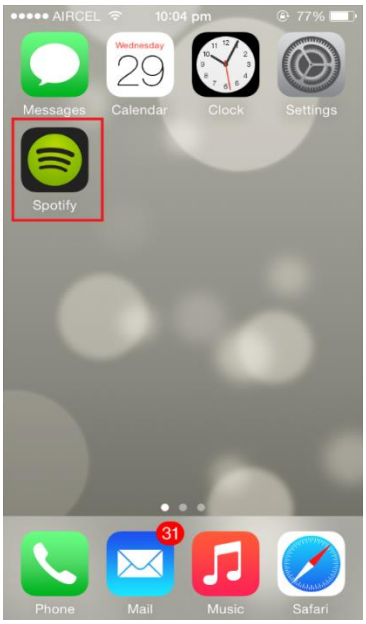

Figure 7-16: Spotify APP

Step 4. Login to Spotify, using the Username and Password received, during registration.

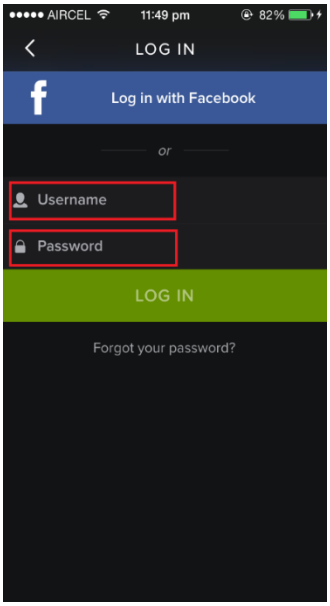

Figure 7-17: Spotify Login Screen

Step 5. Browse for songs in the Spotify Server

Step 6. In Now playing screen, select Speaker symbol in right bottom

Figure 7-18: Device Selection

Step 7. Select the LS enabled device

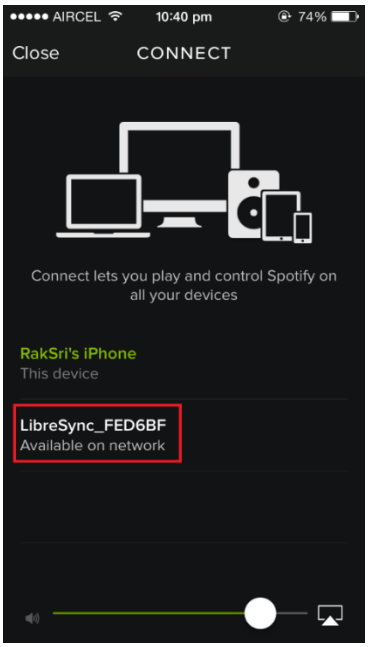

Figure 7-19: Device List

LS enabled device starts streaming music from Spotify Connect

End --

7.15.5. Deezer

Deezer on Libre platform can be used to stream music using the Libre APP's Remote Play option. For information on using the Libre APP for Deezer see section 3.3.2 in DDMS Usability Guide, ***LibreWireless-Usability_Guide_Dynamic_Direct_Multi-Node_Streaming***.

8. Data Sheet

580MHz MIPS® Core
IEEE 802.11 b/g/n 1x1 Wi-Fi
20/40MHz, 150 Mbps

Network Media Module

Product Data Sheet
Module : LS5B-N11S

Rev: 1.2

9. Introduction

Libre Wireless, LS5B-N11S is a module which includes a 580 MHz MIPS24K CPU core, 64MB of DDR2 DRAM memory and 16MB of Serial Flash, an 802.11n draft compliant 1T1R MAC/BBP/PA/RF, single port 10/100 Ethernet MDI interface, and a USB Host.
The LS5B-N11S, has very few external components required for 2.4GHz 11n wireless products. The LS5B-N11S employs Libre Wireless's 2nd generation 11n technologies for longer range and better throughput. The embedded high performance CPU can process advanced applications effortlessly, such as WIFI data processing without overloading the host processor. In addition, the LS5B-N11S has rich hardware interfaces (SPI/ I2S/ I2C/ UART/ USB) to enable many possible applications.

10. Module Feature Summary

Key Features

- LS5B-N11S is the small size and low power module for IEEE 802.11b/g/n wireless LAN.
- Embedded 1T1R 2.4G CMOS RF
- Embedded 802.11n 1T1R MAC/BBP w/MLD enhancement
- Support for both PCB connector and Notched SMT pad option
- 150Mbps PHY data rate
- 20Mhz/40Mhz channel width
- Legacy and high throughout modes
- Compressed block ACK
- WEP64/128, WPA, WPA2, WAPI engines
- QOS - WMM, WMM Power Save
- Hardware frame aggregation
- Supports 802.11h TPC
- MIPS 24KEc 580 MHz with 64 KB I-cache/32 KB D-cache

- 16-bit DDR2 64Mbytes
- Serial Flash 16Mbytes
- 3x UART
- 1x USB 2.0 HOST
- SD-XC (Class 10)
- Single port 10/100 Mbps Fast Ethernet MDI interface
- Slow speed I/O : GPIO, SPI, I2C, I2S, UART, and JTAG
- I2S interface supports 24-bit/192kHz (slave mode)
- I/O: 3.3 V

11. LibreSync Features

LibreSync modules have extensive software features for connected media streaming and control applications. These include system level control and interface features as well as networking features.
Please refer to the full "LibreSync Feature List" for details of supported features.

> **Note:** Platform features can vary based on module configuration/derivatives and commercial engagement details.

12. Block Diagram

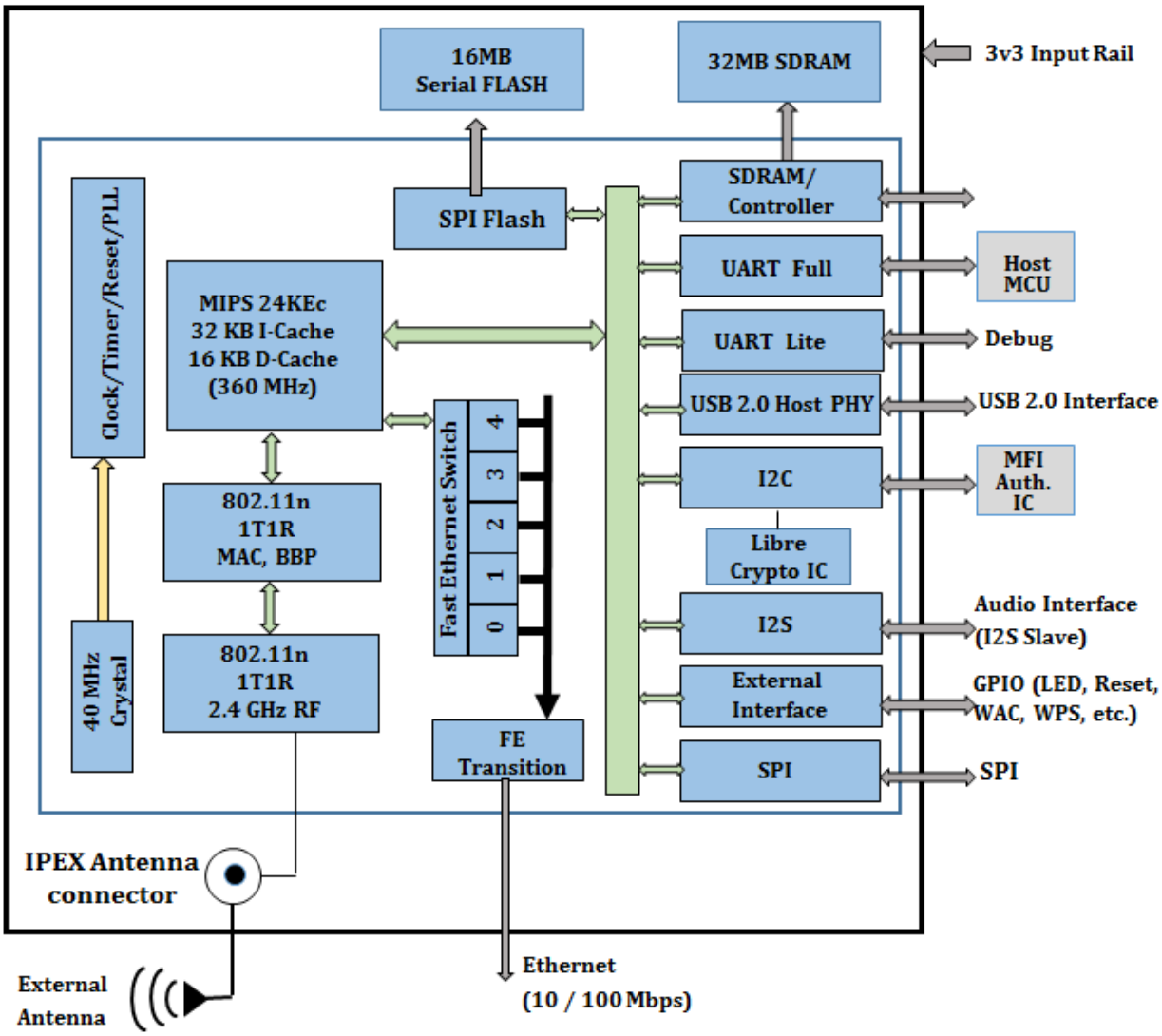

Figure 4-1: LS5B-N11S Block Diagram

13. Specifications

13.1. General Specification

Parameter	Description / Values
Model	LS5B-N11S-A
Product Name	LibreSync LS5B Network Media Module
Chipset	MT7688A
Standard	IEEE802.11b / g /n
Data Transfer Rate	1, 2, 5.5, 6, 11, 12, 18, 22, 24, 30, 48, 54, and maximum Physical Layer rate of 150Mbps
Frequency Band	2412-2462 MHz
Power	3.3 V ± 5 % I/O supply voltage
Operating Temperature	-20˚C to +55˚C
Dimensions	47mm X 26.00mm X 5.1mm (L x W x H) ± 0.2mm

13.2. Module Current Consumption

Description	Typical (mA)	Maximum (mA)
Idle	180	190
Network Standby	TBD	TBD
Deep Sleep	TBD	TBD
Normal Operating Mode(AirPlay)	200	240
Normal Operating Mode (DDMS)	340	360

Note: The values mentioned in the table is measured at 3.3V rail.

13.3. RF Characteristics

Items	IEEE802.11b (11 Mbps mode unless otherwise specified)	IEEE802.11g (54 Mbps mode unless otherwise specified)	IEEE802.11n (MCS7 mode unless otherwise specified)
Mode	DSSS / CCK 11 Mbps	OFDM 54 Mbps	OFDM 135 Mbps
Channel Frequency	2412 ~ 2462MHz	2412 ~ 2462MHz	2412 ~ 2462MHz
RX	-83dbm	-70dbm	-65dbm
TX Power Level	17.5dbm	15.5dbm	14dbm
TX EVM	-27db	-30db	-31db
Normal Conditions	Temperature: 25˚C VDD: 3.3 V	Temperature: 25˚C VDD: 3.3 V	Temperature: 25˚C VDD: 3.3 V

13.4. Standard Test Conditions

The Test for electrical specification shall be performed under the following condition unless otherwise specified.

- Ambient Condition
  - Temperature: 25˚C, ± 5˚C
  - Humidity: 65 % ± 5% R.H
- Power Supply Voltage
  - 3.3V input power at the module.
- Current consumption over recommended range of supply voltage and operating conditions is as specified in the Table 5.2. When it is tested, it must be supplied at more than 2 times of maximal current.

14. Mechanical, Connectors and Interfaces

14.1. Physical Module

Module Dimension is 47mm x 26.0mm x 5.1mm

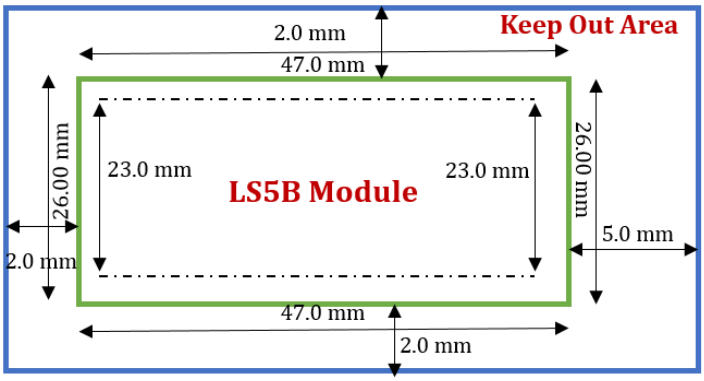

Figure 6-1: Physical Dimensions

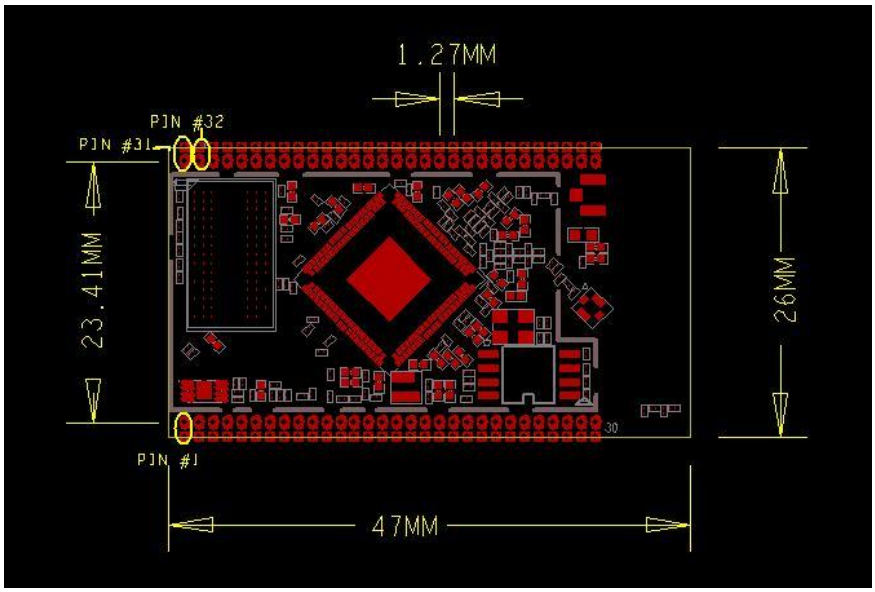

Figure 6-2: Physical Dimensions

Note:

- Dimensions are in millimeters
- Dimensional tolerance are as shown
- Design for 5mm physical Z height clearance (space for shields/clearance)
- Bottom shield is not part of standard build option (population option only)

14.2. Connector Layout

TBG

Figure 6-5: LS5B-N11S, Connector Layout

14.3. Module Pin Descriptions

Description	Function	Module Pin
3.3VD	3.3VD	1
Ground	GND	2
I2C_Clock	I2C_SCK	3
I2C_Data	I2C_SDA	4
WPS	GPIO0	5
POWER ON RESET I/P	PORST_N	6
UART1_TXD	UART_TXD1	7
UART1_RXD	UART_RXD1	8
UART2_TXD/GPIO20	UART_TXD2	9
UART2_RXD/GPIO21	UART_RXD2	10
DEBUG-UART TXD	UART_TXD0	11
DEBUG-UART RXD	UART_RXD0	12
Ground	GND	13
REFCLK_OUT	REFLCK_OUT	14
I2S_RXD	I2SDI	15
I2S_TXD	I2SWDO	16

I2S_LRCLK	I2SWS	17
I2S BIT CLOCK	I2SCLK	18
Ground	GND	19
GPIO	GPIO42	20
WLAN ACTIVITY LED/GPIO	WLAN_LED	21
GPIO	GPIO41	22
GPIO	GPIO40	23
Ground	GND	24
USB_DM	USB_D-	25
USB_DP	USB_D+	26
Ground	GND	27
GPIO	GPIO6	28
GPIO	GPIO39	29
OPTIONAL GPIO/NC	GPIO36	30
3.3VD	3.3VD	31
3.3VD	3.3VD	32
Ground	GND	33
SPCK	SPIS_SPCK/GPIO15	34
MOSI	SPIS_MOSI/GPIO17	35
MISO	SPIS_MISO/GPIO16	36
SPI-CS (SLAVE CHIPSELECT)	SPIS_CS/GPIO14	37
HOST_REQ/GPIO	GPIO18	38
Ground	GND	39

ETH PORT0 RX+	ETH_MDI_RP0	40
ETH PORT0 RX-	ETH_MDI_RN0	41
ETH PORT0 TX+	ETH_MDI_TP0	42
ETH PORT0 TX-	ETH_MDI_TN0	43
Ground	GND	44
SD_WP	SD_WP/GPIO22	45
SD_CD	SD_CD/GPIO23	46
SD_D3	SD_D3/GPIO28	47
SD_D2	SD_D2/GPIO29	48
SD_D1	SD_D1/GPIO24	49
SD_D0	SD_D0/GPIO25	50
SD_CMD	SD_CMD/GPIO27	51
SD_CLK	SD_CLK/GPIO26	52
Ground	GND	53
WAC/FACTORY RESTORE	GPIO38	54
ETHERNET ACTIVITY LED/GPIO	ETH_ACT_LED	55
NO CONNECT	NC	56
IR INPUT	GPIO19	57
NO CONNECT	NC	58
Ground	GND	59
NO CONNECT	NC	60

15. Design Requirement

Boot strap signals as mentioned in the Table 7-1, should not be driven by external devices until the module (SoC) comes out of reset.

> **Note:** This mandates implementation of appropriate power sequencing mechanism on base-board. That is, there has to be 150ms delay between Supplying power to LS module (SoC) and power to any other device on the base-board.

Boot Strap Signal	Description
UART_TXD0	Can be driven logic low but should not be driven logic high.
UART_TXD1	Can be driven logic high but should not be driven logic low.
GPIO36	Can be driven logic high but should not be driven logic low.
I2S_TXD	Can be driven logic low but should not be driven logic high.

Table 7-1: Boot Strap Signal Requirement

Typically 150 ms is the time taken to come out of the reset after power on of the module (SoC).

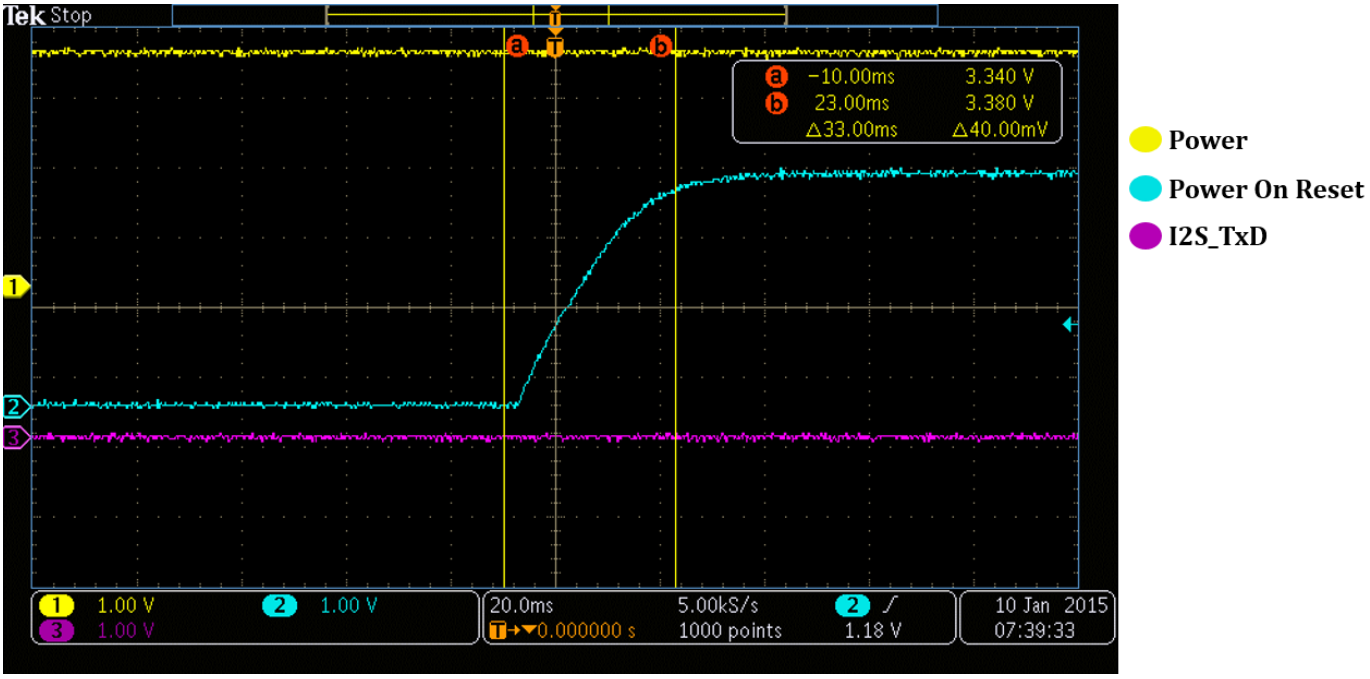

Figure 7-1: External Reset

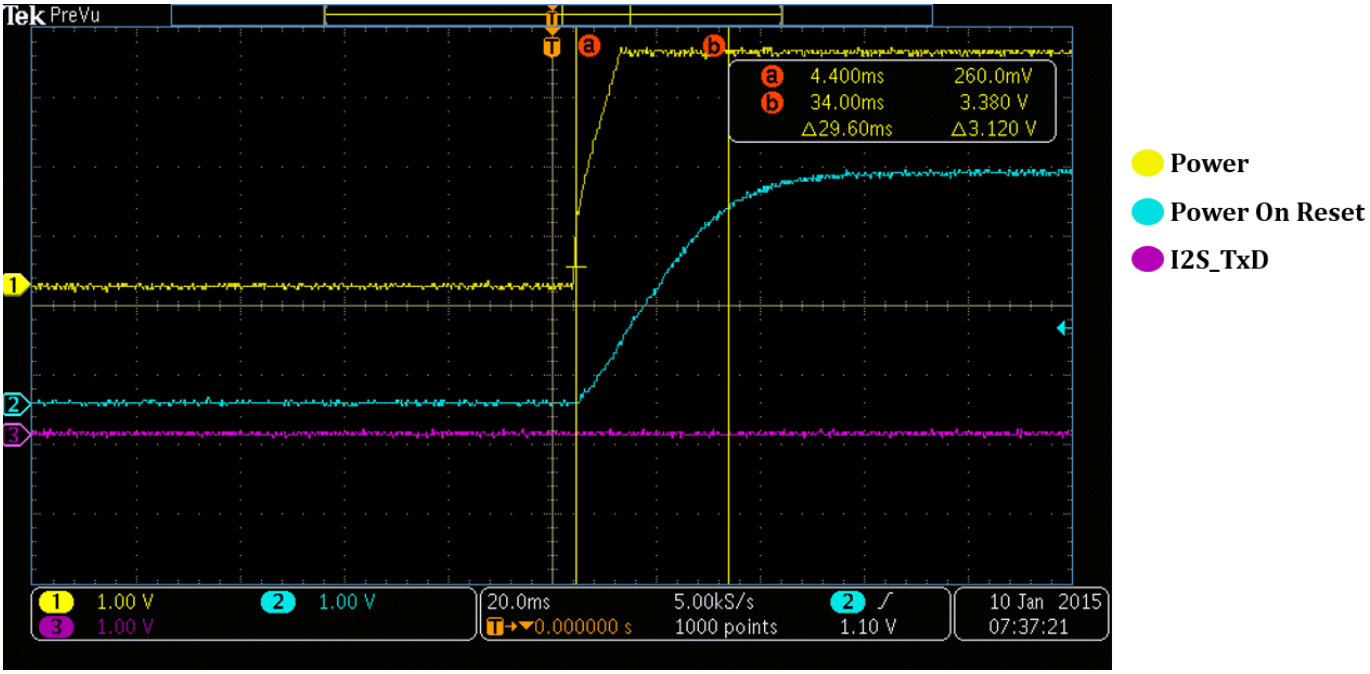

Figure 7-2: Power ON Sequence.

16. Ordering Guide

Product Number	Description
LS5B-N11S	External antenna, pin header
LS5B-N11S-A	PCB antenna, pin header
LS5B-N11S-S	External antenna, SMT
LS5B-N11S-AS	PCB antenna, SMT

17. Environmental

17.1. Operational Environment

Temperature Range

- Operation: -20˚C to +55˚C
- Storage: 0˚C to +40˚C

Humidity

- Operation: 10% to 90% (Non Condensing)
- Storage: 5% to 95% (Non Condensing)

Operating at absolute maximum conditions for extend periods can adversely affect the long-term reliability of the device.

17.2. Storage Conditions

Do not use or store modules in the corrosive atmosphere, especially where chloride gas, sulfide gas, acid, alkali, salt or the like are contained. Also, avoid exposure to moisture.

Assemble the modules within 6 months. Check the soldering ability in case of longer than 6 months.

18. Reference Schematics

18.1. SD Interface

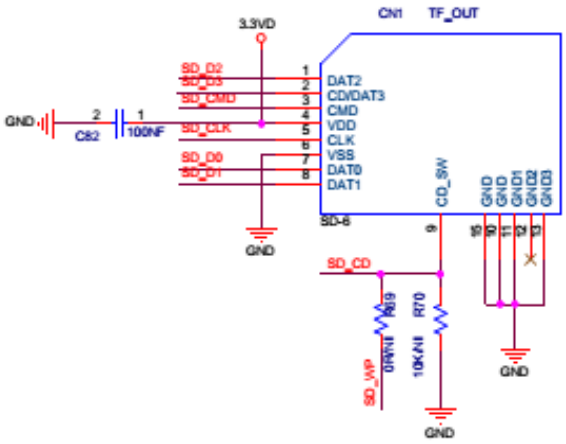

Figure9-1: SD Card

18.2. Reset and WPS

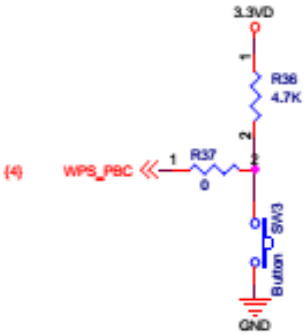

Figure 9-2: WPS

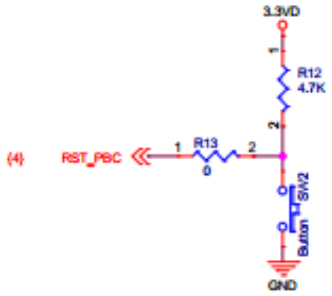

Figure 9-3: Reset

18.3. UART Interface

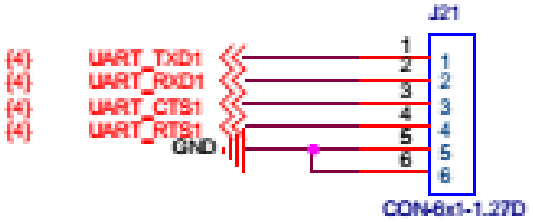

Figure 9-4: UART 1

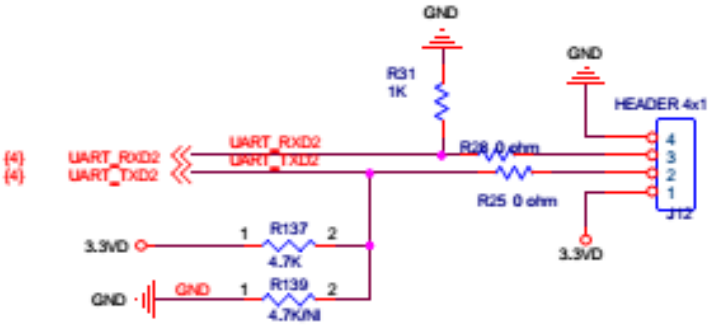

Figure 9-5: UART 2

18.4. USB Interface

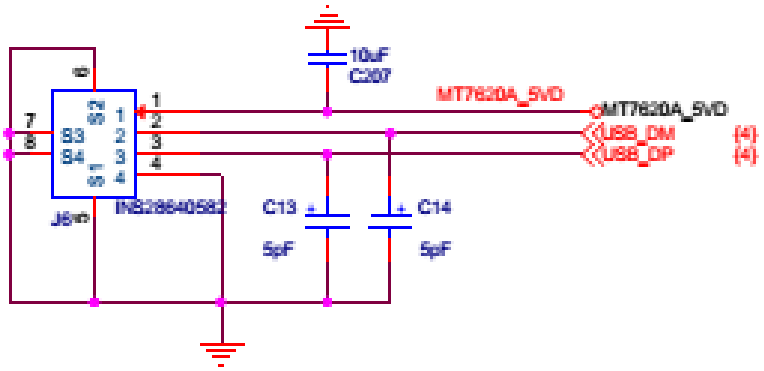

Figure 9-6: USB

18.5. Ethernet Interface

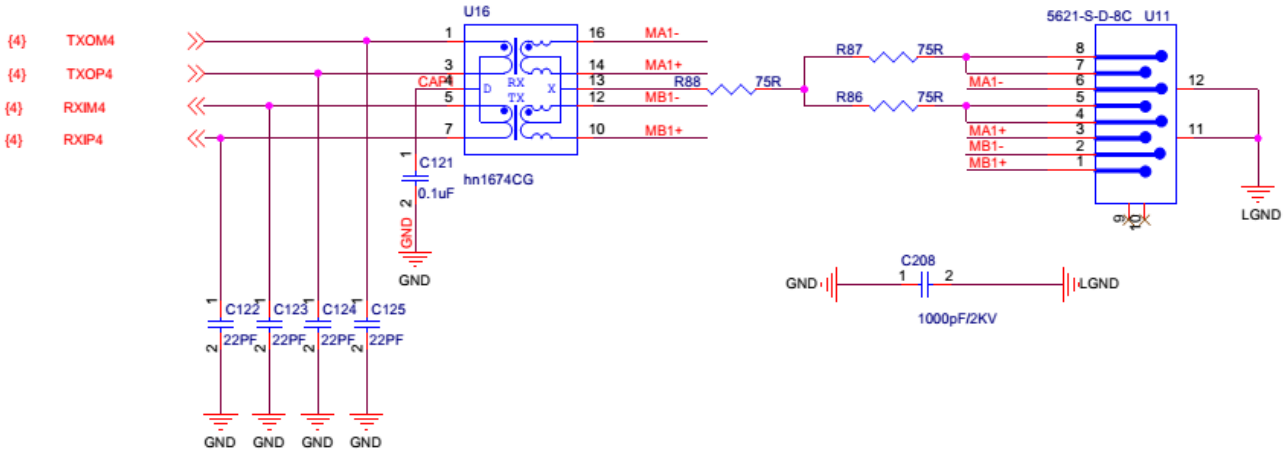

Figure 9-7: Ethernet

18.6. Power Supply

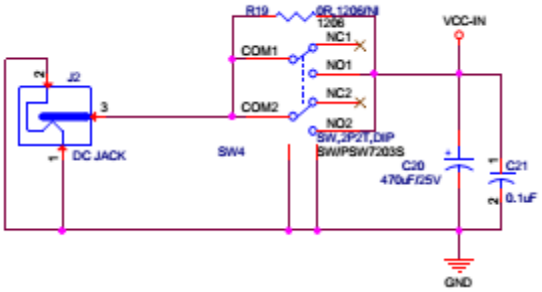

Figure 9-8: 9V DC Input

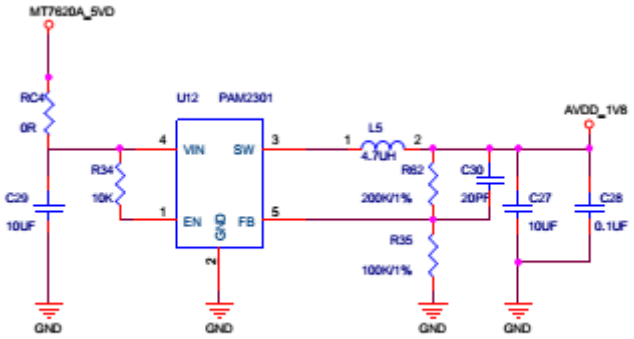

Figure 9-9: 1.8V DC Converter

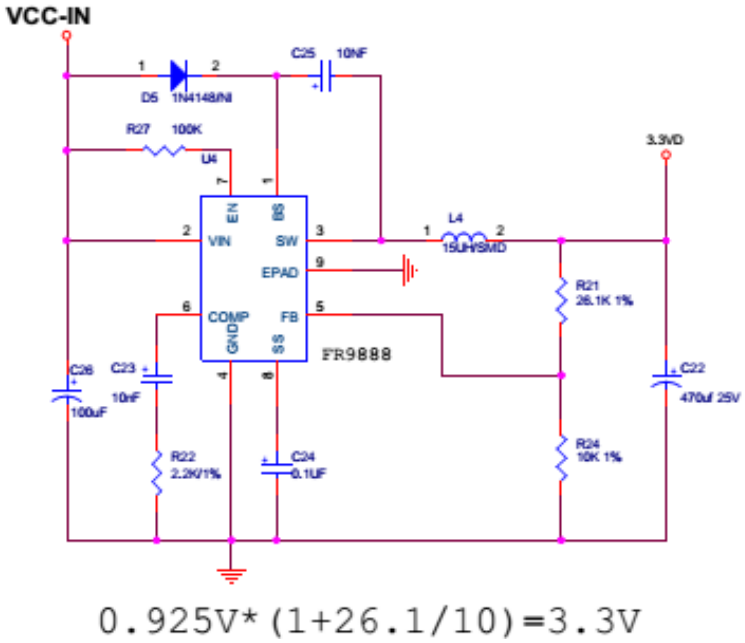

Figure 9-10: 3.3V DC Converter

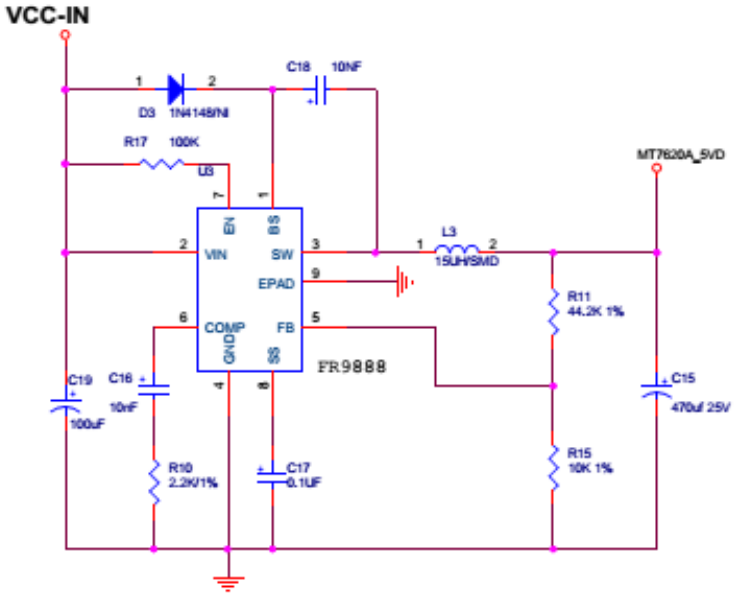

Figure 9-11: 5V DC Converter

18.7. MFI 2.0C Authentication Circuit

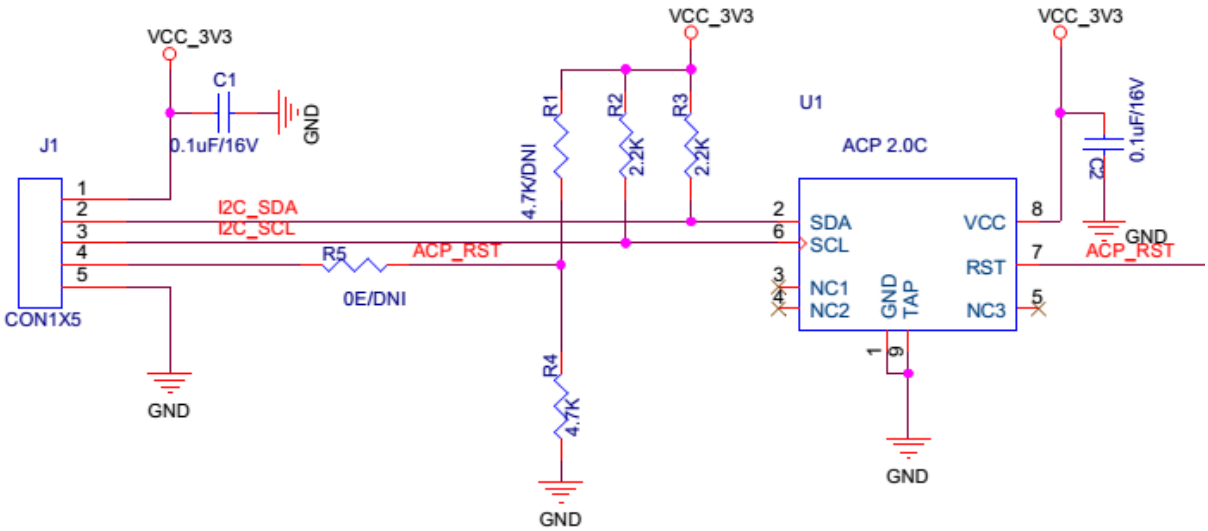

Figure 9-12: MFI 2.0C Authentication

19. Disclaimer

THE MATERIALS AND INFORMATION ARE PROVIDED "AS IS" WITHOUT WARRANTY OF ANY KIND, EITHER EXPRESS OR IMPLIED, INCLUDING BUT NOT LIMITED TO, THE IMPLIED WARRANTIES OF MERCHANTABILITY, FITNESS FOR A Pas RTICULAR PURPOSE OR NON-INFRINGEMENT.

We use reasonable efforts to include accurate and up-to-date information in this document. It does not however, make any representations as its accuracy or completeness of information. Use of this document is at your own risk. Libre Wireless Technologies, its suppliers, and other parties involved in creating and delivering this document's contents shall not be liable for any special, indirect, incidental, or consequential damages, including without limitation, lost revenues or lost profits.