WISR Long Range

Installation manual
No. IM0973673 A 01

Art. No: 0300150

09/2020
English

Art. No. 0300150

ORLACO
Specialised Camera Solutions

WISR Long Range, Art. No. 0300150

Safety
In order to guarantee safe operation, these safety instructions must be read before you start using this equipment.

- Do not open the enclosure. This can cause damage, short-circuiting or electrical shocks.
- Do not expose the equipment to extreme temperatures, this can cause deformation of the enclosure or damage to internal components.
- Repairs may only be undertaken by Orlaco.
- The equipment must be assembled as shown in this manual.
- If there have been alterations or changes to this equipment that have not been specifically approved by Orlaco, use of this equipment is not permitted.
- Warning! RF radiation. This device is using Radio Frequency (RF) signals to established a wireless video link. Keep a minimum separation distance of 0.2m between the WISR long range and the human body to comply with the regulation regarding human exposure to RF radiation.

Preface

Only connect this product to a SELV (Separated or Safety Extra-Low Voltage) or a double insulated power source. Ensure that a fuse 2A T has been installed in the power line of the WISR Long Range

Before you start using this equipment, please read this manual carefully and follow all instructions. This installation manual describes the functions of the equipment, outlines the connection options and explains how to put the equipment into operation. We recommend that you keep this manual in a safe place for reference purposes.

If you have any questions or issues concerning the operation of this equipment, consult the relevant section in the manual or contact the Orlaco Products BV Service department.

All data subject to change without notice. All dimensions are for commercial purpose only. The Orlaco products comply with the latest CE, ADR, EMC and mirror-directive regulations, where applicable. All products are manufactured in accordance with the ISO 9001 quality management system, IATF 16949 quality automotive, ISO 14001 environmental management systems, where applicable.

WISR Long Range system

Available documentation
https://www.orlaco.com/downloads
User manual: UM0972260 WISR
Data sheet:
DS0963572-0300150 WISR Long Range
DS0961110-0186000 Camera EMOS Ethernet

Package
- WISR Long Range router
- Power cable 2m

WISR Long Range system article numbers:

0300150	WISR Long Range
0290000	Tablet
0186010	Camera EMOS 120° Ethernet
0300011	Power cable

Contents

	Page
1. Introduction	**3**
2. Configuration	**5**
3. Operation	**5**
4. Assembly/Installation	**5**
4.1. Options	**5**
4.2. Connections	**5**
4.3. The photonView app	**5**
5. Dimensions	**6**
6. Technical specifications	**6**
7. Electrical connections	**7**
8. Maintenance and cleaning	**8**
9. FCC Statement	**8**
10. IC Statement	**8**
11. Disposal	**9**
12. General terms and conditions	**9**
13. Release notes	**10**

1. Introduction

The WISR Long Range sytem provides a Wi-Fi® connection within a view system. The WISR Long Range router is both a receiver and a transmitter. This document describes WISR Long Range system installation.

List of abbreviations

IP(-address)	Internet Protocol (Address). Unique address inside a network.
MAC (-address)	Media Access Control Address. Worldwide unique address for Ethernet devices.
ROI	Region Of Interest. Used to specify resolution or crops of the video image.
WISR	Wireless Sender Reciever.

IMPORTANT
Avoid mounting the WISR Long Range with connectors faced up.
Preferably mounting the WISR Long Range with connectors facing down.

Application possibilities of the WISR Long Range system, figure. 1.

2 camera system

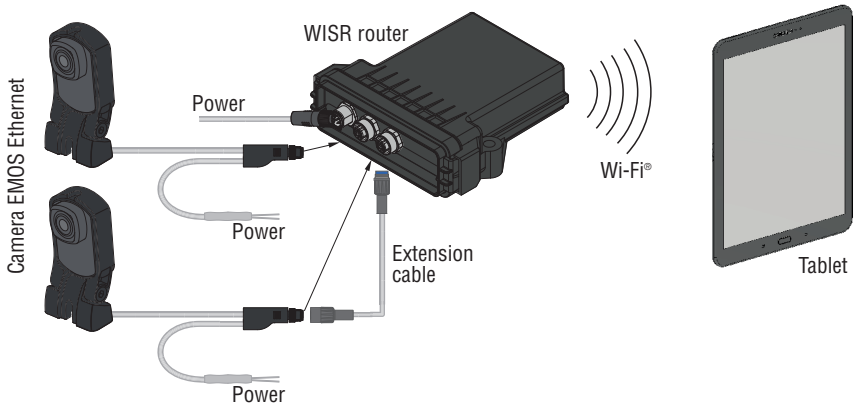

4 camera system

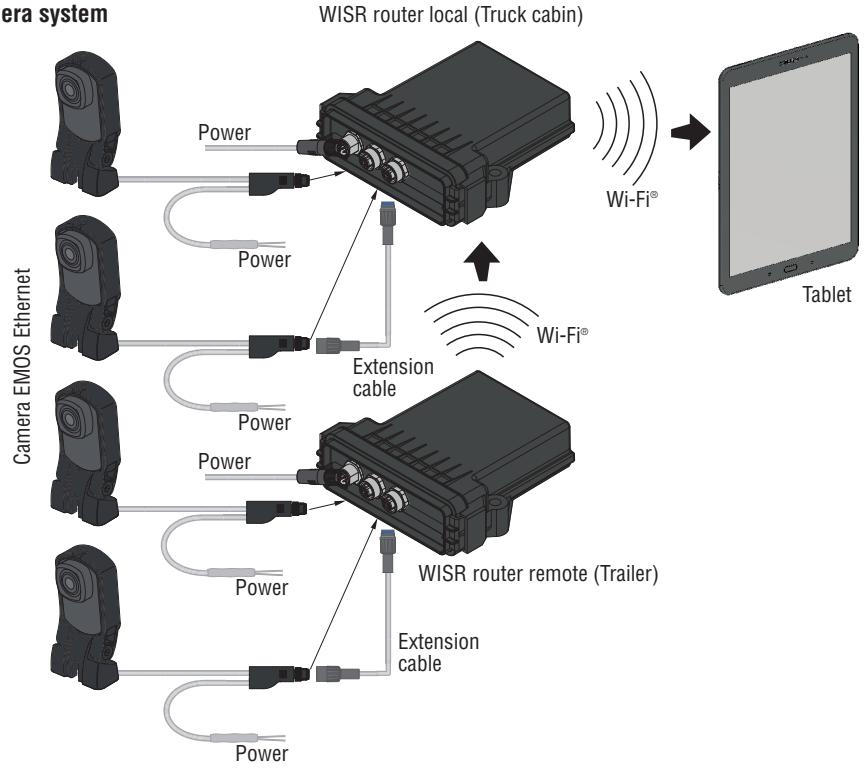

2. Configuration

To create a Wi-Fi® connection, there must always be a WISR Long Range router in the system. In a 2 camera system, one WISR Long Range router is connected with the tablet. For the 4 camera system a second WISR Long Range router set communicates with the other WISR Long Range router within a work zone. Figure 1 shows two systems using one or two WISRs.
To connect two cameras with the WISR Long Range, an extension cable must be used; This cable must be ordered separately, check with Orlaco.

Cable Uni Ethernet

1m; Art. No. 0321000	9m; Art. No. 0321060
2m; Art. No. 0321010	11m; Art. No. 0321070
3m; Art. No. 0321020	16m; Art. No. 0321080
5m; Art. No. 0321030	21m; Art. No. 0321090
7,5m; Art. No. 0321040	40m; Art. No. 0321100
8m; Art. No. 0321050	

Optionally, a holder for the tablet is available. See figure 2.
Tablet holder 8.5” to 11.125”. Article No. 2015880.
See Data sheet: DS0963137.

IMPORTANT:
Tablet charging adapter is not included

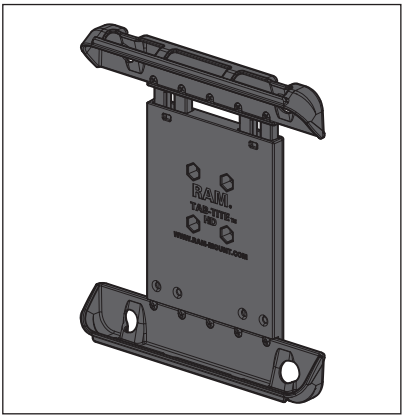

Figure 2

IMPORTANT
The best reception of the signal on the tablet can be obtained by placing the tablet and the WISR Long Range so that there is as little as possible metal between them.

3. Operation

The WISR Long Range works together with the Android app ‘PhotonView’. WISR Long Range firmware can be updated via Wi-Fi® with the tablet (Android Photon View app) with a Wi-Fi® connection. (Check with Orlaco to receive the software).
The Wi-Fi® antenna has an omnidirectional orientation. Typically the system will cover XXm. The maximum range is XXm, measured under optimal conditions in the open field. Local interference metal objects and weather conditions can cause the maximum range to decrease.

4. Assembly / Installation

4.1 Options

The WISR Long Range system can be mounted in various ways.
Depending on the use, there are various mounting options for the WISR Long Range system.

IMPORTANT
Avoid mounting the WISR Long Range with connectors faced up. Preferably mounting the WISR Long Range with connectors facing down.

4.2 Connections

Connecting the WISR Long Range system is easy. Connect the tablet to the WISR Long Range router and the Cameras using the PhotonView app. The detailed user instructions are listed in the User Manual UM0972260.
Connect the camera video cables to the 4p connections on the WISR Long Range router and the power cable with the 8p connector on the WISR Long Range router for the supply voltage.

4.3 The photonView app

The detailed user instructions are listed in the User Manual UM0972260.

5. Dimensions

See figure 3.

6. Technical specifications

General

Description: Wireless Send Receive (WISR Long Range).
Software: The WISR Long Range works together with the Android app 'PhotonView'.
Firmware: The WISR Long Range firmware can be updated via Wi-Fi® with the tablet (Android Photon View app).
Weight: 0,30kg.
Operating temperature: -40ºC to +85ºC.

Radio

Antenna type: 2x Internal Right Hand Circular Polarized antennas with MIMO technics.
Antenna orientation: Directional antenna, 90 Degrees.
Frequency range: Ch 1-13 (2412-2472 MHz) depending on national requirements.
Max. Transmitting power: 1-26 dBm E.I.R.P. Depending on national requirements.
Maximum range: 200m open field with wired monitor. Local interference, metal object and weather conditions will shorten the maximum distance.

Electrical

Rated voltage range: 9-32V/DC.
Rated power: 5W max.
Switch Inputs: 4 Camera selection inputs plus Handbrake and Tacho inputs 0-30V, 0-8V (low) / 8-30V (high).
Power cable: 2m M12F8 ow/Ferriet (Art. No. 0300011).

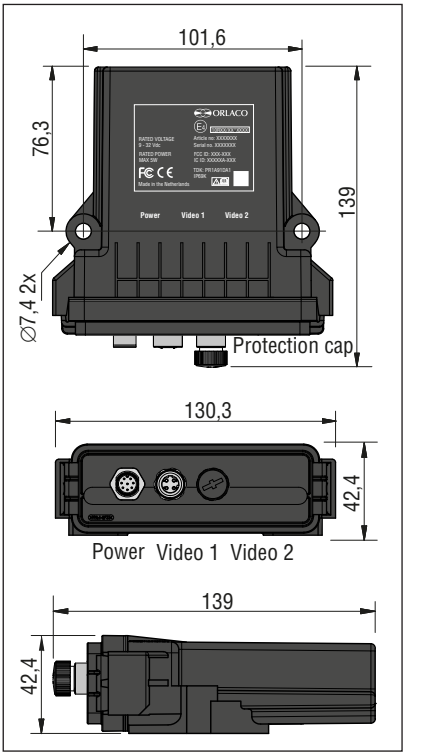

Figure 3

Mechanical

Enclosure; Automotive thermoplastic polymer (33% glass filled).
Shock resistance: 15,3G_{rms}, 5 to 2000, PSD.
Dust and water protection: IP67 according to IEC 60529; dust tight and protected against the effects of continuous immersion in water up to 1m for 30 minutes. IP69k according to DIN 40050-9: WISR can withstand a high pressure cleaning with water: 14-16L/min. 80°C and 100 bars flow.
Operating temperature -40°C...+85°C.

Certification

Approvals: CE, Regulation 10 FCC, IC.
CE EMC environments to be used: On-road trucks, off-road trucks, maritime, railway, industrial trucks.

7. Electrical connections

See figure 4.

Electrical connections WISR

Power socket

Pin	Cable wire color	Function
1	= Red	= Power
2	= White	= 0V
3	= Blue	= CAM 1
4	= Brown	= CAM 2
5	= White/Yellow	= CAM 3
6	= Green	= CAM 4
7	= Grey	= Aux 1
8	= Yellow	= Aux 2

Video 1, 2 sockets

Pin	Function
1	= Tx Data +
3	= Tx Data -
2	= Recv Data +
4	= Recv Data -

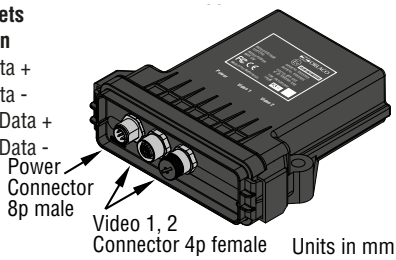

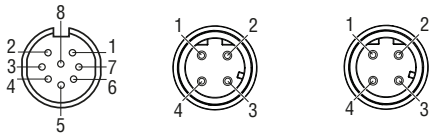

Power — Front side Male Connector

Video 1 — Front side Female M12 Connector D-Coded

Video 2

Figure 4

8. Maintenance and cleaning

Clean this product with a damp cloth. Do not use aggressive chemicals or abrasive cleaning agents.

9. FCC Statement

§15.21

Any changes or modifications not expressly approved by the party responsible for compliance could void the users authority to operate this equipment.

Either (§15.105) class B device

The equipment has been tested and found comply with the limits for a Class B digital device, pursuant to Part 15 of the FCC rules. These limits are designed to provide reasonable protection against harmful interference in a residential installation. This equipment generates, uses, and can radiate radio frequency energy and, if not installed and used in accordance with the manufacturer's instructions, may cause interference harmful to radio communications.

There is no guarantee, however, that interference will not occure in a particular installation. If this equipment does cause harmful interference to radio or television reception, which can be determined by tuning the equipment off and on, the user is encouraged to try to correct the interference by one of the following measures:

> Reorient or relocate the receiving antenna.

> Increase the separation between the equipment and receiver.

> Connect the equipment to an outlet on a circuit different from that to which the receiver is connected.

> consult the dealer or an experienced radio or TV technician for help.

10. IC Statement

(English) This device complies with Industry Canada license-exempt RSS standard(s).

Operation is subject to the following two conditions:

1) this device may not cause interference and

2) this device must accept any interference, including interference that may cause undesired operation of the device

(Français) Le présent appareil est conforme aux CNR d'Industrie Canada applicables aux appareils radio exempts de licence.

L'exploitation est autorisée aux deux conditions suivantes:

(1) l'appareil ne doit pas produire de brouillage, et

(2) l'utilisateur de l'appareil doit accepter tout brouillage radioélectrique subi, même si le brouillage est susceptible d'en compromettre le fonctionnement.

(English) Caution: Exposure to Radio Frequency Radiation.

To comply with RSS 102 RF exposure compliance requirements, for mobile configurations, a separation distance of at least 20 cm must be maintained between the antenna of this device and all persons. This device must not be co-located or operating in conjunction with any other antenna or transmitter.

(Français) Pour se conformer aux exigences de conformité CNR 102 RF exposition, pour des configurations mobiles, une distance de séparation d'au moins 20 cm doit être maintenue entre l'antenne de cet appareil et toutes les personnes. Cet appareil ne doit pas être colocalisés ou fonctionnant en conjonction avec une autre antenne ou transmetteur.

11. Disposal

Disassembly, removal and disposal. Local regulations for dealing with waste must be followed when disposing of disassembled components or entire units.

12. General terms and conditions

Orlaco Products BV is not liable for damage resulting from inadequate servicing, incorrect usage or alterations made to the equipment without informing the manufacturer in writing.

This installation manual has been made available by Orlaco Products BV. All rights reserved. No part of this manual may be reproduced and/or made public in printed form, in photocopy form or on microfilm, or in any other way, without the prior written permission of Orlaco. This also applies to the associated drawings and figures.

Orlaco reserves the right to make changes to components at any time without informing customers beforehand or directly. All dimensions given are for commercial purposes.

For information regarding repairs that is not covered in this manual, please contact the Orlaco Products BV service department.

This manual has been prepared with all due care and attention. However, Orlaco Products BV cannot be held responsible for any errors in this manual or any consequences thereof.

For additional technical information please contact the Orlaco Products BV Service department.

13. Release notes

Version A 01 First issue September 2020.

ORLACO

Orlaco is a Manufacturing company that specializes in making cameras and monitor systems for commercial vehicles, fork-lift trucks, cranes, off shore and maritime.

Our objective is to design and produce camera systems for the professional market that improve the drivers' view and increase operating efficiency.

At our facility in Barneveld we locate our design, manufacturing, warehousing and service department.

Vision is our mission®. Orlaco therefore deploys the development, manufacture, supply and service of camera and display systems that will improve safety and efficiency of all vehicles, machinery and vessels.
Our systems give the end user a view on each blind spot and will create comfort and improved working conditions. Our active approach will support market demands and innovations and will lead to enthusiastic ambassadors in the market; our customers.

For more information: www.orlaco.com

IM097367 3ENA01

ORLACO
Specialised Camera Solutions

www.orlaco.com