The technical data may be changed without prior notice

Address:No.1 Xiahe Rd,Jianggao,Baiyun,Guangzhou,China
Post Code:510450
Tel:+86-20-37166501
Website:www.dsppatech.com

SMART HOME MUSIC SYSTEM

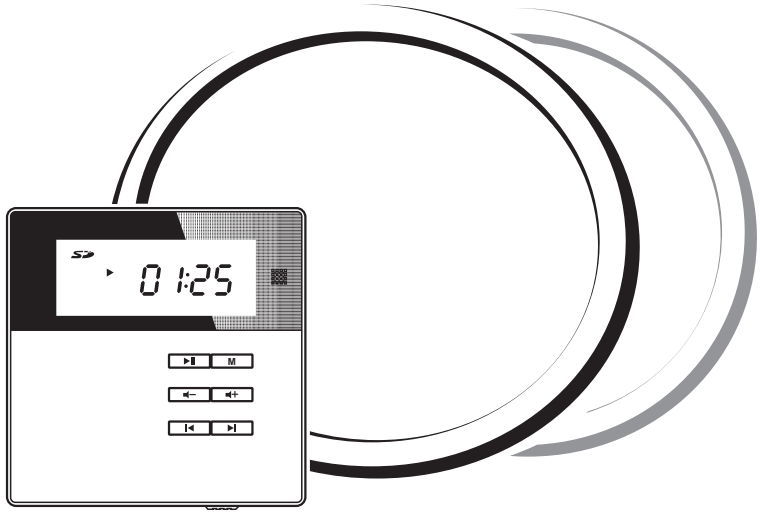

USER MANUAL

Guangzhou DSPPA Audio Co., Ltd.

Packing List

Component	Quantity
Smart music amplifier	1
Box	1
Remote control	1
Ceiling loudspeakers	2
User manual	1

Directivity curves

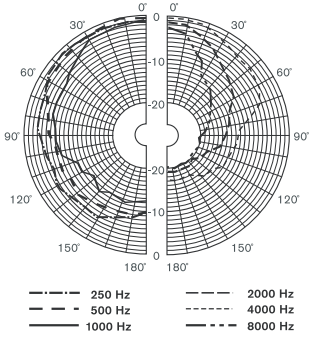

M1 Vertical directivity pattern

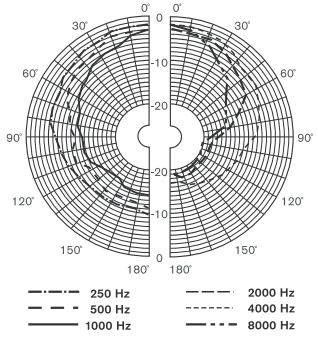

M1 Horizontal directivity pattern

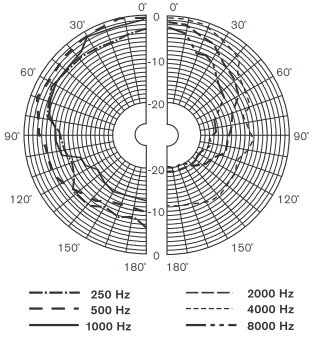

M2 Vertical directivity pattern

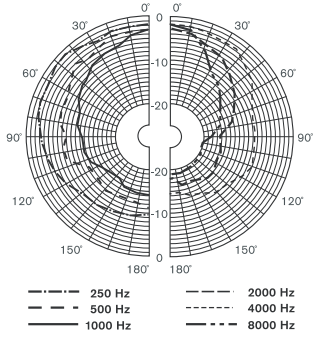

M2 Horizontal directivity pattern

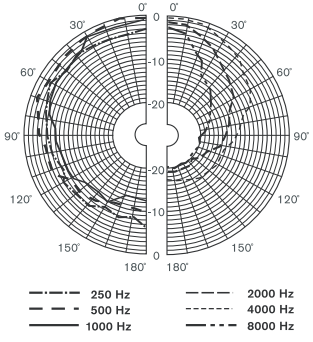

M3 Vertical directivity pattern

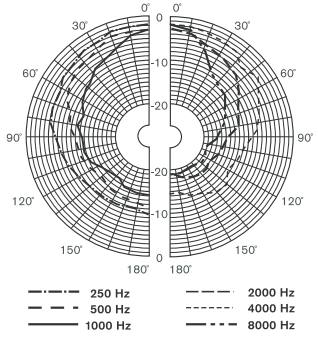

M3 Horizontal directivity pattern

Contents

Introduction 1
Profile of product 1
Smart music amplifier 1
Ceiling loudspeaker 1
Product Information 2
Smart music amplifier basic functions 3
Descriptions of music controller 3
On & Off, Standby 3
Smart music amplifier play function 4
System settings 5
Descriptions of remote controller 6
Installation and wired 7
Ceiling loudspeaker installation 7
Smart music amplifier wired 9
Functions of connection terminals 10
Smart music amplifier installation 10
Technical parameters 13
Frequency response and distortion characteristics 14
Directivity curves 15
Packing list 16

Introduction

Thanks for using our products. All our products are tested strictly before leaving the factory, with guaranteed quality.
For better installation, commissioning and use of the product, please read this manual in detail before installation.

Profile of Product

This system consists of a smart music amplifier and two ceiling loudspeakers, excellent sound quality, sleek design, small size and easy to install features.
Suitable for small building environments, including house, small office, retail shop, etc.
This system has three models available: M1, M2, M3. to meet your different needs.

Smart music amplifier

- Music sources: FM, USB, SD, AUX, Bluetooth.
- Support MP3, WAV, FLAC etc. compression & lossless audio formats.
- Support FM radio, support automatic & manual searching, can store 20 channels.
- Support AUX OUT.
- Wide voltage input, AC 100-240V, 50/60Hz.
- Built-in 2x10W class D amplifier.
- Support infrared remote control operation.
- Luxurious appearance, touch button operation, visible LCD display.

Ceiling loudspeaker

- Carbon alloy aluminum grille, with RAL white layer, can perfectly comply with any indoor venue.
- 6.5 inch driver unit, large and special magnetic circuit ensures strong power. (M3 model for coaxial units, or 6.5-inch woofer and 0.75-inch tweeters)
- Full range driver unit design; perfectly realize the reproduction of voice and music.
- Highly flame resistant material, comply with IEC 268-5 (PHC) standards, can work with RMS power for 100 hours continuously, can support instant output of twice RMS power.

Frequency response and distortion characteristics

M1 frequency response characteristics (dB SPL、1W、1m)

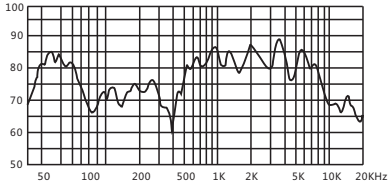

M1 distortion characteristic (THD< 1.5% 1W、1m、100Hz-10kHz)

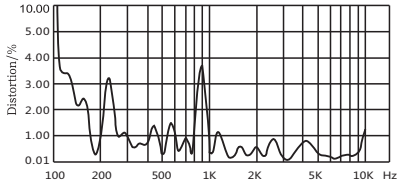

M2 frequency response characteristics (dB SPL、1W、1m)

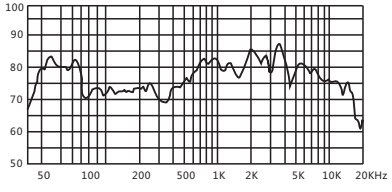

M2 distortion characteristic (THD< 1.5% 1W、1m、100Hz-10kHz)

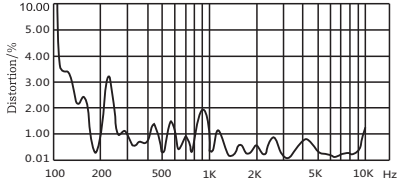

M3 frequency response characteristics (dB SPL、1W、1m)

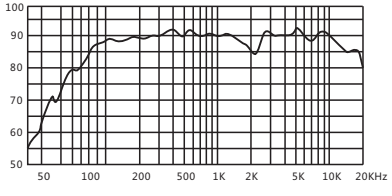

M3 distortion characteristic (THD< 1.5% 1W、1m、200Hz-10kHz)

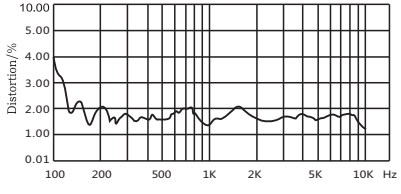

Technical parameters

Technical index \ Model				
Smart music amplifier	Power input	~100-240V		
	Output power	2 ×10W		
	Rated impedance	8Ω		
	Total harmonic distortion	≤0.03% (1KHz, 1W, 8Ω)		
	Signal-to-noise ratio	>81dB		
	Frequency response	20Hz – 20KHz		
	Sensitivity of auxiliary input (adjustable)	AUX:1.0V/500mV		
	Sensitivity of auxiliary output (adjustable)	AUX:0-1.0V		
	Audio format	MP3,WAV,FLAC,etc.		
	Bluetooth	BT2.1+EDR		
	Storage type	USB, SD card		
	Product dimension	86×86×38mm		
Ceiling loudspeaker	Driver unit	6.5”×1	6.5”×1	6.5”×1, 0.75”×1
	Frequency response	140Hz-16kHz	140Hz-16kHz	90Hz-18kHz
	Rated power (RMS)	5W	5W	10W
	Max power (RMS)	10W	10W	20W
	Max. SPL(1m)	92±2dB	92±2dB	93±2dB
	Sensitivity (1m, 1W)	100±2dB	100±2dB	103±2dB
	Storage temperature	-25℃ ~ +55℃	-25℃ ~ +55℃	-25℃ ~ +55℃
	product size	186mm×70mm	190mm×70mm	190mm×75mm
	Weight	0.5kg	0.52kg	0.68kg
Remote controller	Included angle of effective emitter region	60°		
	Effective remote-controlled distance	8-12m		
	Battery of remote controller	Cr2032		

Production Information

Smart music amplifier

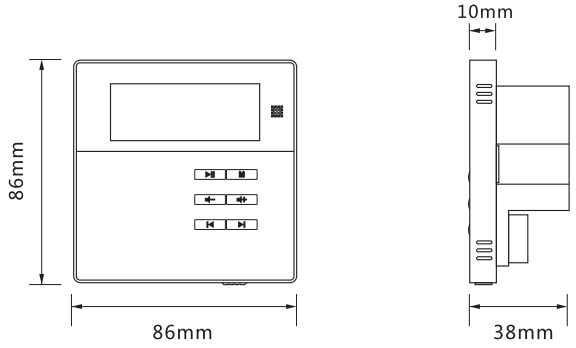

Ceiling loudspeakers

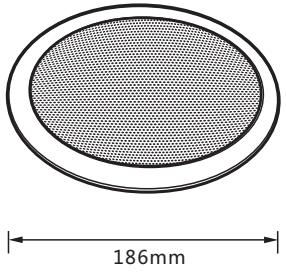

Smart music amplifier basic functions

Descriptions of music controller

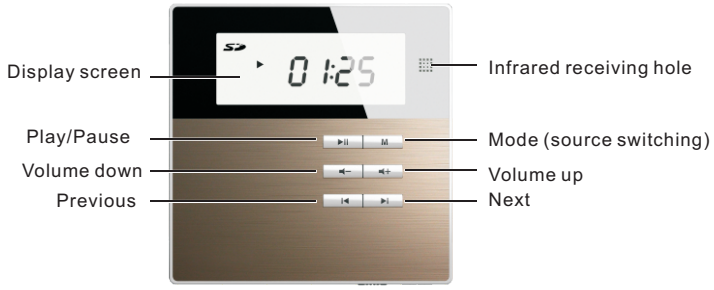

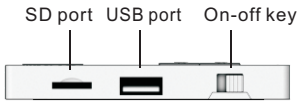

On & Off, Standby

Turn the on-off key left, and connect the AC terminal to electric supply.
Turn the on-off key right, it will be powered on. And turn the on-off key left, it will be powered off.

Standby:long press "**M**" to enter standby state,press "**M**" once to get stard.

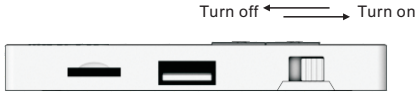

● **Concealed installation**

Note: **you buy the box depth of not less than 40mm.**

① Open a groove suitable for the box dimension on the wall needing installation, and based on the positions of screw holes at the four corners of the bottom surface of the box, drill holes on the wall groove, and prepare to connect lines.

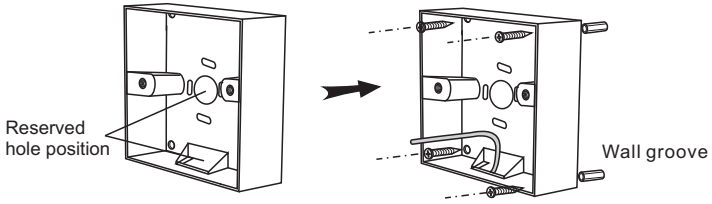

* Please arrange the line connection according to the actual hole position of the purchased box.

② Please refer to **Concealed installation** of step 3, step 4 and step 5 complete Setup.

● **Dismounting**

① Find the right side of the front panel and the base binding site of gap.

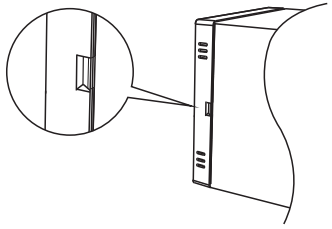

② Slotted screwdriver with buckle part of the alignment gap, carefully pry the clips.

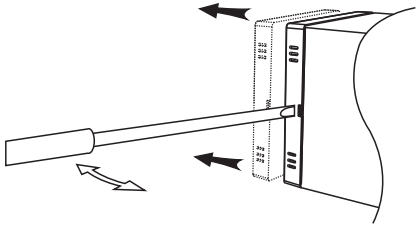

③ As show in the following figure, Select the two clips in the direction of A or B, outer open edge outward, so snap out of and be careful to separate the amplifier front panel and the base.

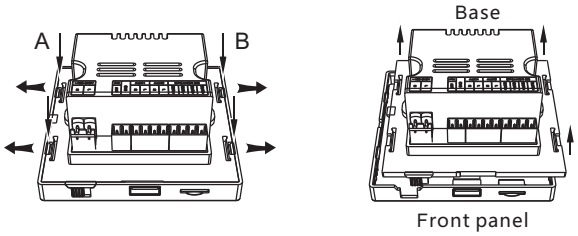

④ Connect the line end with the port on the base of the amplifier, and fix the base shell on the two mounting columns with two screws.

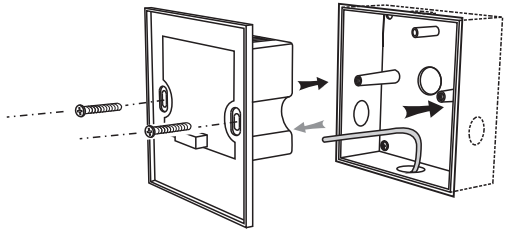

⑤ Buckle the amplifier front panel on the base on the wall, and check if the front panel buckles the base completely.

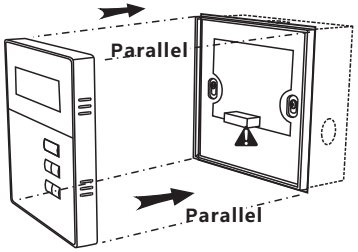

⚠ **Caution: When the current panel and fasten the base, where pins are inserted in front panel holes and pins must not be bent or damaged, otherwise it will cause damage to the amplifier seriously.**

Smart music amplifier play function

1.FM

Press "**M**" key to choose FM mode.
Automatic Search: long press "▶II" to start the automatic channel receiving, and the system will automatically save the effective radio stations.
Manual fine tuning mode: long press "I◀" or "▶I" to enter the manual fine tuning mode; and then short press "I◀" or "▶I" to manually adjust the current channel. If no key opertaion within 5 seconds, it will save the current channel and exit the mode.
Mute: short press "▶II" for mute FM play.
Channel switching: short press "I◀" or "▶I" to switch the saved channel.
Volume adjustment: short press "◀+" or "◀−" to increase or reduce the current volume.

2.USB device

Press "**M**" key to choose USB mode. When there is no USB device, the screen will display "NO" and flicker; and when there is a USB, it will read the card, and the screen will display "----" when there is no music or unable to decode, and it will play music automatically when there is music and able to decode.
Play control: short press short press "I◀" or "▶I" to switch to previous or next songs, and long press to fast forward or fast reverse; and short press "▶II" to play or pause.Volume adjustment: short press "◀+" or "◀−" to increase or reduce the current volume.

3.SD

Press "**M**" key to choose SD mode. When there is no SD, the screen will display "NO" and flicker; and when there is a SD, it will read the card, and the screen will display "----" when there is no music or unable to decode, and it will play music automatically, and the screen will display the play time progress when there is music and able to decode.
Play control: short press "I◀" or "▶I" to switch to previous or next songs, and long press to fast forward or fast reverse; and short press "▶II" to play or pause.
Volume adjustment: short press "◀+" or "◀−" to increase or reduce the current volume.

4. AUX

Press "**M**" key to choose AUX mode.
Play control: short press "▶II" to play or mute. When it is mute, the LCD screen will flicker.
Volume adjustment: short press "◀+" or "◀−" to increase or reduce the current volume.
Sensitivity adjustment: long press "I◀" or "▶I" to enter the sensitivity adjustemnt, which can be switched between S1 and S2.
(S1: input 500mV, S2: input 1000mV)

5.AUX OUT

This device can be used as a audio source output to other amplifier devices. when the AUX OUT interface is connected with other devices and the FM\USB\SD\AUX IN\ Bluetooth is selected for playback, the audio signal can be output to these devices to play synchronously.

6. Bluetooth connection

Press “M” key to choose BT mode. When there is no connection, the screen will display “BT” and flicker; and when the device is connected successfully, “BT” will be always on. The name of this product’s bluetooth displayed on other devices is “DABA adding six address codes”.

Volume adjustment: short press “ 🔈+ ” or “ 🔈− ” to increase or reduce the current volume.

System settings

First please prepare a computer, The device is connected to computer through the USB cable, open the configuration software in the computer.

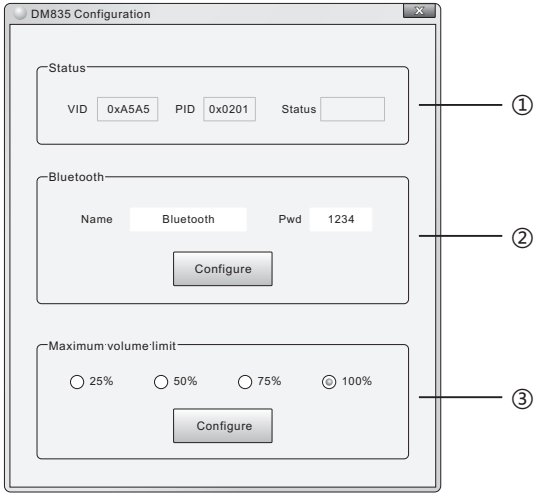

① Display device information connection status.

② Device Bluetooth name and password settings. enter the Bluetooth name and password number you want in the name and password box, click “Configure” to complete the modification.

Functions of connection terminals

Function	Power input		FM	GND	AUX IN		AUX OUT		Power amplifier output 8 Ω			
Symbol	N	L	ANT		R	L	R	L	OUTL+	OUTL-	OUTR-	OUTR+
Name	Zero line	Live wire	FM antenna	GND	Right	Left	Right	Left	Positive terminal of left speaker	Negative terminal of left speaker	Negative terminal of right speaker	Positive terminal of right speaker

Smart music amplifier installation

● **Concealed installation**

Note: **you buy the box depth of not less than 40mm.**

① Open a groove suitable for the box dimension on the wall needing installation, and based on the positions of screw holes at the four corners of the bottom surface of the box, drill holes on the wall groove, and prepare to connect lines.

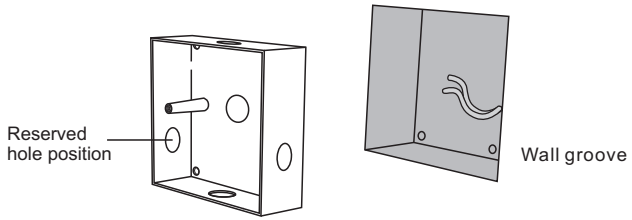

* Please arrange the line connection according to the actual hole position of the purchased box.

② Thread the line end through the reserved hole positions around the box, Put the box in the wall groove, and fix the box in the wall groove securely with four expansion screws.

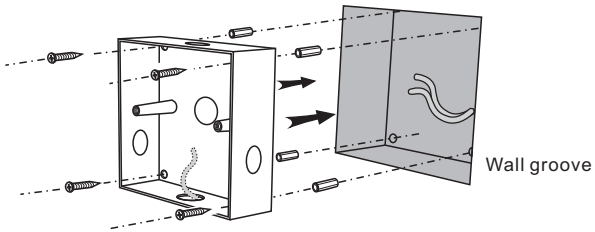

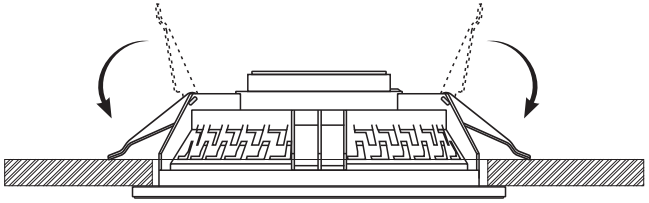

5. Finally, check the installation is secure.

Smart music amplifier wired

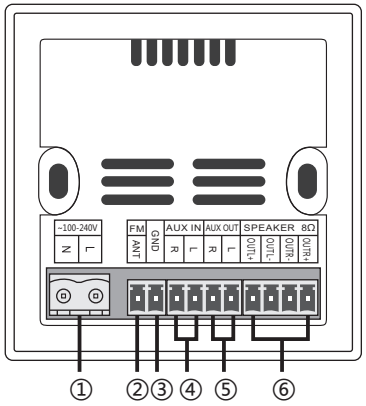

Descriptions of the connection port:

1. Power input: ~100-240V (2×RV 1.0mm² multistranded copper core flexible wire)
2. FM antenna
3. Signal ground
4. Audio input (2×0.3mm² double-shielded audio cable)
5. Audio output (2×0.3mm² double-shielded audio cable)
6. Power amplifier output (2×0.3mm² double-shielded audio cable)

Note: All wire connections shall not be naked.

③ Device maximum volume limit setting. allow users to set the maximum volume size of a device, there are 25%, 50%, 75%, 100% four options , to select one and click "Configure" to complete the modification.

Descriptions of remote controller

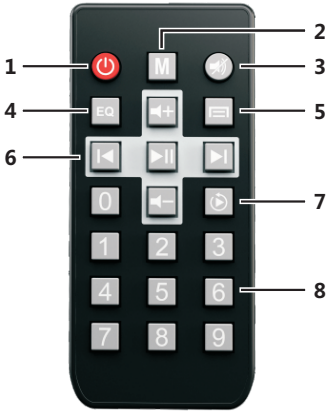

1.Standby switch.

2. Mode selection. Click the key, it will successively and circularly display FM radio receiver, USB, SD card, AUX, Bluetooth.

3. Mute.

4. Voice mode selection.

5. Menu (not available yet).

6. Play control area. Able to play/pause, move to previous and next songs, and control the volume.

7. Play mode selection. Click the key, it will successively and circularly display single cycle and order play.

8. Number key area. When it is under SD card mode, you can choose a track to play directly by pressing the number key; and when it is under FM mode, you can input an FM frequency directly by pressing the number key.

* Input range is 0870~1080, if the frequency is out of range.
For example : input 0875 is 87.5MHz.

Installation and wired

Ceiling loudspeakers installation

The size of the Space that best sound playback :50m² (Including 2 speakers) .

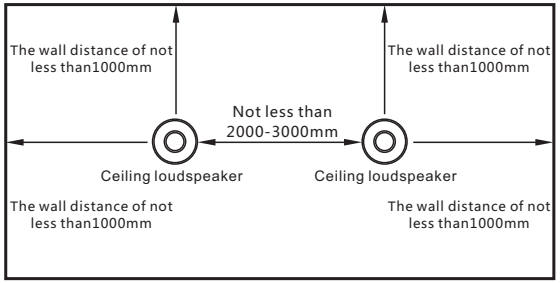

1.Please refer to the following figure, Select the corresponding size, install the mounting hole in the desire position .

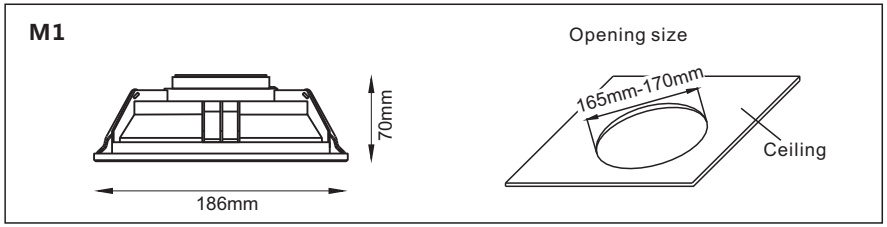

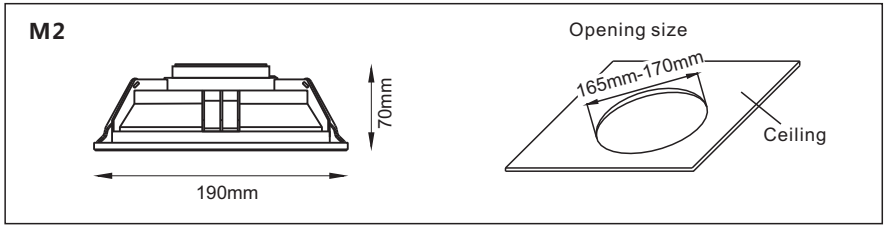

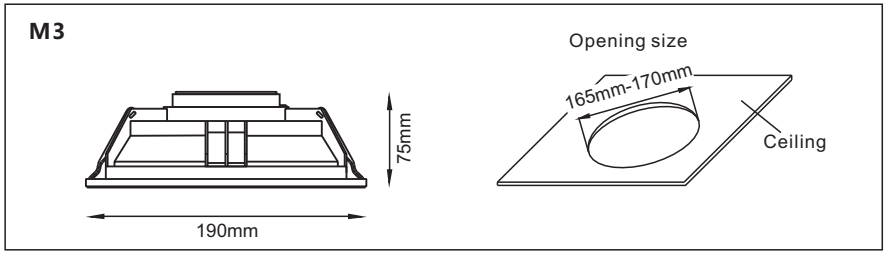

2. Connect the audio broadcast transmission line. and select the proper terminal for connection according to the actual power needs.

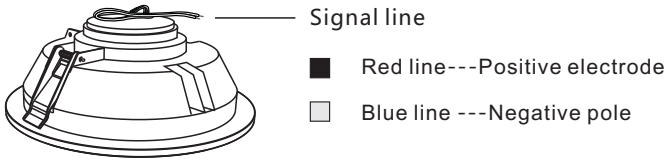

3. Pushing the loudspeaker on both sides of the spring clip up and maintain this status (To avoid spring break, it is recommended that this operation while wearing work gloves).

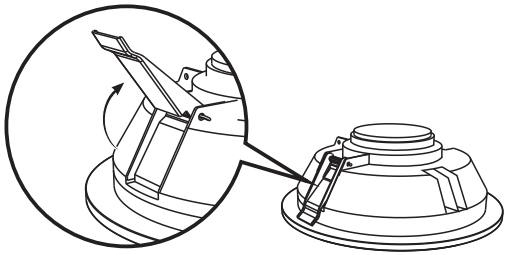

4. Carefully push the loudspeaker mounting hole, then slowly release the spring clips, push the loudspeaker so that it is embedded in the ceiling(see figure below).

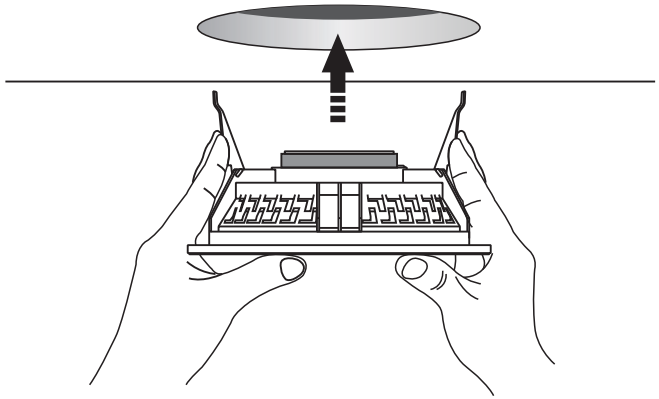

Warning Statement

This device complies with part 15 of the FCC Rules. Operation is subject to the following two conditions: (1) This device may not cause harmful interference, and (2) this device must accept any interference received, including interference that may cause undesired operation.

Any Changes or modifications not expressly approved by the party responsible for compliance could void the user's authority to operate the equipment.

Note: This equipment has been tested and found to comply with the limits for a Class B digital device, pursuant to part 15 of the FCC Rules. These limits are designed to provide reasonable protection against harmful interference in a residential installation. This equipment generates uses and can radiate radio frequency energy and, if not installed and used in accordance with the instructions, may cause harmful interference to radio communications. However, there is no guarantee that interference will not occur in a particular installation. If this equipment does cause harmful interference to radio or television reception, which can be determined by turning the equipment off and on, the user is encouraged to try to correct the interference by one or more of the following measures:
-Reorient or relocate the receiving antenna.
-Increase the separation between the equipment and receiver.
-Connect the equipment into an outlet on a circuit different from that to which the receiver is connected.
-Consult the dealer or an experienced radio/TV technician for help.