UltraSync LTE Cellular Module Installation Sheet

Product summary

This module adds LTE cellular capability to the UltraSync Self-Contained Hub to allow reporting of system events and enhanced interactivity.

Note: This module is designed for use only with the ZW-6400 Self-Contained Hub.

Figure 1: LTE cellular module

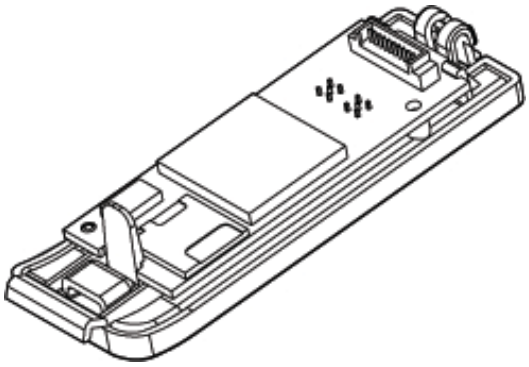

Installing the module

To install the module:

1. Remove the cover on the back of the hub to expose the cellular module bay.
2. Locate the 10-pin lead inside the hub and connect the LTE Cellular Module. Take care not to crimp any wires during installation.

PLEASE READ THE ULTRASYNC SELF-CONTAINED HUB REFERENCE GUIDE BEFORE USING THIS PRODUCT WHICH INCLUDES IMPORTANT SAFETY AND LEGAL INFORMATION INCLUDING WARNINGS, WARRANTY DISCLAIMERS, AND LIMITATIONS OF LIABILITY, AND COMPLETE INSTRUCTIONS. THE REFERENCE GUIDE IS AVAILABLE AT: http://www.interlogix.com/intrusion/product/ultrasync-selfcontained-hub

S'IL VOUS PLAÎT LIRE LE GUIDE DE REFERENCE POUR LE HUB UltraSync AVANT D'UTILISER CE PRODUIT QUI COMPREND LA SÉCURITÉ IMPORTANT ET JURIDIQUES INFORMATIONS, Y COMPRIS LES AVERTISSEMENTS, GARANTIE EXCLUSIONS, ET LIMITATIONS DE RESPONSABILITÉ ET INSTRUCTIONS COMPLETES. LE GUIDE DE RÉFÉRENCE EST DISPONIBLE AU: http://www.interlogix.com/intrusion/product/ultrasync-selfcontained-hub

Figure 2: LTE cellular module

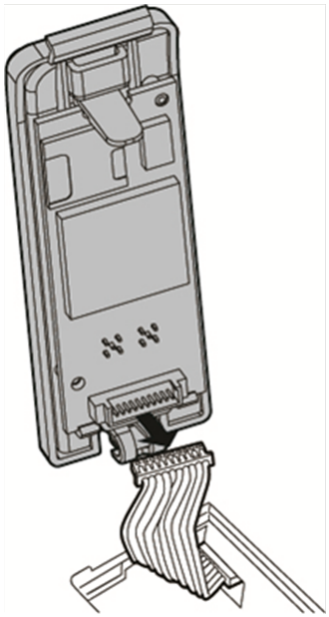

3. The LTE Cellular module includes a built in door that allows for the antenna(s) to exit the back of the hub.
4. Position the plastic door attached to the cellular module so the top hooks on to the back of the hub.
5. Press down to secure the bottom of the door. The door should click once in place.

Installing the antenna(s)

Note: The LTE Antenna is a two-in-one antenna designed to optimize performance and simplify installation.

To install the antenna(s):

1. Connect the two antenna lead wires to the connectors located on the cellular module plastic door. Make sure to firmly press the lead wires into the connectors for a secure fit.

P/N 230910 • REV B • ISS 071217

Figure 3: Installing antenna(s)

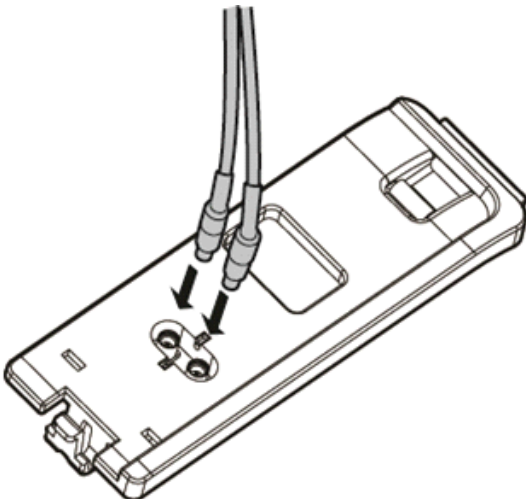

2. For applications where the hub is permanently mounted on a wall, create a hole to allow the antenna to drop down the wall.
3. For applications where the hub is mounted on a desktop stand, secure the antenna in a place that cannot be easily moved by using the included adhesive strip.

Note: Be sure to keep hub and cellular antennas away from electrical devices such as appliances, routers, cables boxes, as well as mirrors to optimize signal strength.

Commissioning the cellular module

To commission the module:

1. Once the cellular module is installed in the hub, it will automatically start to try and find a cellular network.
2. When provisioning the system on the UltraSync Portal, remember to select a Service Grade that includes Cellular.

Specifications

Voltage	5VDC (provided by panel)
Current	40 mA min / 750mA max at 9 V
External connector	Two MMCX
Dimensions (W × H × D)	97 x 31.5 x 20mm
Storage temperature	-34° to 60°C (-30° to 120°F)
Weight	190 g
Operating environment	
Temperature	0° to 49°C (32° to 120°F)
Relative humidity	maximum 90% noncondensing

Regulatory information

Manufacturer	Placed on the market by: UTC Fire & Security Americas Corporation, Inc. 3211 Progress Drive, Lincolnton, NC, 28092, USA.
US/C compliance	FCCID: N7NHL7588 IC: 2417C-HL7588

This equipment has been tested and found to comply with the limits for a Class B digital device, pursuant to part 15 of the FCC Rules. These limits are designed to provide reasonable protection against harmful interference when the equipment is operated in a commercial environment. This equipment generates, uses, and can radiate radio frequency energy and, if not installed and used in accordance with the instruction manual, may cause harmful interference to radio communications.

If this equipment does cause harmful interference to radio or television reception, which can be determined by turning the equipment off and on, the user is encouraged to try to correct the interference by one or more of the following measures:

- Reorient or relocate the receiving antenna.
- Increase the separation between the equipment and receiver.
- Connect the equipment into an outlet on a circuit different from that to which the receiver is connected.
- Consult the dealer or an experienced radio/TV technician for help.

This class B digital apparatus complies with Canadian ICES-3B.
Cet appareil numérique de la classe B est conforme à la norme NMB-003 du Canada.

Caution: Any changes or modifications not expressly approved by the party responsible for compliance to this equipment would void the user's authority to operate this device.

This Device complies with FCC & ISED radiation exposure limits.

This device complies with Industry Canada's licence-exempt RSSs. Operation is subject to the following two conditions:
(1) This device may not cause interference; and
(2) This device must accept any interference, including interference that may cause undesired operation of the device.

Le présent appareil est conforme aux CNR d'Industrie Canada applicables aux appareils radio exempts de licence. L'exploitation est autorisée aux deux conditions suivantes :
1) l'appareil ne doit pas produire de brouillage;
2) l'utilisateur de l'appareil doit accepter tout brouillage radioélectrique subi, même si le brouillage est susceptible d'en compromettre le fonctionnement.

Contact information

For contact information, go to www.utcfireandsecurity.com or www.interlogix.com

Customer support (US)

For customer support, contact
Interlogix Technical Support
Tel +1 855 286 8889 (Option 2)
techsupport@interlogix.com
www.interlogix.com

Copyright © 2017 UTC Fire & Security. All rights reserved.

P/N 230910 • REV B • ISS 071217