LED touch display

Operating Manual

Before connecting, operating or adjusting this product, please read the manual completely.
Please keep this manual for future reference.

Contents

Important Information	**1**
Important Safety Precautions	**2**
Important Notice	**4**
Identification of Controls	**5**
Remote Control	**6**
Connections	**8**
Basic Operations	**11**
Picture Adjustment	**13**
Audio Adjustment	**15**
Adjusting Basic Settings & Adjusting Computer Settings	**16**
Troubleshooting	**17**
Specifications	**18**

CHILD SAFETY

It makes a difference how and where you use your flat panel display

As you enjoy your new product, keep these safety tips in mind

The issue

The home theater entertainment experience is a growing trend, and larger displays are popular purchases. However, displays are not always supported on the proper stands or installed according to the manufacturer's recommendations. We and the consumer electronics industry are committed to making home entertainment enjoyable and safe.

Displays *that are inappropriately placed on dressers*, *bookcases*, *shelves*, *desks*, *speakers*, *chests*, *or carts may fall over and cause injury*.

Tune into safety

- One size of display stand does not fit all. Use only a display stand rated for the weight of your display.
- Carefully read and understand all enclosed instructions for proper use of this product.
- Don't let children climb on or play with entertainment system furniture and displays.
- Don't place displays on furniture that can easily be used as steps, such as a crate or chest of drawers.
- Remember that children can become excited while watching a program, especially on a "larger-than-life" display.
  Make sure that you place or install the display where it can not be pushed, pulled over, or knocked down.
- Make sure that you route all cords and cables so that they cannot be pulled or grabbed by curious children.

Wall mounting

If you decide to wall mount your display, always remember:

- One size of wall mount does not fit all. Use only a wall mount rated for the weight of your display and that has been recommended by this display manufacturer, listed in this manual, or otherwise listed by an independent laboratory as suitable for your display.
- Follow all instructions supplied by the display and wall mount manufacturers.
- If you have any doubts about your ability to safely wall mount your display, get help from a professional installer.
- Make sure that the wall where you are mounting the display is appropriate. Some wall mounts are not designed to be mounted to walls backed with steel studs or cinder blocks. If you are unsure, ask a professional installer.
- Display can be heavy. At least two people are required for safe wall mount installation.

CEA®
Consumer Electronics Association

Important Safety Precautions

This symbol indicates that dangerous voltage constituting a risk of electric shock is present within your IFP. This label is located on the back of your display.

This symbol indicates that there are important operating and maintenance instructions in the literature accompanying your display.

1 Read these instructions.
2 Keep these instructions.
3 Heed all warnings.
4 Follow all instructions.
5 Do not use this apparatus near water.
6 Clean only with dry cloth.
7 Do not block any ventilation openings. Install in accordance with the manufacturer's instructions.
8 Do not install near any heat sources such as radiators, heat registers, stoves, or other apparatus (including amplifiers) that produce heat.
9 Do not defeat the safety purpose of the polarized or grounding-type plug. A polarized plug has two blades with one wider than the other. A grounding type plug has two blades and a third grounding prong. The wide blade or the third prong are provided for your safety. If the provided plug does not fit into your outlet, consult an electrician for replacement of the obsolete outlet.
10 Protect the power cord from being walked on or pinched particularly at plugs, convenience receptacles, and the point where they exit from the apparatus.
11 Only use attachments/accessories specified by the manufacturer.
12 Use only with the cart, stand, tripod, bracket, or table specified by the manufacturer, or sold with the apparatus. When a cart is used, use caution when moving the cart/apparatus combination to avoid injury from tip-over.

13 Unplug this apparatus during lightning storms or when unused for long periods of time.
14 Refer all servicing to qualified service personnel. Servicing is required when the apparatus has been damaged in any way, such as power-supply cord or plug is damaged, liquid has been spilled or objects have fallen into the apparatus, the apparatus has been exposed to rain or moisture, does not operate normally, or has been dropped.
15 The *wall plug* is the disconnecting device. The plug must remain readily operable.
16 Remote control batteries should not be exposed to excessive heat such as sunshine, fire, or the like.
17 The apparatus should not be exposed to dripping or splashing, and no objects filled with liquids, such as vases, should be placed on the apparatus.

WARNING

Electric shock hazard

To reduce the risk of fire or electric shock, do not remove any cover or expose the device to rain or moisture. No user-serviceable parts are inside. Refer servicing to qualified service technicians.

Lightning

For added protection for your device receiver during a lightning storm, or when it is left unattended and unused for long periods of time, unplug it from the power outlet and disconnect any antenna or cable system. This helps prevent property damage and personal injury from lightning and power line surges.

Power lines

An outside antenna system should not be located in the vicinity of overhead power lines or other electric light or power circuits, or where it can fall into such power lines or circuits. When installing an outside antenna system, extreme care should be taken to keep from touching such power lines or circuits as contact with them might be fatal.

Handling the LCD panel

- Your display's screen is made of glass. Do not drop you display or hit, jolt, or press hard against the LCD panel. If the screen breaks, be careful of broken glass.
- If the LCD panel is broken, make absolutely sure that you do not touch the liquid in the panel. This may cause skin inflammation.
- If the liquid gets in your mouth, immediately gargle, rinse, and consult with your doctor. Also, if the liquid gets in your eyes or touches your skin, consult with your doctor after rinsing for at least 15 minutes or longer in clean water.

Replacement parts

When replacement parts are required, make sure that the service technician uses replacement parts specified by the manufacturer that have the same characteristics as the original part. Unauthorized substitutions may result in fire, electric shock, personal injury, or other hazards.

Safety check

After completing any service or repair to this device, ask the service technician to perform routine safety checks to determine that your display is in correct operating condition.

Power source

Operate your display only from the type of power source indicated on the marking label.If you are not sure of the type of power supplied to your home, consult an electrician or your local power company.

Servicing

These servicing instructions are for use by qualified service personnel only. To reduce the risk of electric shock, do not perform any servicing other than that contained in the operating instructions unless you are qualified to do so.

CAUTION

Damage requiring service

Unplug this display from the power outlet and refer servicing to qualified service personnel under the following conditions:

- When the power supply cord or plug is damaged or frayed.
- If liquid has been spilled or objects have fallen into your display.
- If your display has been exposed to rain or water.
- If your display does not operate normally by following the operating instructions. Adjust only those controls that are covered by the operating instructions because incorrect adjustment of other controls may result in damage and will often require extensive work by a qualified technician to restore your display to its normal operation.
- If your display has been dropped or damaged in any way.
- When your display exhibits a distinct change in performance.

Mobile telephone warning

To avoid interference with your display picture and sound, operating problems, or even damage, keep your cordless and cellular telephones away from the display.

End of life directives

Your display may contain materials that are regulated for environmental reasons. Your display also contains materials that can be recycled and reused. To help protect the environment, contact your local authorities for information about disposal or recycling and about finding a recycler in your area before you dispose of your display.

Non-active pixels

The LCD panel contains almost 3 million thin film transistors, which provide exceptionally sharp video quality. Occasionally, a few non-active pixels may appear on the screen as a fixed blue, green, or red point. These non-active pixels do not adversely affect the performance of your display, and are not considered defects.

Important Notice

About Location/ Environment

Do not use in hot and cold rooms (locations)

- When the unit is used in rooms (locations) with low temperature, the picture may leave trails or appear slightly delayed. This is not a malfunction, and the unit will recover when the temperature returns to normal.
- Do not leave the unit in a hot or cold location. Also, do not leave the unit in a location exposed to direct sunlight or near a heater, or in high humidity, as this may cause the cabinet to deform and the screen to malfunction, and affect the display's performance .
- **Environment condition:**
  Operating temperature: 5°C – 35°C
  Operating humidity: 20 – 80 % (no moisture condensation)
  Storage temperature: -15°C – 45°C
  Storage humidity: 10 – 80 %
  Atmospheric pressure: 86 kPa ~ 106 kPa

About After-Image

The extended use of fixed image program material can cause a permanent after-image on the screen.

This background image is viewable on normal programs in the form of a stationary fixed image. This type of irreversible screen deterioration can be limited by observing the following steps:

A. Reduce the brightness/contrast setting to a minimum viewing level.

B. Do not display the fixed image for extended periods of time.

C. Turn the power off when not in actual use.

Important Information Regarding Use of Video Games, Computers, Captions or Other Fixed Image Displays.

- Do not allow a still picture to be displayed for an extended period, as this can cause a permanent after-image to remain on the screen.

  Examples of still pictures include logos, video games, computer images, teletext and images displayed in 4:3 mode.

CAUTIONS:

- The permanent after-image on the screen resulting from fixed image use is not an operating defect and as such is not covered by the warranty.
- This product is not designed to display fixed images for extended periods of time.

Cleaning and Maintenance

To clean this unit, wipe with a soft, dry cloth.

Clean the cabinet with a soft, lint-free cloth, If the cabinet is especially dirty, moisten a soft, lint-free cloth in a weak detergent solution, squeeze the excess moisture from the cloth, then wipe the cabinet with the cloth. Use a clean cloth to dry the cabinet.

- Clean the screen with a soft, lint-free cloth.
- Use eyeglass cleaner to remove stubborn dirt from the screen.
- Never use alcohol, paint thinner or benzine to clean this unit.

Carrying or Moving the display

- When you move the display , hold the frame of the display .
- Be aware of the danger or harm which may caused by carrying or moving the display , as the bezel is very thin.
- When transporting, do not subject the unit to shocks or vibration, or excessive force.

Identification of Controls

Main Unit (front/side view)

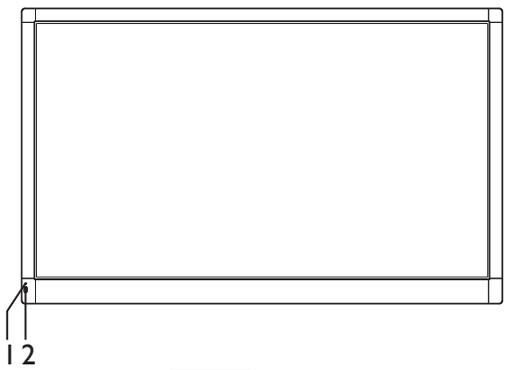

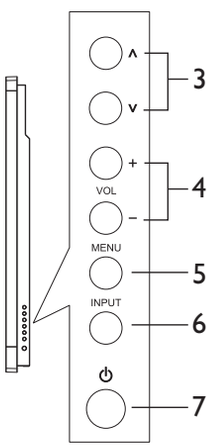

1. Power Indicator

2. Remote Sensor

3. ∧/∨

In the menu operations, these buttons serve as up/down buttons.

4. VOL+/-

Press the **VOL+** or **VOL-** button to increase or decrease the sound volume level;

In the menu operations, these buttons serve as right/left buttons.

5. MENU

Press this button to access the main menu screen.

6. INPUT

To access **Input Source** menu

7. POWER ⏻

Press this button to turn the unit ON from STANDBY mode.

Press it again to turn the set back to STANDBY mode.

Main Unit (back view)

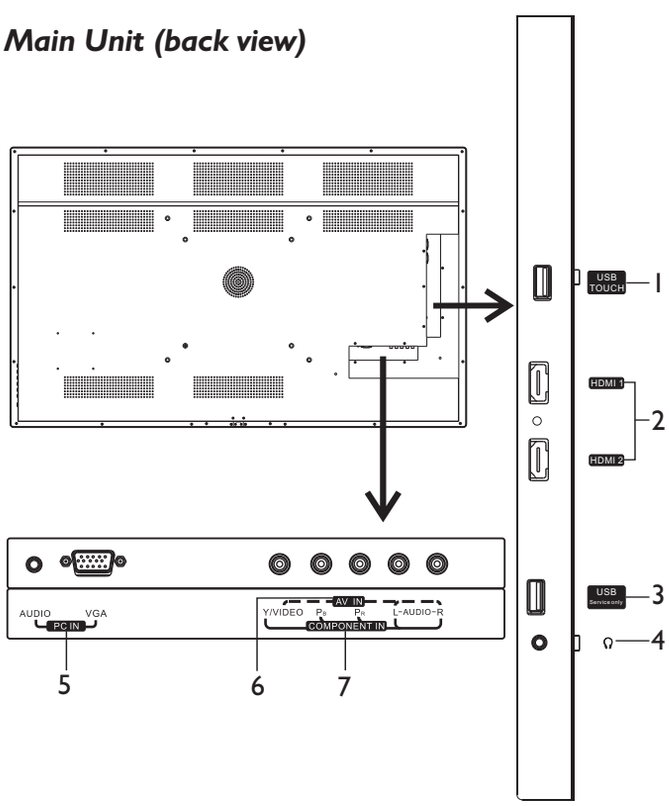

1. USB TOUCH port: Output the touch for external devices connected to PC or HDMI port which support touch system.

2. HDMI1/2: Connect an HDMI device to this jack.

3. USB Service port: Connect a USB device to this port. For service, software upgrades.

4. Headphone: Connect headphones to this jack.

5. PC IN VGA/AUDIO: Connect a computer to these jacks.

6. AV INPUT: Connect an AV device to these jacks.

Note: The **AV IN VIDEO** jack shares the same jack with the **COMPONENT IN Y** jack. The **AV IN** jacks share the audio jacks with the **COMPONENT IN** jacks.

7. COMPONENT IN: Connect a component video device to these jacks.

Remote Control

Remote control unit

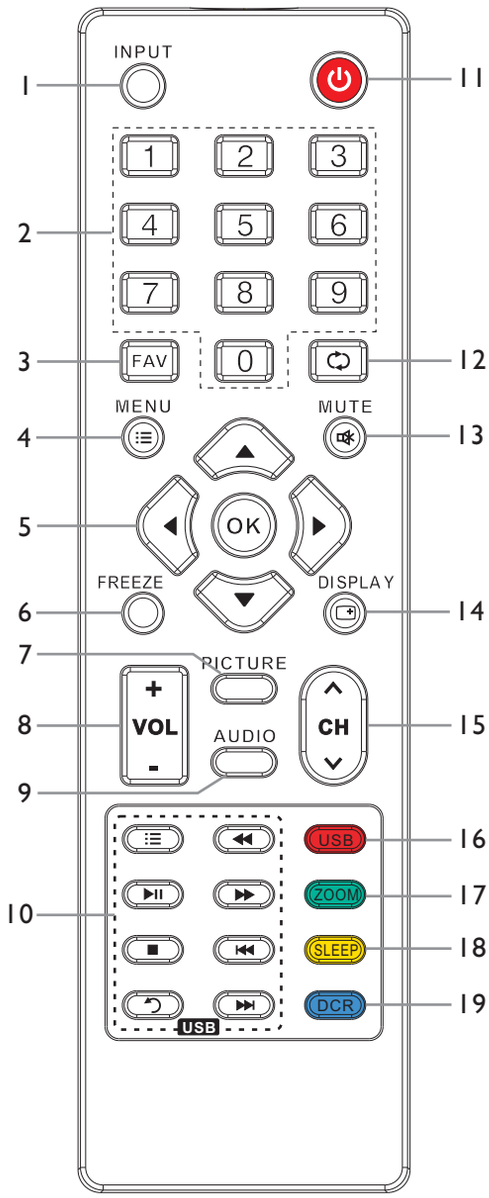

1. INPUT: Displays **Input Source** menu.

2. 0 – 9 number buttons

3. FAV: Press to open the Favorite List you set up.

4. MENU: Open the main menu or return to the previous menu.

5. ▲/▼/◀/▶/OK: Press the arrows to navigate through the menus or adjust an item. Press **OK** to confirm a selection or enter a sub-menu.

6. FREEZE: This button has no function.

7. PICTURE: Selects picture mode.

8. VOL+/VOL-: Increases or decreases the volume.

9. AUDIO: Selects sound mode (not available for headphone).

•10. USB control buttons: These button have no function.

11. POWER⏻ : Switches the display power on or to Standby.

12. ⟲ : This button has no function.

13. MUTE: Press to mute the sound. Press the button again to restore the sound.

14. DISPLAY: Displays the current program information.

15. CH^/CHv: This button has no function.

16. USB: Press to switch to **USB** mode.

17. ZOOM: Selects the picture aspect ratio.

18. SLEEP: Sets the sleep timer.

19. DCR: Switch the Dynamic Backlight on or off.

Note:

- This operation manual provides a description based on operating functions with the remote control.
- In different mode, some buttons may have different function.

Installing remote control batteries

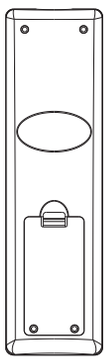

To install remote control batteries:

1 Open the battery cover.

2 Insert two AAA batteries into the battery compartment. Make sure that the + and – symbols on the batteries match the + and – symbols in the battery compartment.

3 Replace the cover.

Battery precautions:

Improper use of batteries can result in a leakage of chemicals and/or explosion. Be sure to follow the instructions below.

- Place batteries with their terminals corresponding to the (+) and (–) indications.
- Different types of batteries have different characteristics. Do not mix batteries of different types.
- Do not mix old and new batteries. Mixing old and new batteries can shorten the life of new batteries and/or cause old batteries to leak chemicals.
- Remove batteries as soon as they are non-operable. Chemicals that leak from batteries can cause a rash. If chemical leakage is found, wipe with a cloth.
- Dispose of batteries in a proper manner.
- If the remote control is not used for an extended period of time, remove the batteries.
- The batteries should not be exposed to excessive heat such as sunshine, fire or the like.

Aiming the remote control

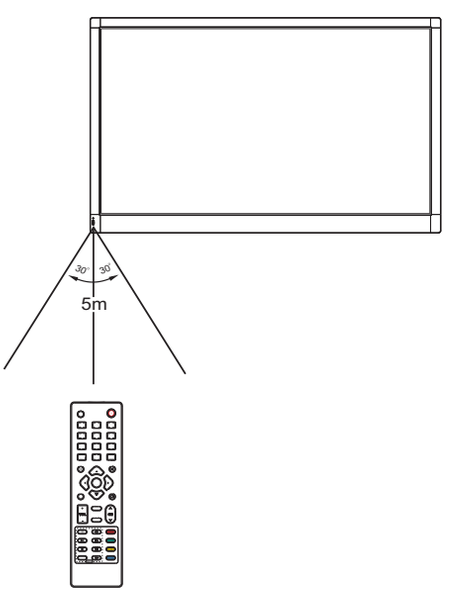

Use the remote control by pointing it towards the remote sensor on the front of your display. Objects between the remote control and the remote sensor may prevent proper operation.

Cautions regarding use of remote control

- Do not expose the remote control to shock. In addition, do not expose the remote control to liquids, and do not place in an area with high humidity.
- Do not install or place the remote control under direct sunlight. The heat may cause deformation of the unit.
- The remote control may not work properly if the remote sensor window of the main unit is under direct sunlight or strong lighting. In such a case, change the angle of the lighting or the display set, or operate the remote control closer to the remote sensor window.

Connections

Cautions Before Connecting

- When connecting an external device to the display, make sure that the display and the device is turned off.
- Check the plugs on the ends of the cables to make sure that they are the correct type before you try to plug them into the jacks on the display.
- Make sure that all plugs are securely inserted into the jacks. Loose connections can result in image or color problems.
- The illustration of the external device may be different depending on your model.
- Refer to the operating manual of the external device as well.

Power Connection

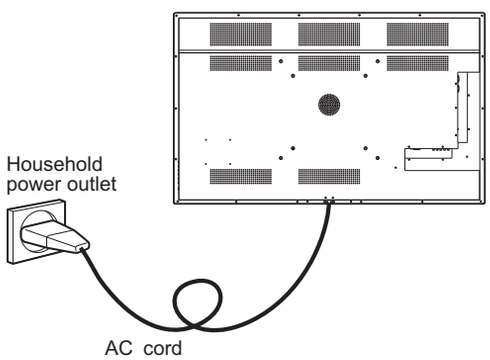

Connect the display's power cord to a power outlet.

Note:

- *This product should be operated only from the type of power source indicated on the marking label.*
- *Always unplug the AC cord from power outlet when not using for a long period of time.*
- *This illustration is for reference only. The AC plug may be different on different models.*

Connecting an HDMI device

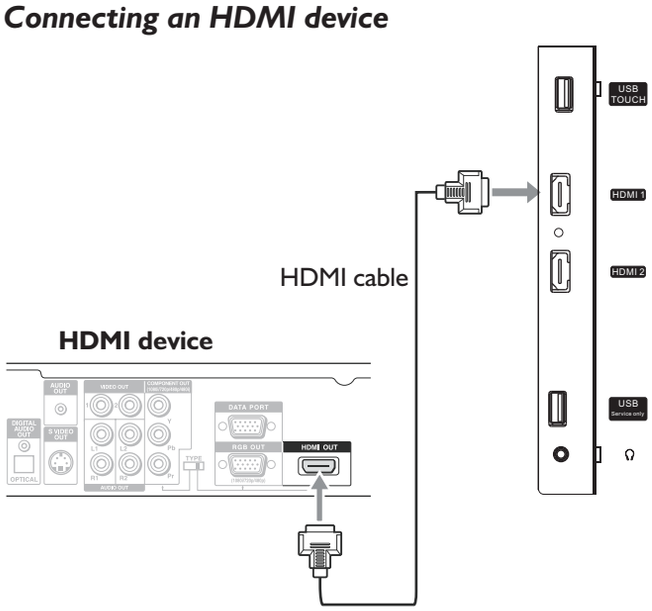

How to connect an HDMI device:

Connect the HDMI cable between the HDMI jack on the display and HDMI output jack on the device.

Note: If your device has an HDMI connection, we recommend you use that to get the best quality possible.

To play from the HDMI device:

1. Turn on your display and press the **INPUT** button. The **Input Source** menu will open.
2. Press ▲ or ▼ to select **HDMI 1** (or **HDMI 2** if HDMI2 jack is used) and press **OK** to confirm.
3. Turn on the HDMI device and set it to the correct mode. Refer to the instructions that came with the HDMI device.

If the external device has a DVI output only, use a DVI to HDMI adapter cable to connect to the HDMI terminal. Connect the audio cable to the PC IN AUDIO jack on the display.

Connecting Headphones

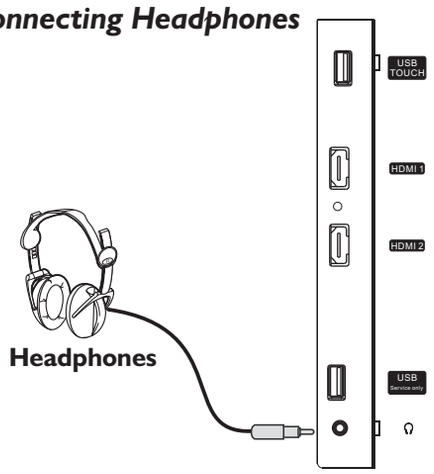

To connect headphones:

Insert the plug of the headphone into the display's Headphone jack.
When using headphones, adjust the headphone volume to avoid excessive volume levels, as hearing damage may result.

Connecting a camcorder or game console

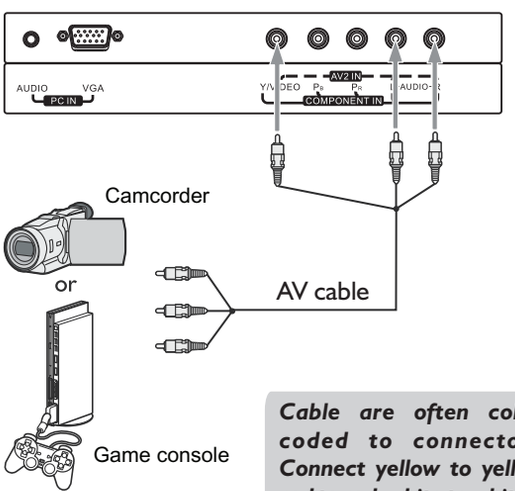

Cable are often color-coded to connectors. Connect yellow to yellow, red to red, white to white.

To connect a camcorder or game console:

Connect the Audio/Video cables between the Audio (L/R)/Video jacks on the display and the camcorder or game console.

Note: *If your game console has an HDMI connection, you will get better quality using the HDMI connection instead of the AV connection.*

To playback the camcorder or play the game console:

1. Turn on your display and press the **INPUT** button. The **Input Source** menu will open.
2. Press ▲ or ▼ to select **AV** and press **OK** to confirm.
3. Turn on the camcorder or game console, follow the instructions that came with the device to play from the camcorder or game console.

Note: The **AV IN VIDEO** jack shares the same jack with the **COMPONENT IN Y** jack. The **AV IN** jacks share the audio jacks with the **COMPONENT IN** jacks.

Connecting a component video device

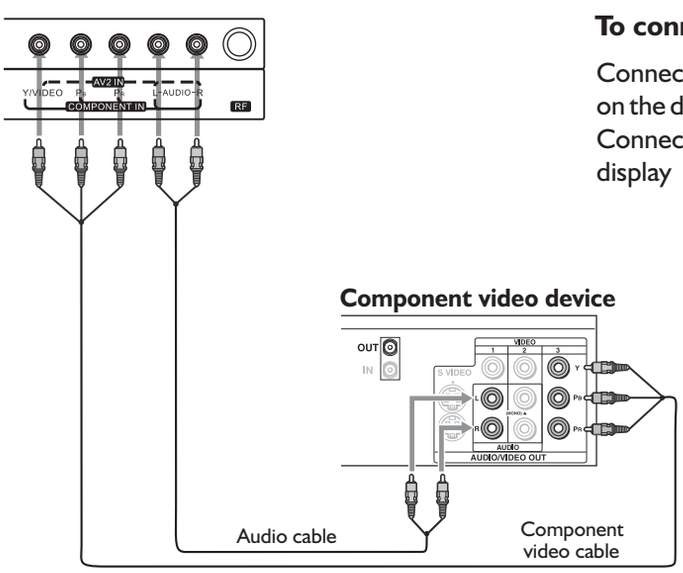

To connect a component video device:

Connect the Component Video cable between the Y, Pb, Pr input jacks on the display and Y, Pb, Pr(or Y, Cb, Cr) output jacks on the device .
Connect the Audio cable between the AUDIO input jacks on the display and AUDIO output jacks on the device.

To play from the component video device:

1. Turn on your display and press the **INPUT** button. The **Input Source** menu will open.
2. Press ▲ or ▼ to select **COMP.** and press **OK** to confirm.
3. Turn on your external device and set it to the correct mode. See the device's user guide for more information.

Component cables often have red, green, and blue color-coded video connectors and red and white audio connectors. Match the colors when making connections.

Connecting a computer

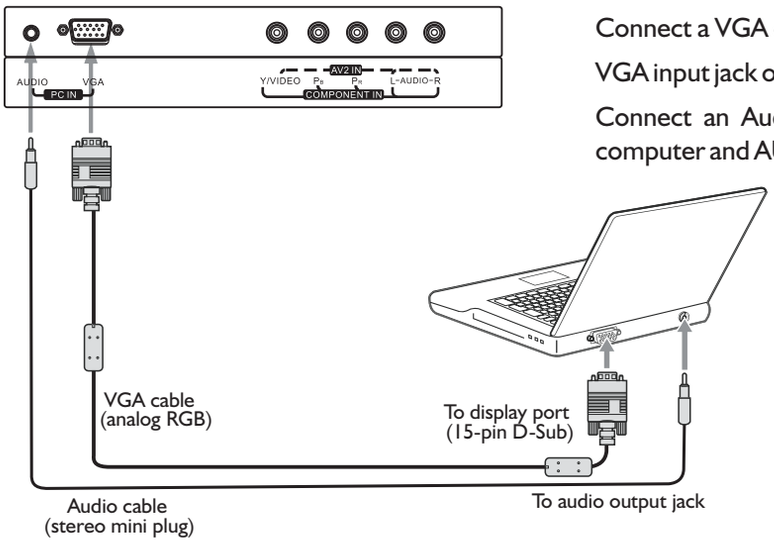

To connect a computer:

Connect a VGA cable between the VGA jack on the computer and the VGA input jack on the display.

Connect an Audio cable between the AUDIO output jack on the computer and AUDIO input jack on the display.

To play video from the computer:

1. Turn on your display and press the **INPUT** button. The **Input Source** menu will open.
2. Press ▲ or ▼ to select **VGA** and press **OK** to confirm.
3. Turn on your computer and adjust the display properties as required.

Connecting USB TOUCH

Connect **USB TOUCH** with USB cable to PC USB port.
Connect PC with VGA cable or HDMI cable. Please choose the proper method of connection based on your device.

Note: After installation of the driver, it can control the external computer by native touch control. (Only for PC、HDMI signal)

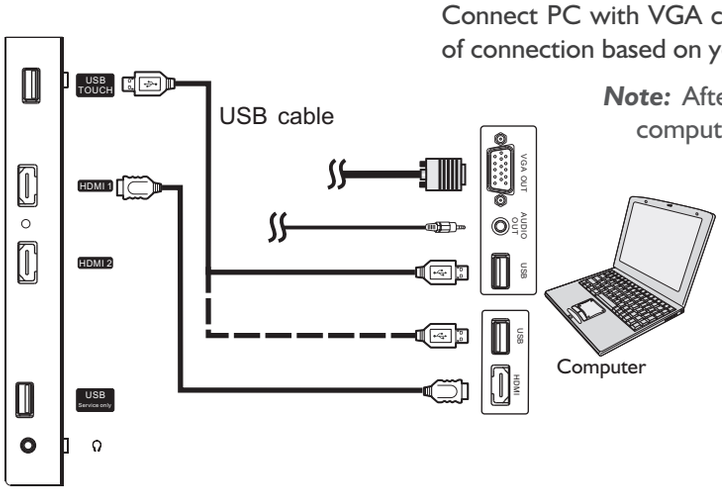

Basic Operations

Turning the display on or off

To turn the display on or off:

1 Plug the power cord into an AC power outlet.

2 Now the unit is in standby mode. Wait a few seconds until the power indicator lights up and press **POWER** ⏻ to turn on the display. (Be sure to wait a few seconds before pressing **POWER** ⏻ button. If you promptly press **POWER** ⏻ button then the display may not respond.

3 Press **POWER** ⏻ button again to turn off the display and put the display in standby mode.

To completely disconnect power, unplug the power cord.

Note: *If the display does not receive a broadcast signal for several minutes, the mpnitor will automatically turn off and go into standby mode.*

Selecting the input source

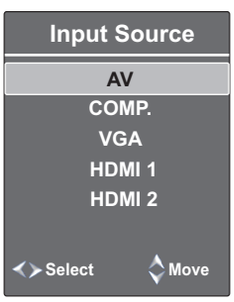

To select the input source:

1 Press the **INPUT** button.

2 Press ▼ or ▲ to select the input source. Options include:

AV — Watch the AV signal.

COMP. — Watch the signal from the COMPONENT input terminals.

•**VGA** — Watch the signal from the VGA input terminal.

•**HDMI 1** — Watch the signal from the HDMI1 input terminal.

•**HDMI 2** — Watch the signal from the HDMI2 input terminal.

3 Press **OK** to confirm the selection.

Adjusting the volume

To adjust the volume:

- Press **VOL+** or **VOL-** to increase or decrease the volume.
- Press the **MUTE** button to temporarily turn off the sound. To restore the sound, press the **VOL+** or **MUTE** button.

Note: The speaker volume and the headphone volume will be memorized separately.

Displaying program information

To display program information:

You can press the **DISPLAY** button to display current program information such as channel number, color/audio system, or video input source, etc. To clear the display, press this button again or wait a few seconds and it disappears automatically.

Freezing the Picture

To freeze the picture:

Press the **FREEZE** button to freeze the image on the screen (the video sources still run). Press this button again to reactive the image.

Note:

- ***If a fixed image is displayed on the screen for a long time, that fixed image may become imprinted on the screen and remain visible. Therefore do not freeze the picture for a long time.***
- ***In some modes, the FREEZE function can not work.***

On-screen menu overview

PICTURE menu

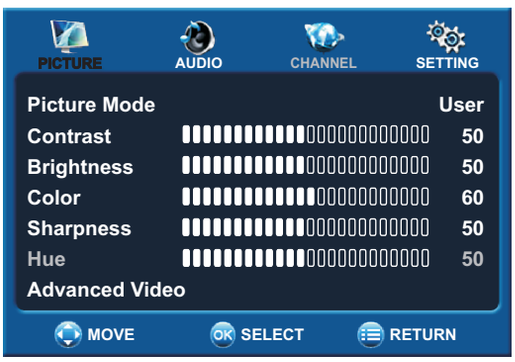

AUDIO menu

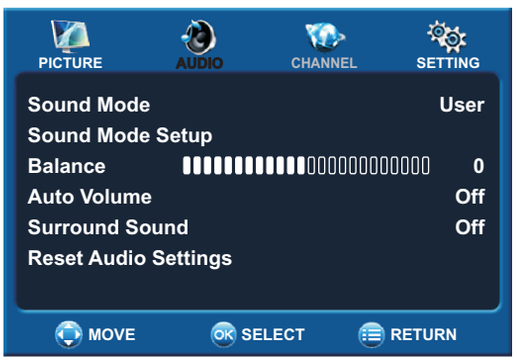

SETTING menu

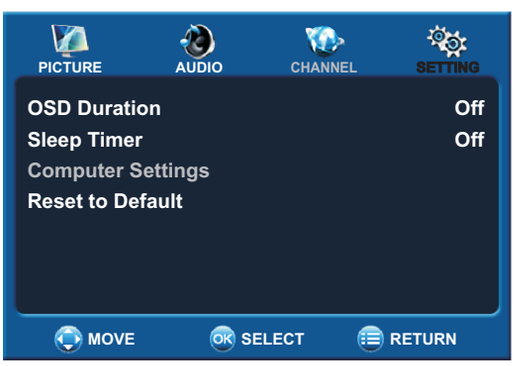

Using the OSD (on-screen display) menu

- With the power on, press **MENU** and the main menu screen displays.

– The screen will now display the **PICTURE** menu**.**

- Press ◀ or ▶ to select menu, press ▼ or **OK** to access the menu.
- Within the menu, press ▲ or ▼ to select items and press ▶ or **OK** to access and adjust the selected item. If a sub-menu exists, press ▶ or **OK** to open it and use ▲ ▼ ◀ ▶ and **OK** to operate.
- Continue pressing the **MENU** button to exit the menu screen. Or you can also wait for a few seconds and the on-screen menu will disappear from the screen automatically.

Note:

- *Some menu items may be different when the unit works in different mode.*
- *The illustrations and on-screen displays in this manual are for explanation purposes only (some are enlarged, others cropped) and may vary slightly from the actual ones.*

Picture Adjustment

Adjusting the Picture

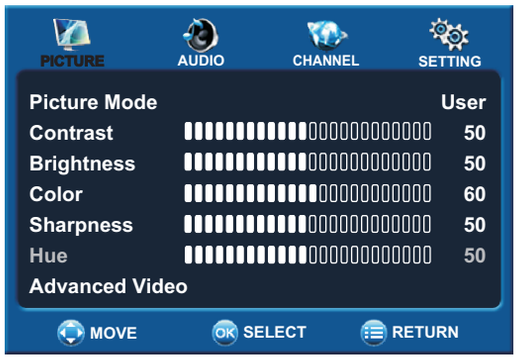

1 Press **MENU** and the main menu screen displays.

2 Press ◀ or ▶ to select the **PICTURE** menu and press ▼ or **OK** to access the menu.

3 Within the menu, press ▲ or ▼ to select items, press ◀ , ▶ or **OK** to access and press ▲ ▼ ◀ ▶ to adjust the selected item. If a sub-menu exists, press ▶ or **OK** to open it, then use ▲ ▼ ◀ ▶ **OK** to operate.

4 Continue pressing the **MENU** button to exit the menu screen.

Option	*Description*
Picture Mode	Selects a desired picture mode. You can select from **Vivid, Standard, Energy Saving, Cinema** and **User**.
	Vivid: Select for a bright and vivid picture.
	Standard: Select for a standard picture.
	Energy Saving: The backlight brightness is decreased.
	Cinema: Select for a finely detailed picture.
	User: The picture quality you set.
Note: *To quickly change the picture mode, continue pressing the* ***PICTURE*** *button on the remote control.*	
Contrast	Adjusts image contrast.
Brightness	Adjusts screen brightness for easier viewing of dark picture such as night scenes and black hair.
Color	Adjusts color saturation.
Sharpness	Adjusts image sharpness and displays a sharp image.
Hue	Adjusts color hue for image. (Only for NTSC system)
Advanced Video	Allows you to adjust Backlight, Color Temperature, Overscan, Aspect Ratio, Noise Reduction, Advanced Contrast, Reset Picture Settings. See [**Advanced Video Adjustment**] section for more information.

Advanced Video Adjustment

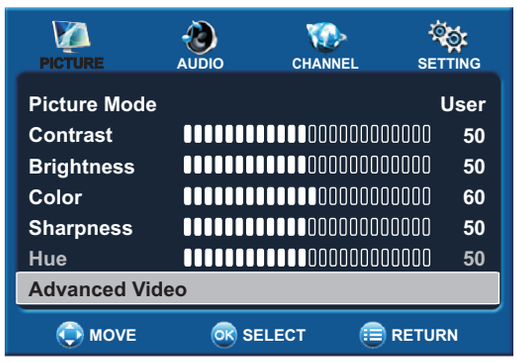

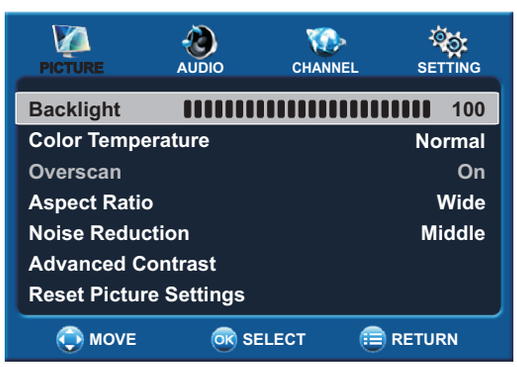

1 Navigate to the **PICTURE** menu, press ▼ or **OK** to access the menu.

2 Press ▲ or ▼ to select the **Advanced Video** and press ▶ or **OK** to access.

3 Within the menu, press ▲ or ▼ to select items and press ◀ , ▶ or **OK** to access and press ▲ ▼ ◀ ▶ to adjust the selected item.

4 Continue pressing the **MENU** button to exit the menu screen.

Option	*Description*
Backlight	Sets the overall brilliance of the screen.
Color Temperature	Selects one of three automatic color adjustments. Sets to **Warm** to enhance hotter colors such as red, or set to **Cool** to see less intense colors with more blue. You can select from **Cool, Normal** and **Warm**.
Overscan	Selects **On** to adjust the picture's reproduction rate when receiving HDMI signal. (Depending on versions, in some models this function is not available.)
Aspect Ratio	You can select the aspect ratio (display proportions) according to your video signal type or personal preference. You can select from **Normal, Zoom, Cinema** and **Wide.**
	Normal: Displays the image of the original proportions.
	Zoom: Enlarges the picture. The top and bottom portion of the picture may be cropped.
	Cinema: Stretches the picture at the edges while maintaining a good aspect ratio at the center of the screen.
	Wide: Displays a full-screen picture.
Note: *You can also press the* ***ZOOM*** *button on the remote control to select it.*	
Noise Reduction	Selects from **Low/Middle/High** to reduce noise in the picture, commonly called snow. Selects **Off** to turn off this function.
Advanced Contrast	**1.** Navigate to the **Advanced Video** submenu and press ▲ or ▼ to select **Advanced Contrast**, press ◀ , ▶ or **OK** to access. **2.** Press ▲ or ▼ to select **Dynamic Contrast** or **Dynamic Backlight** and use ◀ or ▶ to turn on or turn off the function. • **Dynamic Contrast:** Turns **On** to automatically adjust picture detail and brightness. • **Dynamic Backlight:** Turns **On** to enhance contrast ratio between light and dark areas of picture. (Once **Dynamic Backlight** is set to **On**, the **Backlight** item can not be adjusted.) ***Note:*** *You can also press* ***DCR*** *button to turn on or turn off the Dynamic Backlight directly.*
Reset Picture Settings	Reset all PICTURE settings to factory defaults.

Audio Adjustment

Adjusting the Sound

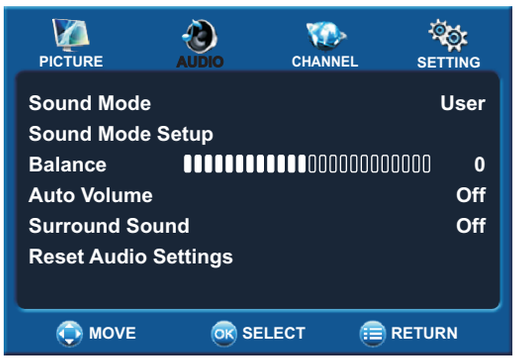

1 Press **MENU** and the main menu screen displays.

2 Press ◀ or ▶ to select the **AUDIO** menu and press ▼ or **OK** to access the menu.

3 Within the menu, press ▲ or ▼ to select items, press ◀ , ▶ or **OK** to access and press ▲ ▼ ◀ ▶ to adjust the selected item. If a sub-menu exists, press ▶ or **OK** to open it, then use ▲ ▼ ◀ ▶ **OK** to operate.

4 Continue pressing the **MENU** button to exit the menu screen.

Option	*Description*
Sound Mode	Selects a desired sound mode. You can select from **Standard**, **Music**, **Movie**, **Sports** and **User**.
	Standard: Select for normal programs.
	Music: Select for a music program.
	Movie: Select for a movie program.
	Sports: Select for a sports program.
	User: The sound quality you set.
Note: *You can also press the* ***AUDIO*** *button on the remote control to select it.*	
Sound Mode Setup	Adjusts the equalizer settings.
Balance	Adjusts volume balance (left and right volumes).
Auto Volume	Select **On** to equalize overall volume levels across all channels. Select **Off** to turn off the auto volume control.
Surround Sound	Select **On** to turn on the surround sound effect. The benefits of surround sound are enormous. You can be completely enveloped in sound, just as if you were at a concert hall or cinema. Select **Off** to turn the surround sound off.
Reset Audio Settings	Reset all AUDIO settings to factory defaults.

Adjusting Basic Settings & Adjusting Computer Settings

Adjusting basic options

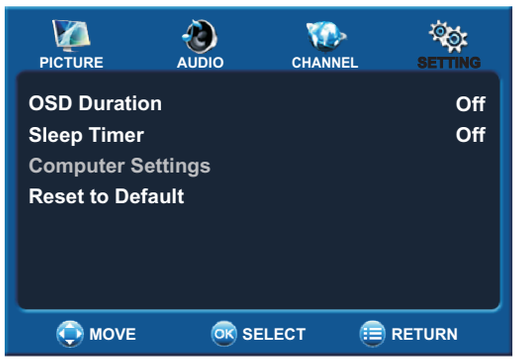

1 Press **MENU** and the main menu screen displays.

2 Press ◀ or ▶ to select the **SETTING** menu and press ▼ or **OK** to access the menu.

3 Within the menu, press ▲ or ▼ to select items, press ◀ , ▶ or **OK** to access and press ▲ ▼ ◀ ▶ to adjust the selected item. If a sub-menu exists, press ▶ or **OK** to open it and use ▲ ▼ ◀ ▶ **OK** to operate it.

4 Continue pressing the **MENU** button to exit the menu screen.

Option	*Description*
OSD Duration	Selects menu displaying time on the screen.
Sleep Timer	Selects the amount of time before your display will turn off automatically. To cancel sleep mode, select **Off**.
Note: *You can also press the* ***SLEEP*** *button on the remote control to select it.*	
Computer Settings (Only for VGA mode)	Allows you to adjust the computer settings, such as Horizontal Pos., Vertical Pos., Frequency, Phase, etc. through the menu. See [**Adjusting Computer Settings**] section for more information.
Reset to Default	Reset all settings to factory defaults.

Adjusting Computer Settings

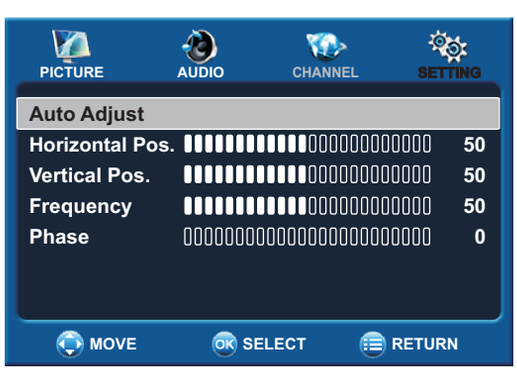

Before adjusting the image, make sure that you select the correct source (**VGA**).

1 Navigate to the **SETTING** menu and press ▼ or **OK** to access the menu.

2 Press ▲ or ▼ to select **Computer Settings** and press ▶ or **OK** to access.

3 Within the menu, press ▲ or ▼ to select items and press ◀ , ▶ or **OK** to access and press ▲ ▼ ◀ ▶ to adjust the selected item.

4 Continue pressing the **MENU** button to exit the menu screen.

Option	*Description*
Auto Adjust	Selects and activates to start auto adjustment. The image settings, such as position and phase will be automatically adjusted.
Horizontal Pos.	Moves the image on the screen left or right.
Vertical Pos.	Moves the image on the screen up or down.
Frequency	Adjusts the sample frequency.
Phase	Improves the focusing of a stable image.

Troubleshooting

If, after reading these operating instructions, you have additional questions related to the use of your television, please call the local services center in your area.
Before calling the service center, please check the symptoms and follow suggested solutions.

Remote Control

Problem	*Possible Solutions*
Remote control does not operate	• The batteries could be weak. Replace the batteries. • Check the orientation of the batteries. • Make sure the power cord is plugged in.

Video and Audio

Problem	*Possible Solutions*
No picture (screen not lit), No sound	• Make sure the power cord is plugged in. • Press POWER on the display or on the remote control.
Dark, poor or no picture (Screen lit), good sound	• Select a proper picture mode. • Adjust the brightness in the video setting.
No color/dark picture/color is not correct	• Adjust the color saturation in the video setting.
Dotted lines or stripes	• Move the display away from noise sources such as cars, neon signs, or hair dryers.
Good picture, no sound	• The sound may be muted. Press the MUTE button to restore the sound.
Audio noise	• Communication problems may occur if infrared communication equipment (e.g., infrared cordless headphones) is used near the display. Move the infrared communication equipment away from the display until the noise is eliminated.

General

Problem	*Possible Solutions*
Some items can't be accessed	• If a setting option appears in gray, this indicates that the settings option is unavailable in current input mode.
Control buttons do not operate	• Disconnect the power cord and wait for a few seconds. Then re-plug the power cord and turn on the unit again.

Note: *If your problem is not solved, turn your unit off and then on again.*

Cautions: *Never attempt to repair a defective display yourself.*

Specifications

Type:	LED touch display
Panel:	55”
Power Supply:	~120 V, 60 Hz
Rating:	1.7A
Dimensions(WxHxD):	1289.8×792×64 mm
Weight:	36.3 kg
Terminals:	AV in (AV shared with COMPONENT IN) COMPONENT in (1) PC in (1) HDMI in (2) Headphone (1) USB Service port (1) USB Touch port (1)

Note:

1. Design and specifications are subject to change without notice.

2. Weight and dimensions shown are approximate.

3. Specifications and external appearance may be changed for the sake of improvement.

PRINTED ON
RECYCLED PAPER

FCC STATEMENT

1. This device complies with Part 15 of the FCC Rules. Operation is subject to the following two conditions:

(1) This device may not cause harmful interference, and

(2) This device must accept any interference received, including interference that may cause undesired operation.

2. Changes or modifications not expressly approved by the party responsible for compliance could void the user's authority to operate the equipment.

This equipment has been tested and found to comply with the limits for a Class B digital device, pursuant to part 15 of the FCC Rules. These limits are designed to provide reasonable protection against harmful interference in a residential installation. This equipment generates, uses and can radiate radio frequency energy and, if not installed and used in accordance with the instructions, may cause harmful interference to radio communications. However, there is no guarantee that interference will not occur in a particular installation. If this equipment does cause harmful interference to radio or television reception, which can be determined by turning the equipment off and on, the user is encouraged to try to correct the interference by one or more of the following measures:

—Reorient or relocate the receiving antenna.

—Increase the separation between the equipment and receiver.

—Connect the equipment into an outlet on a circuit different from that to which the receiver is connected.

—Consult the dealer or an experienced radio/ TV technician for help.