Video Mate Wireless Speaker & Phone Holder

User's Guide for Model ISB243B v3070-01

Features

- Bluetooth v5.0
- Portable mini speaker
- Removable phone stand
- Built-in microphone
- Handsfree calling
- Playtime: up to 10 hours

Includes

- Micro-USB to USB cable
- User manual

Controls and Functions

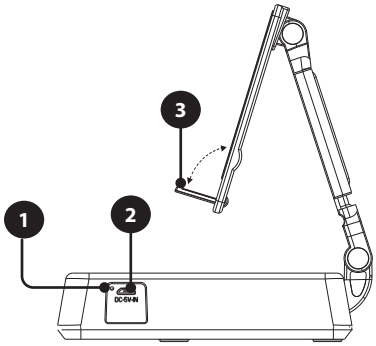

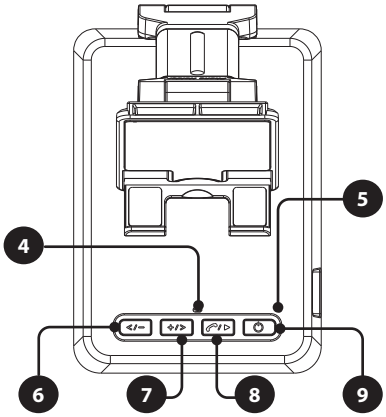

1. **Charging Indicator**
2. **DC Power input**
3. **Phone Holder**
4. **Microphone**
5. **LED Indicator:** Indicates Bluetooth connection status.
6. **Vol -/Previous:** Press to decrease the volume. Press and hold down to return to the previous track.
7. **Vol +/Next:** Press to increase the volume. Press and hold down to skip to the next track.
8. **Play/Pause/Answer/Pair:** Press to pause or resume playback. Press to answer and hang up phone calls with handsfree speakerphone. Press twice to disconnect and connect Bluetooth.
9. **Power on/off:** Press and hold down to power the Bluetooth speaker on/off.

Battery Power

Charge fully before use. The charge time is approximately 4 hours.

When the unit is charging, the **Charging Indicator** will display a solid red light. When charging is complete, the indicator will turn off.

Using a **Micro-USB to USB** cable (included), connect the DC power input on the speaker to the USB port of a powered-on computer or USB power adaptor (not included) to charge the speaker.

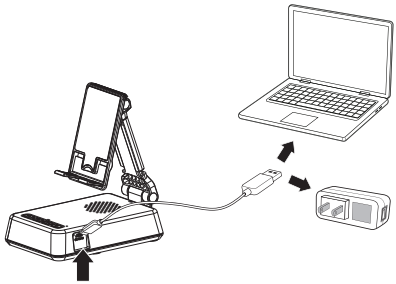

Positioning the Phone Stand

Note: This mobile device stand is only suitable for smartphone devices under 6.8". It cannot support tablets.

Raise or lower your phone by sliding the arm of the phone stand up or down. Adjust the angle using the hinges at the base or at the top of the phone holder.

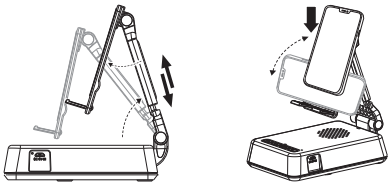

Removing the Phone Stand

Detach the phone stand from the speaker by gripping the base of the phone stand. Pull directly out. Avoid yanking or pulling at an angle to prevent damage to the stand or speaker.

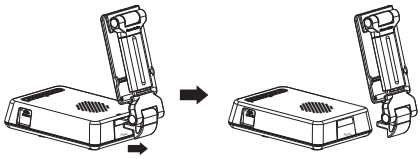

Bluetooth Wireless

Pairing & Playing Audio

1. When powered on, the speaker will enter Bluetooth Mode automatically.
2. Using the Bluetooth setting on your device, search for new devices and select **ISB243**. *Refer to the user's manual for your specific device for instructions on pairing and connecting Bluetooth devices.*
3. When successfully paired, a voice prompt will announce the connection and the **LED Indicator** will display a solid blue light.
4. Use the controls on the connected device to select and begin playing audio. Use the controls on the speaker or the connected device to play, pause, and adjust volume.

Note: The speaker will automatically connect to the last paired device when powering on. If your device becomes unpaired or it is unable to connect, press the **Play/Pause/Answer/Pair** button two times to enter pairing mode. A voice prompt will announce "Bluetooth is connecting" and the **LED Indicator** will start flashing blue. Start from step two to connect to your device.

Phone Calls

This speaker supports handsfree phone calls in Bluetooth mode. When connected to your phone, press the **Play/Pause/Answer/Pair** button to answer a phone call.

Voice Prompts

This speaker offers voice prompt assistance. To turn voice prompts on/off, press and hold down the **Vol +/Next** and **Vol -/Previous** buttons at the same time for five seconds.

Customer Support

Customer Service: *1-888-999-4215* **| Email Support:** *prodinfo@dpiinc.com* **| Email Parts:** *partsinfo@dpiinc.com*

For Warranty Information and the most up-to-date version of this User's Guide, go to **www.iLiveElectronics.com**

To download this User's Guide in English, Spanish, or French, or to get answers to frequently asked questions, visit the support section at: **www.iLiveElectronics.com**

Para descargar este Manual del Usuario en inglés, español y francés, o para obtener respuestas a preguntas frecuentes, visite la sección de apoyo en: **www.iLiveElectronics.com**

Pour télécharger ce guide de l'utilisateur en anglais, espagnol ou français, ou pour obtenir des réponses à des questions fréquemment posées, consultez la rubrique d'assistance sur: **www.iLiveElectronics.com**

Copyright © 2023 Digital Products International (DPI, Inc.) All other trademarks appearing herein are the property of their respective owners. Specifications are subject to change without notice.

Safety Warnings.

- WARNING: To prevent fire or shock hazards, do not expose this unit to rain or moisture.
- WARNING : Where the mains plug or appliance coupler is used as the disconnect device, such disconnect device shall remain readily operable.
- Do not place foreign materials, such as metal objects, magnets, or the like, between a mobile device and the charging surface. This may interrupt charging and may cause damage from overheating.
- Only use with the included power supply.

WARNING: This product can expose you to chemicals including lead, which is known to the State of California to cause cancer and birth defects or other reproductive harm. For more information go to www.P65Warnings.ca.gov. **This product meets and complies with required Federal product guidelines.**

FCC WARNING

This device complies with part 15 of the FCC Rules. Operation is subject to the following two conditions: (1) this device may not cause harmful interference, and (2) this device must accept any interference received, including interference that may cause undesired operation.
Any changes or modifications not expressly approved by the party responsible for compliance could void the user's authority to operate the equipment.
NOTE: This equipment has been tested and found to comply with the limits for a Class B digital device, pursuant to Part 15 of the FCC Rules. These limits are designed to provide reasonable protection against harmful interference in a residential installation. This equipment generates, uses and can radiate radio frequency energy and, if not installed and used in accordance with the instructions, may cause harmful interference to radio communications. However, there is no guarantee that interference will not occur in a particular installation. If this equipment does cause harmful interference to radio or television reception which can be determined by turning the equipment off and on, the user is encouraged to try to correct the interference by one or more of the following measures:

- Reorient or relocate the receiving antenna.
- Increase the separation between the equipment and receiver.
- Connect the equipment into an outlet on a circuit different from that to which the receiver is connected.
- Consult the dealer or an experienced radio/TV technician for help.
- To maintain compliance with FCC's RF Exposure guidelines, This equipment should be installed and operated with minimum 20cm distance between the radiator and your body: Use only the supplied antenna.