CFR 47 FCC PART 2
CFR 47 FCC PART 22 H
CFR 47 FCC PART 24 E
CFR 47 FCC PART 27
CFR 47 FCC PART 90S

TEST REPORT

For

5G Smart Phone

MODEL NUMBER: S6702X

REPORT NUMBER: 4791041023-1-RF-7

ISSUE DATE: Jan. 12, 2024

FCC ID:2ADINS6702X

Prepared for

Sun Cupid Technology (HK) Ltd.
16/F, CEO Tower, 77 Wing Hong St, Cheung Sha Wan, Kowloon Hong Kong

Prepared by

UL Verification Services (Guangzhou) Co., Ltd, Song Shan Lake Branch
Building 10, Innovation Technology Park, No. 1, Li Bin Road, Song Shan Lake Hi-Tech Development Zone Dongguan, 523808, People's Republic of China

Tel: +86 769 22038881
Fax: +86 769 33244054
Website: www.ul.com

The results reported herein have been performed in accordance with the laboratory's terms of accreditation. This report shall not be reproduced except in full without the written approval of the Laboratory. The results in this report apply to the test sample(s) mentioned above at the time of the testing period only and are not to be used to indicate applicability to other similar products.

Revision History

Rev.	Issue Date	Revisions	Revised By
V0	Jan. 12, 2024	Initial Issue	\

Note:
1.This test report is only published to and used by the applicant, and it is not for evidence purpose in China.
2. The measurement result for the sample received is <Pass> according to < CFR 47 FCC PART 22 H >< CFR 47 FCC PART 24 E>< CFR 47 FCC PART 27 >< CFR 47 FCC PART 90S > when < Simple Acceptance > decision rule is applied.

This report shall not be reproduced except in full, without the written approval of UL Verification Services (Guangzhou) Co., Ltd, Song Shan Lake Branch

TABLE OF CONTENTS

1. ATTESTATION OF TEST RESULTS 5

2. TEST METHODOLOGY 7

3. FACILITIES AND ACCREDITATION 7

4. CALIBRATION AND UNCERTAINTY 8

4.1. MEASURING INSTRUMENT CALIBRATION 8

4.2. MEASUREMENT UNCERTAINTY 8

5. EQUIPMENT UNDER TEST 9

5.1. DESCRIPTION OF EUT 9

5.2. TEST CHANNEL CONFIGURATION 9

5.3. MAXIMUM AVERAGE OUTPUT POWER 14

5.4. WORST-CASE CONFIGURATION AND MODE 20

5.5. DESCRIPTION OF AVAILABLE ANTENNAS 21

5.6. DESCRIPTION OF TEST SETUP 23

6. MEASURING INSTRUMENT AND SOFTWARE USED 24

7. ANTENNA TERMINAL TEST RESULTS 25

7.1. EFFECTIVE (ISOTROPIC) RADIATED POWER OF TRANSMITTER 25

7.2. PEAK TO AVERAGE RADIO 27

7.3. OCCUPIED BANDWIDTH 28

7.4. BAND EDGE EMISSIONS 29

7.5. SPURIOUS EMISSION AT ANTENNA TERMINAL 31

7.6. FREQUENCY STABILITY 33

8. APPENDIX 34

8.1. Appendix A: Effective (Isotropic) Radiated Power Output Data 34

8.1.1. LTE Band 2 34
8.1.1. LTE Band 4 37
8.1.2. LTE Band 5 40
8.1.3. LTE Band 7 42
8.1.4. LTE Band 12 44
8.1.5. LTE Band 13 46
8.1.6. LTE Band 25 47
8.1.7. LTE Band 26 (814-824 MHz) 50
8.1.8. LTE Band 26 (824-849 MHz) 52
8.1.9. LTE Band 41 54
8.1.10. LTE Band 66 56

This report shall not be reproduced except in full, without the written approval of UL Verification Services (Guangzhou) Co., Ltd, Song Shan Lake Branch

8.1.11. LTE Band 71 59

8.2. Appendix B: Peak-to-Average Ratio(CCDF)....61
8.2.1. Test Result 61
8.2.2. Test Graphs....65

8.3. Appendix C: 26dB Bandwidth and Occupied Bandwidth 92
8.3.1. Test Result 92
8.3.2. Test Graphs....95

8.4. Appendix D: Band Edge....114
8.4.1. Test Result 114
8.4.2. Test Graphs....126

8.5. Appendix E: Conducted Spurious Emission 195
8.5.1. Test Result 195
8.5.2. Test Graphs....223

8.6. Appendix F: Frequency Stability....390
8.6.1. Test Result 390

9. RADIATED SPURIOUS EMISSIONS 413

9.1.1. LTE Band 2....416
9.1.2. LTE Band 4....418
9.1.3. LTE Band 5....420
9.1.4. LTE Band 7....422
9.1.5. LTE Band 12....424
9.1.6. LTE Band 13....426
9.1.7. LTE Band 25....427
9.1.8. LTE Band 26 (814 ~ 824 MHz) 429
9.1.9. LTE Band 26 (824 ~ 849 MHz) 430
9.1.10. LTE Band 41 432
9.1.11. LTE Band 66 434
9.1.12. LTE Band 71 436

This report shall not be reproduced except in full, without the written approval of UL Verification Services (Guangzhou) Co., Ltd, Song Shan Lake Branch

1. ATTESTATION OF TEST RESULTS

Applicant Information

Company Name:	Sun Cupid Technology (HK) Ltd.
Address:	16/F, CEO Tower, 77 Wing Hong St, Cheung Sha Wan, Kowloon Hong Kong

Manufacturer Information

Company Name:	Sun Cupid Technology (HK) Ltd.
Address:	16/F, CEO Tower, 77 Wing Hong St, Cheung Sha Wan, Kowloon Hong Kong

EUT Information

EUT Name:	5G Smart Phone
Model:	S6702X
Series Model:	B30 Pro, NUU B30 Pro
Brand:	NUU
Sample Received Date:	October 26, 2023
Sample Status:	Normal
Sample ID:	6616020
Date of Tested:	Oct. 26, 2023 to Jan. 5, 2024

APPLICABLE STANDARDS	
STANDARD	**TEST RESULTS**
CFR 47 FCC PART 22 H	PASS
CFR 47 FCC PART 24 E	PASS
CFR 47 FCC PART 27	PASS
CFR 47 FCC PART 90S	PASS

This report shall not be reproduced except in full, without the written approval of UL Verification Services (Guangzhou) Co., Ltd, Song Shan Lake Branch

Prepared By:

James Qin
Project Engineer

Checked By:

Denny Huang
Senior Project Engineer

Approved By:

Stephen Guo
Operations Manager

This report shall not be reproduced except in full, without the written approval of UL Verification Services (Guangzhou) Co., Ltd, Song Shan Lake Branch

2. TEST METHODOLOGY

The tests documented in this report were performed in accordance with ANSI C63.26-2015, 971168 D01 Power Meas License Digital Systems v03r01, 971168 D02 Misc Rev Approv License Devices v02r01, 412172 D01 v01r01 Determining ERP and EIRP, CFR 47 FCC Part 2, Part 22 H, Part 24 E, Part 27, Part 90S.

3. FACILITIES AND ACCREDITATION

Accreditation Certificate	**A2LA (Certificate No.: 4102.01)** UL Verification Services (Guangzhou) Co., Ltd. Song Shan Lake Branch. has been assessed and proved to be in compliance with A2LA. **FCC (FCC Designation No.: CN1187)** UL Verification Services (Guangzhou) Co., Ltd. Song Shan Lake Branch. Has been recognized to perform compliance testing on equipment subject to the Commission's Delcaration of Conformity (DoC) and Certification rules **ISED (Company No.: 21320)** UL Verification Services (Guangzhou) Co., Ltd. Song Shan Lake Branch. has been registered and fully described in a report filed with ISED. The Company Number is 21320 and the test lab Conformity Assessment Body Identifier (CABID) is CN0046. **VCCI (Registration No.: G-20192, C-20153, T-20155 and R-20202)** UL Verification Services (Guangzhou) Co., Ltd. Song Shan Lake Branch. has been assessed and proved to be in compliance with VCCI, the Membership No. is 3793. Facility Name: Chamber D, the VCCI registration No. is G-20192 and R-20202. Shielding Room B, the VCCI registration No. is C-20153 and T-20155.

Note 1: All tests measurement facilities use to collect the measurement data are located at Building 10, Innovation Technology Park, Song Shan Lake Hi tech Development Zone, Dongguan, 523808, China

Note 2: The test anechoic chamber in UL Verification Services (Guangzhou) Co., Ltd. Song Shan Lake Branch had been calibrated and compared to the open field sites and the test anechoic chamber is shown to be equivalent to or worst case from the open field site.

Note 3: For below 30 MHz, lab had performed measurements at test anechoic chamber and comparing to measurements obtained on an open field site. And these measurements below 30 MHz had been correlated to measurements performed on an OFS.

This report shall not be reproduced except in full, without the written approval of UL Verification Services (Guangzhou) Co., Ltd, Song Shan Lake Branch

4. CALIBRATION AND UNCERTAINTY

4.1. MEASURING INSTRUMENT CALIBRATION

The measuring equipment utilized to perform the tests documented in this report has been calibrated in accordance with the manufacturer's recommendations and is traceable to recognize national standards.

4.2. MEASUREMENT UNCERTAINTY

Where relevant, the following measurement uncertainty levels have been estimated for tests performed on the apparatus:

Test Item	Uncertainty
Conduction emission	3.62 dB
Radiated Emission (Included Fundamental Emission) (9 kHz ~ 30 MHz)	2.2 dB
Radiated Emission (Included Fundamental Emission) (30 MHz ~ 1 GHz)	4.00 dB
Radiated Emission (Included Fundamental Emission) (1 GHz to 40 GHz)	5.78 dB (1 GHz-18 GHz)
	5.23dB (18 GHz-26 GHz)
	5.64 dB (26 GHz-40 GHz)
Bandwidth	1.1 %
Note: This uncertainty represents an expanded uncertainty expressed at approximately the 95 % confidence level using a coverage factor of k=2.	

This report shall not be reproduced except in full, without the written approval of UL Verification Services (Guangzhou) Co., Ltd, Song Shan Lake Branch

5. EQUIPMENT UNDER TEST

5.1. DESCRIPTION OF EUT

EUT Name:	5G Smart Phone
Model:	S6702X
Series Model:	B30 Pro, NUU B30 Pro
Model Difference:	B30 Pro, NUU B30 Pro have the same technical construction including circuit diagram, PCB Layout, components and component layout, all electrical construction and mechanical construction with S6702X. The difference lies only the model number. all these changes do not degrade the unwanted emissions of the certified product.

5.2. TEST CHANNEL CONFIGURATION

Band	Test Frequency ID	Bandwidth [MHz]	NUL	Frequency of Uplink [MHz]	NDL	Frequency of Downlink [MHz]
Band 2	Low Range	1.4	18607	1850.7	607	1930.7
		3	18615	1851.5	615	1931.5
		5	18625	1852.5	625	1932.5
		10	18650	1855	650	1935
		15	18675	1857.5	675	1937.5
		20	18700	1860	700	1940
	Mid Range	1.4/3/5/10/15/20	18900	1880	900	1960
	High Range	1.4	19193	1909.3	1193	1989.3
		3	19185	1908.5	1185	1988.5
		5	19175	1907.5	1175	1987.5
		10	19150	1905	1150	1985
		15	19125	1902.5	1125	1982.5
		20	19100	1900	1100	1980

Band	Test Frequency ID	Bandwidth [MHz]	NUL	Frequency of Uplink [MHz]	NDL	Frequency of Downlink [MHz]
Band 4	Low Range	1.4	19957	1710.7	1957	2110.7
		3	19965	1711.5	1965	2111.5
		5	19975	1712.5	1975	2112.5
		10	20000	1715	2000	2115
		15	20025	1717.5	2025	2117.5
		20	20050	1720	2050	2120
	Mid Range	1.4/3/5/10/15/20	20175	1732.5	2175	2132.5
	High Range	1.4	20393	1754.3	2393	2154.3
		3	20385	1753.5	2385	2153.5
		5	20375	1752.5	2375	2152.5

This report shall not be reproduced except in full, without the written approval of UL Verification Services (Guangzhou) Co., Ltd, Song Shan Lake Branch

		10	20350	1750	2350	2150
		15	20325	1747.5	2325	2147.5
		20	20300	1745	2300	2145

Band	Test Frequency ID	Bandwidth [MHz]	NUL	Frequency of Uplink [MHz]	NDL	Frequency of Downlink [MHz]
Band 5	Low Range	1.4	20407	824.7	2407	869.7
		3	20415	825.5	2415	870.5
		5	20425	826.5	2425	871.5
		10	20450	829	2450	874
	Mid Range	1.4/3/5/10	20525	836.5	2525	881.5
	High Range	1.4	20643	848.3	2643	893.3
		3	20635	847.5	2635	892.5
		5	20625	846.5	2625	891.5
		10	20600	844	2600	889

Band	Test Frequency ID	Bandwidth [MHz]	NUL	Frequency of Uplink [MHz]	NDL	Frequency of Downlink [MHz]
Band 7	Low Range	5	20775	2502.5	2775	2622.5
		10	20800	2505	2800	2625
		15	20825	2507.5	2825	2627.5
		20	20850	2510	2850	2630
	Mid Range	5/10/15/20	21100	2535	3100	2655
	High Range	5	21425	2567.5	3425	2687.5
		10	21400	2565	3400	2685
		15	21375	2562.5	3375	2682.5
		20	21350	2560	3350	2680

Band	Test Frequency ID	Bandwidth [MHz]	NUL	Frequency of Uplink [MHz]	NDL	Frequency of Downlink [MHz]
Band 12	Low Range	1.4	23017	699.7	5017	729.7
		3	23025	700.5	5025	730.5
		5	23035	701.5	5035	731.5
		10	23060	704	5060	734
	Mid Range	1.4/3/5 /10	23095	707.5	5095	737.5
	High Range	1.4	23173	715.3	5173	745.3
		3	23165	714.5	5165	744.5
		5	23155	713.5	5155	743.5
		10	23130	711	5130	741

This report shall not be reproduced except in full, without the written approval of UL Verification Services (Guangzhou) Co., Ltd, Song Shan Lake Branch

Band	Test Frequency ID	Bandwidth [MHz]	NUL	Frequency of Uplink [MHz]	NDL	Frequency of Downlink [MHz]
Band 13	Low Range	5	23205	779.5	5205	748.5
		10	23230	782	5230	751
	Mid Range	5/10	23230	782	5230	751
	High Range	5	23255	784.5	5255	753.5
		10	23230	782	5230	751

Band	Test Frequency ID	Bandwidth [MHz]	NUL	Frequency of Uplink [MHz]	NDL	Frequency of Downlink [MHz]
Band 25	Low Range	1.4	26047	1850.7	8047	1930.7
		3	26055	1851.5	8055	1931.5
		5	26065	1852.5	8065	1932.5
		10	26090	1855	8090	1935
		15	26115	1857.5	8115	1937.5
		20	26140	1860	8140	1940
	Mid Range	1.4/3/5/10/15/20	26365	1882,5	8365	1962.5
	High Range	1.4	26683	1914.3	8683	1994.3
		3	26675	1913.5	8675	1993.5
		5	26665	1912.5	8665	1992.5
		10	26640	1910	8640	1990
		15	26615	1907.5	8615	1987.5
		20	26590	1905	8590	1985

Band	Test Frequency ID	Bandwidth [MHz]	NUL	Frequency of Uplink [MHz]	NDL	Frequency of Downlink [MHz]
Band 26	Low Range	1.4	26697	814.7	8697	859.7
		3	26705	815.5	8705	860.5
		5	26715	816.5	8715	861.5
		10	26740	819	8740	864
		15	26765	821.5	8765	866.5
	Mid Range	1.4/3/5/10/15	26865	831.5	8865	876.5
	High Range	1.4	27033	848.3	9033	893.3
		3	27025	847.5	9025	892.5
		5	27015	846.5	9015	891.5
		10	26990	844	8990	889
		15	26965	841.5	8965	886.5

This report shall not be reproduced except in full, without the written approval of UL Verification Services (Guangzhou) Co., Ltd, Song Shan Lake Branch

Band	Test Frequency ID	Bandwidth [MHz]	EARFCN	Frequency (UL and DL) [MHz]
Band 41	Low Range	5	39675	2498.5
		10	39700	2501
		15	39725	2503.5
		20	39750	2506
	Mid Range	5/10/15/20	40620	2593
	High Range	5	41565	2687.5
		10	41540	2685
		15	41515	2682.5
		20	41490	2680

Band	Test Frequency ID	Bandwidth [MHz]	NUL	Frequency of Uplink [MHz]	NDL	Frequency of Downlink [MHz]
Band 66	Low Range	1.4	131979	1710.7	66443	2110.7
		3	131987	1711.5	66451	2111.5
		5	131997	1712.5	66461	2112.5
		10	132022	1715	66486	2115
		15	132047	1717.5	66511	2117.5
		20	132072	1720	66536	2120
	Mid Range Tx[1]	1.4/3/5/10/15/20	132322	1745	66786	2145
	Mid Range	1.4/3/5/10/15/20	132422	1755	66886	2155
	Paired High Range[2]	1.4	132665	1779.3	67129	2179.3
		3	132657	1778.5	67121	2178.5
		5	132647	1777.5	67111	2177.5
		10	132622	1775	67086	2175
		15	132597	1772.5	67061	2172.5
		20	132572	1770	67036	2170
	High Range[3]	1.4	NA	NA	67329	2199.3
		3	NA	NA	67321	2198.5
		5	NA	NA	67311	2197.5
		10	NA	NA	67286	2195
		15	NA	NA	67261	2192.5
		20	NA	NA	67236	2190

Note 1: Applicable for transmitter testing.
Note 2: Applicable if UL is configured on the CC.
Note 3: Applicable if no UL is configured on the CC.

This report shall not be reproduced except in full, without the written approval of UL Verification Services (Guangzhou) Co., Ltd, Song Shan Lake Branch

Band	Test Frequency ID	Bandwidth [MHz]	NUL	Frequency of Uplink [MHz]	NDL	Frequency of Downlink [MHz]
Band 71	Low Range	5	133147	665.5	68611	619.5
		10	133172	668	68636	622
		15	133197	670.5	68661	624.5
		20	133222	673	68686	627
	Mid Range	5/10/15	133297	680.5	68761	634.5
		20	133322	683	68786	637
	High Range	5	133447	695.5	68911	649.5
		10	133422	693	68886	647
		15	133397	690.5	68861	644.5
		20	133372	688	68836	642

This report shall not be reproduced except in full, without the written approval of UL Verification Services (Guangzhou) Co., Ltd, Song Shan Lake Branch

5.3. MAXIMUM AVERAGE OUTPUT POWER

LTE Band 2

Part 24							
EIRP Limit(W)		2.0					
Antenna Gain (dBi)		-0.9					
Bandwidth (MHz)	Modulation	Low Frequency (MHz)	Upper Frequency (MHz)	Conducted Average (dBm)	EIRP Average (W)	99% OBW (MHz)	Emission Designator
1.4	QPSK	1850.7	1909.3	20.52	0.092	1.084	1M08G7W
	16QAM			19.68	0.076	1.082	1M08D7W
3	QPSK	1851.5	1908.5	20.51	0.091	2.682	2M68G7W
	16QAM			19.68	0.076	2.682	2M68D7W
5	QPSK	1852.5	1907.5	20.65	0.094	4.485	4M49G7W
	16QAM			19.71	0.076	4.482	4M48D7W
10	QPSK	1855.0	1905.0	20.52	0.092	8.964	8M96G7W
	16QAM			19.64	0.075	8.960	8M96D7W
15	QPSK	1857.5	1902.5	20.47	0.091	13.447	13M4G7W
	16QAM			19.67	0.075	13.439	13M4D7W
20	QPSK	1860.0	1900.0	20.57	0.093	17.977	18M0G7W
	16QAM			19.62	0.074	17.984	18M0D7W

LTE Band 4

Part 27							
EIRP Limit(W)		1.0					
Antenna Gain (dBi)		0.1					
Bandwidth (MHz)	Modulation	Low Frequency (MHz)	Upper Frequency (MHz)	Conducted Average (dBm)	EIRP Average (W)	99% OBW (MHz)	Emission Designator
1.4	QPSK	1710.7	1754.3	20.52	0.115	1.089	1M09G7W
	16QAM			19.64	0.094	1.089	1M09D7W
3	QPSK	1711.5	1753.5	20.47	0.114	2.692	2M69G7W
	16QAM			19.62	0.094	2.694	2M69D7W
5	QPSK	1712.5	1752.5	20.72	0.121	4.501	4M50G7W
	16QAM			19.67	0.095	4.497	4M50D7W
10	QPSK	1715	1750	20.55	0.116	8.987	8M99G7W
	16QAM			19.72	0.096	8.978	8M98D7W
15	QPSK	1717.5	1747.5	20.48	0.114	13.465	13M5G7W
	16QAM			19.64	0.094	13.461	13M5D7W
20	QPSK	1720	1745	20.57	0.117	18.037	18M0G7W
	16QAM			19.69	0.095	18.018	18M0D7W

This report shall not be reproduced except in full, without the written approval of UL Verification Services (Guangzhou) Co., Ltd, Song Shan Lake Branch

LTE Band 5

Part 22H							
ERP Limit(W)		7.0					
Antenna Gain (dBi)		-3.9					
Bandwidth (MHz)	Modulation	Low Frequency (MHz)	Upper Frequency (MHz)	Conducted Average (dBm)	ERP Average (W)	99% OBW (MHz)	Emission Designator
1.4	QPSK	824.7	848.3	22.95	0.049	1.088	1M09G7W
	16QAM			21.98	0.039	1.089	1M09D7W
3	QPSK	825.5	847.5	22.99	0.049	2.697	2M70G7W
	16QAM			22.13	0.041	2.691	2M70D7W
5	QPSK	826.5	846.5	23.09	0.051	4.498	4M50G7W
	16QAM			22.01	0.039	4.512	4M51D7W
10	QPSK	829	844	22.99	0.049	9.002	9M00G7W
	16QAM			22.16	0.041	8.996	9M00D7W

LTE Band 7

Part 27							
EIRP Limit(W)		2.0					
Antenna Gain (dBi)		-0.5					
Bandwidth (MHz)	Modulation	Low Frequency (MHz)	Upper Frequency (MHz)	Conducted Average (dBm)	EIRP Average (W)	99% OBW (MHz)	Emission Designator
5	QPSK	2502.5	2567.5	18.62	0.065	4.500	4M50G7W
	16QAM			17.78	0.053	4.498	4M50D7W
10	QPSK	2505	2565	18.47	0.063	8.982	8M98G7W
	16QAM			17.64	0.052	8.971	8M97D7W
15	QPSK	2507.5	2562.5	18.44	0.062	13.459	13M5G7W
	16QAM			17.59	0.051	13.454	13M5D7W
20	QPSK	2510	2560	18.54	0.064	18.012	18M0G7W
	16QAM			17.48	0.050	18.018	18M0D7W

This report shall not be reproduced except in full, without the written approval of UL Verification Services (Guangzhou) Co., Ltd, Song Shan Lake Branch

LTE Band 12

Part 27							
ERP Limit(W)		3.0					
Antenna Gain (dBi)		-2.7					
Bandwidth (MHz)	Modulation	Low Frequency (MHz)	Upper Frequency (MHz)	Conducted Average (dBm)	ERP Average (W)	99% OBW (MHz)	Emission Designator
1.4	QPSK	699.7	715.3	22.74	0.062	1.085	1M09G7W
	16QAM			21.88	0.050	1.082	1M08D7W
3	QPSK	700.5	714.5	22.75	0.062	2.682	2M68G7W
	16QAM			21.89	0.051	2.683	2M68D7W
5	QPSK	701.5	713.5	22.90	0.064	4.475	4M48G7W
	16QAM			21.88	0.050	4.478	4M48D7W
10	QPSK	704.0	711.0	22.78	0.062	8.946	8M95G7W
	16QAM			21.95	0.051	8.945	8M95D7W

LTE Band 13

Part 27							
ERP Limit(W)		3.0					
Antenna Gain (dBi)		-8.8					
Bandwidth (MHz)	Modulation	Low Frequency (MHz)	Upper Frequency (MHz)	Conducted Average (dBm)	ERP Average (W)	99% OBW (MHz)	Emission Designator
5	QPSK	706.5	713.5	23.21	0.017	4.485	4M49G7W
	16QAM			22.28	0.014	4.484	4M48D7W
10	QPSK	709.0	711.0	23.10	0.016	8.958	8M96G7W
	16QAM			23.23	0.017	8.956	8M96D7W

This report shall not be reproduced except in full, without the written approval of UL Verification Services (Guangzhou) Co., Ltd, Song Shan Lake Branch

LTE Band 25

Part 24							
EIRP Limit(W)		2.0					
Antenna Gain (dBi)		-0.9					
Bandwidth (MHz)	Modulation	Low Frequency (MHz)	Upper Frequency (MHz)	Conducted Average (dBm)	EIRP Average (W)	99% OBW (MHz)	Emission Designator
1.4	QPSK	1850.7	1914.3	20.63	0.094	1.085	1M09G7W
	16QAM			19.82	0.078	1.082	1M08D7W
3	QPSK	1851.5	1913.5	20.62	0.094	2.683	2M68G7W
	16QAM			19.76	0.077	2.683	2M68D7W
5	QPSK	1852.5	1912.5	20.74	0.096	4.484	4M48G7W
	16QAM			19.81	0.078	4.482	4M48D7W
10	QPSK	1855	1910	20.64	0.094	8.963	8M96G7W
	16QAM			19.79	0.077	8.958	8M96D7W
15	QPSK	1857.5	1907.5	20.55	0.092	13.433	13M4G7W
	16QAM			19.81	0.078	13.437	13M4D7W
20	QPSK	1860	1905	20.71	0.096	17.97	18M0G7W
	16QAM			19.80	0.078	17.959	18M0D7W

LTE Band 26

Part 22							
ERP Limit(W)		7.0					
Antenna Gain (dBi)		-3.9					
Bandwidth (MHz)	Modulation	Low Frequency (MHz)	Upper Frequency (MHz)	Conducted Average (dBm)	ERP Average (W)	99% OBW (MHz)	Emission Designator
1.4	QPSK	824.7	848.3	21.13	0.032	1.086	1M09G7W
	16QAM			21.49	0.035	1.081	1M08D7W
3	QPSK	825.5	847.5	21.13	0.032	2.689	2M69G7W
	16QAM			21.48	0.035	2.684	2M68D7W
5	QPSK	826.5	846.5	21.27	0.033	4.485	4M49G7W
	16QAM			21.50	0.035	4.486	4M49D7W
10	QPSK	829	844	21.22	0.033	8.992	8M99G7W
	16QAM			21.51	0.035	8.988	8M99D7W
15	QPSK	831.5	841.5	21.18	0.033	13.503	13M5G7W
	16QAM			21.44	0.035	13.507	13M5D7W

This report shall not be reproduced except in full, without the written approval of UL Verification Services (Guangzhou) Co., Ltd, Song Shan Lake Branch

LTE Band 26

Part 90S							
ERP Limit(W)		100.0					
Antenna Gain (dBi)		-0.23					
Bandwidth (MHz)	Modulation	Low Frequency (MHz)	Upper Frequency (MHz)	Conducted Average (dBm)	ERP Average (W)	99% OBW (MHz)	Emission Designator
1.4	QPSK	814.7	823.3	21.30	0.009	1.085	1M09G7W
	16QAM			21.73	0.010	1.082	1M08D7W
3	QPSK	815.5	822.5	21.26	0.009	2.688	2M69G7W
	16QAM			21.61	0.010	2.684	2M68D7W
5	QPSK	816.5	821.5	21.36	0.010	4.483	4M48G7W
	16QAM			21.63	0.010	4.486	4M49D7W
10	QPSK	819	819	21.38	0.010	8.978	8M98G7W
	16QAM			21.55	0.010	8.976	8M98D7W

LTE Band 41

Part 27							
EIRP Limit(W)		2.0					
Antenna Gain (dBi)		-0.5					
Bandwidth (MHz)	Modulation	Low Frequency (MHz)	Upper Frequency (MHz)	Conducted Average (dBm)	EIRP Average (W)	99% OBW (MHz)	Emission Designator
5	QPSK	2498.5	2687.5	24.64	0.259	4.478	4M48G7W
	16QAM			23.76	0.212	4.484	4M48D7W
10	QPSK	2501	2685	24.57	0.255	8.966	8M97G7W
	16QAM			23.64	0.206	8.972	8M97D7W
15	QPSK	2503.5	2682.5	24.68	0.262	13.608	13M6G7W
	16QAM			23.57	0.203	13.605	13M6D7W
20	QPSK	2506	2680	24.54	0.254	18.19	18M2G7W
	16QAM			23.54	0.201	18.165	18M2D7W

This report shall not be reproduced except in full, without the written approval of UL Verification Services (Guangzhou) Co., Ltd, Song Shan Lake Branch

LTE Band 66

Part 27							
EIRP Limit(W)		1.0					
Antenna Gain (dBi)		0.4					
Bandwidth (MHz)	Modulation	Low Frequency (MHz)	Upper Frequency (MHz)	Conducted Average (dBm)	EIRP Average (W)	99% OBW (MHz)	Emission Designator
1.4	QPSK	1710.7	1779.3	20.47	0.122	1.085	1M09G7W
	16QAM			19.67	0.102	1.082	1M08D7W
3	QPSK	1711.5	1778.5	20.43	0.121	2.687	2M69G7W
	16QAM			19.60	0.100	2.682	2M68D7W
5	QPSK	1712.5	1777.5	20.58	0.125	4.478	4M48G7W
	16QAM			19.75	0.104	4.482	4M48D7W
10	QPSK	1715	1775	20.48	0.122	8.968	8M97G7W
	16QAM			19.64	0.101	8.964	8M96D7W
15	QPSK	1717.5	1772.5	20.49	0.123	13.444	13M4G7W
	16QAM			19.73	0.103	13.441	13M4D7W
20	QPSK	1720	1770	20.62	0.126	17.975	18M0G7W
	16QAM			19.57	0.099	17.976	18M0D7W

LTE Band 71

Part 27							
EIRP Limit(W)		3.0					
Antenna Gain (dBi)		-3.2					
Bandwidth (MHz)	Modulation	Low Frequency (MHz)	Upper Frequency (MHz)	Conducted Average (dBm)	EIRP Average (W)	99% OBW (MHz)	Emission Designator
5	QPSK	665.5	695.5	22.93	0.094	4.485	4M49G7W
	16QAM			22.09	0.077	4.483	4M48D7W
10	QPSK	668	693	22.80	0.091	8.969	8M97G7W
	16QAM			21.92	0.074	8.966	8M97D7W
15	QPSK	670.5	690.5	22.79	0.091	13.445	13M4G7W
	16QAM			21.94	0.075	13.442	13M4D7W
20	QPSK	673	688	22.89	0.093	17.997	18M0G7W
	16QAM			22.04	0.077	17.993	18M0D7W

This report shall not be reproduced except in full, without the written approval of UL Verification Services (Guangzhou) Co., Ltd, Song Shan Lake Branch

5.4. WORST-CASE CONFIGURATION AND MODE

During all testing, EUT is in link mode with base station emulator at maximum power level. The worst-case scenario for all measurements is based on the average conducted output power measurement investigation results. Output power measurements were measured on QPSK, 16QAM. All testing was performed using QPSK and 16QAM modulations to represent the worst case.

The radiated spurious emissions measurements were carried out in semi-anechoic chamber with 3-meter test range, and EUT was investigated in three orthogonal orientations X,Y and Z. It was determined that X orientation was the worst-case.

Radiated spurious emissions were investigated below 30 MHz, 30 MHz - 1 GHz and above 1 GHz. There are no emissions found on below 1GHz and above 18 GHz, the emissions between 1 GHz – 18 GHz are tested ate the low, mid, high channel and the worse configuration.

Test Items	Worst case test configuration			
Description	Modulation	Channel	Bandwidth (MHz)	RB Configuration
Radiated Spurious Emissions	QPSK	L, M, H	Maximum BW	RB size=1, RB Location= Low

This report shall not be reproduced except in full, without the written approval of UL Verification Services (Guangzhou) Co., Ltd, Song Shan Lake Branch

5.5. DESCRIPTION OF AVAILABLE ANTENNAS

Antenna	Band	Antenna Type	MAX Antenna Gain (dBi)
Ant0	LTE Band 2	LDS	-0.9
Ant0	LTE Band 4	LDS	0.1
Ant0	LTE Band 5	LDS	-3.9
Ant0	LTE Band 7	LDS	-0.5
Ant0	LTE Band 12	LDS	-2.7
Ant0	LTE Band 13	LDS	-8.8
Ant0	LTE Band 25	LDS	-0.9
Ant0	LTE Band 26 (814~824 MHz)	LDS	-9.4
Ant0	LTE Band 26 (824~849 MHz)	LDS	-3.9
Ant3	LTE Band 41	LDS	-0.5
Ant0	LTE Band 66	LDS	0.4
Ant0	LTE Band 71	LDS	-3.2

Band	Transmit and Receive Mode	Description
LTE Band 2	☒1TX, 2RX	Main antenna can be used as transmitting/receiving antenna, DIV antenna can be used as receiving antenna
LTE Band 4	☒1TX, 2RX	Main antenna can be used as transmitting/receiving antenna, DIV antenna can be used as receiving antenna
LTE Band 5	☒1TX, 2RX	Main antenna can be used as transmitting/receiving antenna, DIV antenna can be used as receiving antenna
LTE Band 7	☒1TX, 2RX	Main antenna can be used as transmitting/receiving antenna, DIV antenna can be used as receiving antenna
LTE Band 12	☒1TX, 2RX	Main antenna can be used as transmitting/receiving antenna, DIV antenna can be used as receiving antenna
LTE Band 13	☒1TX, 2RX	Main antenna can be used as transmitting/receiving antenna, DIV antenna can be used as receiving antenna
LTE Band 25	☒1TX, 2RX	Main antenna can be used as transmitting/receiving antenna, DIV antenna can be used as receiving antenna
LTE Band 26	☒1TX, 2RX	Main antenna can be used as transmitting/receiving antenna, DIV antenna can be used as receiving antenna

This report shall not be reproduced except in full, without the written approval of UL Verification Services (Guangzhou) Co., Ltd, Song Shan Lake Branch

LTE Band 41	☒1TX, 2RX	Main antenna can be used as transmitting/receiving antenna, DIV antenna can be used as receiving antenna
LTE Band 66	☒1TX, 2RX	Main antenna can be used as transmitting/receiving antenna, DIV antenna can be used as receiving antenna
LTE Band 71	☒1TX, 2RX	Main antenna can be used as transmitting/receiving antenna, DIV antenna can be used as receiving antenna

Note: The value of the antenna gain was declared by customer.

This report shall not be reproduced except in full, without the written approval of UL Verification Services (Guangzhou) Co., Ltd, Song Shan Lake Branch

5.6. DESCRIPTION OF TEST SETUP

Conducted

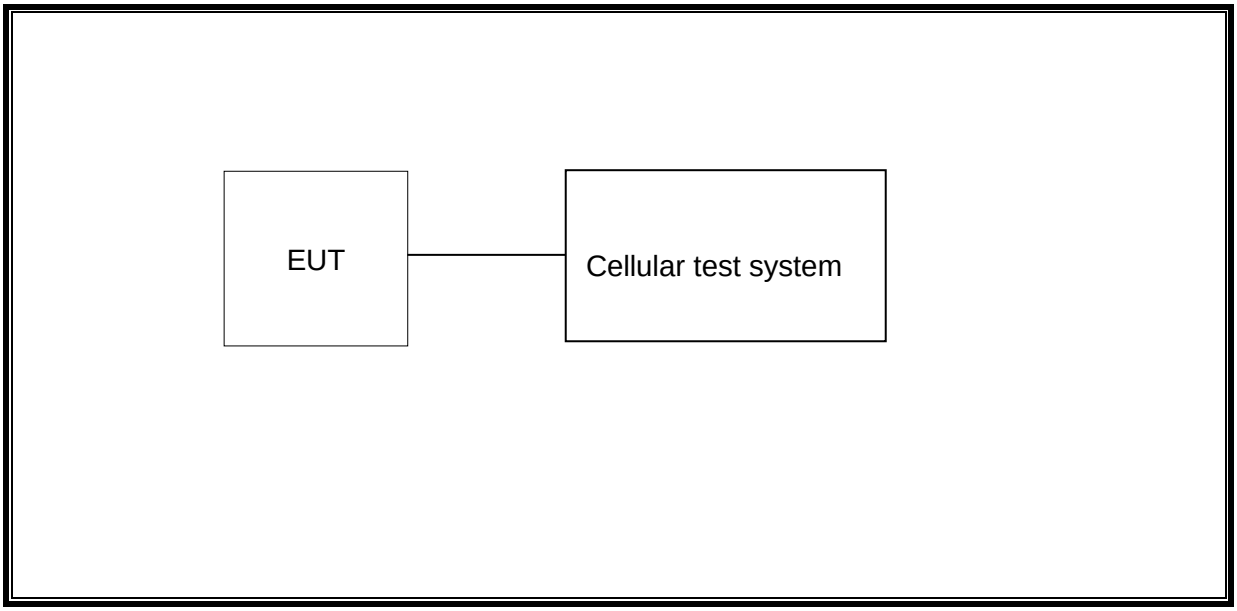

Radiated

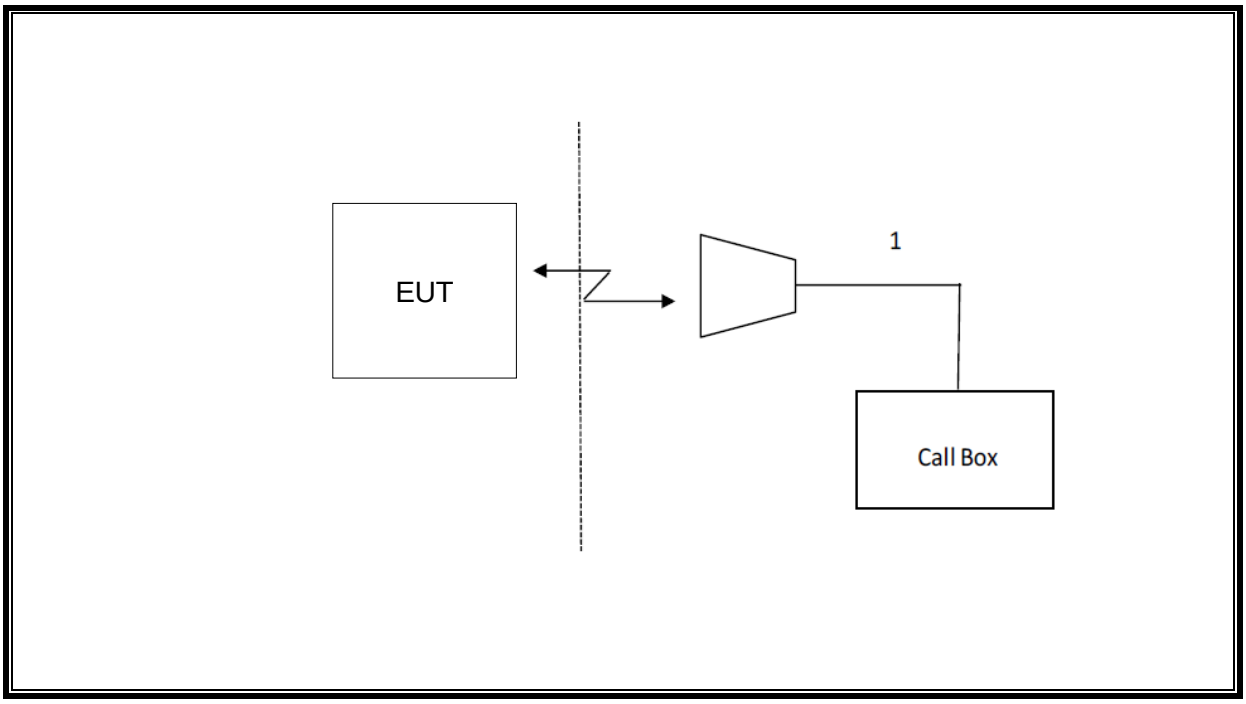

This report shall not be reproduced except in full, without the written approval of UL Verification Services (Guangzhou) Co., Ltd, Song Shan Lake Branch

6. MEASURING INSTRUMENT AND SOFTWARE USED

Antenna Terminal Test						
Instrument						
Used	Equipment	Manufacturer	Model No.	Serial No.	Last Cal.	Next Cal.
☑	Spectrum Analyzer	R&S	FSV40	S422060001	Oct.12, 2023	Oct.11, 2024
☑	Wideband Radio Communication Tester	R&S	CMW500	155523	Oct.12, 2023	Oct.11, 2024
☑	DC Power Supply	Array	3662A	A1512015	Oct.12, 2023	Oct.11, 2024
Software						
Used	Description		Manufacturer	Name		Version
☑	Tonsend Cellular Test System		Tonsend	JS1120 RF Auto Test System		3.1.46
Radiated Test						
Instrument						
Used	Equipment	Manufacturer	Model No.	Serial No.	Last Cal.	Next Cal.
☑	MXE EMI Receiver	KESIGHT	N9038A	MY56400036	Oct.12, 2023	Oct.11, 2024
☑	Hybrid Log Periodic Antenna	TDK	HLP-3003C	130959	Aug.02, 2021	Aug.01, 2024
☑	Preamplifier	HP	8447D	2944A09099	Oct.12, 2023	Oct.11, 2024
☑	EMI Measurement Receiver	R&S	ESR26	101377	Oct.12, 2023	Oct.11, 2024
☑	Horn Antenna	TDK	HRN-0118	130940	July 20, 2021	July 19, 2024
☑	Horn Antenna	Schwarzbeck	BBHA9170	697	July 20, 2021	July 19, 2024
☑	Preamplifier	TDK	PA-02-0118	TRS-305-00067	Oct.12, 2023	Oct.11, 2024
☑	Preamplifier	TDK	PA-02-2	TRS-307-00003	Oct.12, 2023	Oct.11, 2024
☑	Loop antenna	Schwarzbeck	1519B	00008	Dec.14, 2021	Dec.13, 2024
☑	High Pass Filter	Wi	WHKX10-2700-3000-18000-40SS	23	Oct.12, 2023	Oct.11, 2024
Software						
Used	Description		Manufacturer	Name		Version
☑	Test Software for Radiated disturbance		Farad	EZ-EMC		Ver. UL-3A1

This report shall not be reproduced except in full, without the written approval of UL Verification Services (Guangzhou) Co., Ltd, Song Shan Lake Branch

7. ANTENNA TERMINAL TEST RESULTS

7.1. EFFECTIVE (ISOTROPIC) RADIATED POWER OF TRANSMITTER

RULE PART(S)

FCC: §2.1046, §22.913, §24.232, §27.50

LIMITS

22.913(a) The ERP of mobile transmitters and auxiliary test transmitters must not exceed 7 Watts.
24.232(c) Mobile/portable stations are limited to 2 watts e.i.r.p. peak power and the equipment must employ means to limit the power to the minimum necessary for successful communications.
27.50(c) Portable stations (hand-held devices) in the 600 MHz uplink band and the 698-746 MHz band, and fixed and mobile stations in the 600 MHz uplink band are limited to 3 watts ERP.
27.50(d) Fixed, mobile, and portable (hand-held) stations operating in the 1710-1755 MHz band and mobile and portable stations operating in the 1695-1710 MHz and 1755-1780 MHz bands are limited to 1 watts EIRP.
27.50(h) Mobile stations are limited to 2.0 watts EIRP. All user stations are limited to 2.0 watts transmitter output power.
In addition, when the transmitter power is measured in terms of average value, the peak-to-average ratio of the power shall not exceed 13 dB.

TEST PROCEDURE

Refer to ANSI C63.26:2015 and KDB 971168 D01 Section 5.6
ERP/ EIRP = PMeas + GT − LC
where:
ERP or EIRP = effective or equivalent isotropically radiated power, respectively (expressed in the same units as PMeas, typically dBW or dBm);
PMeas = measured transmitter output power or PSD, in dBm or dBW;
GT = gain of the transmitting antenna, in dBd (ERP) or dBi (EIRP);
LC = signal attenuation in the connecting cable between the transmitter and antenna, in dB
The transmitter has a maximum radiated ERP / EIRP output powers as follows:

TEST SETUP

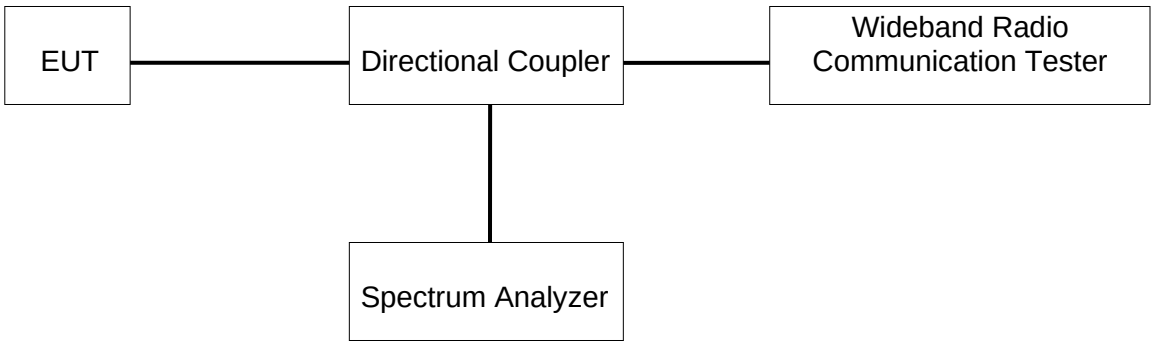

This report shall not be reproduced except in full, without the written approval of UL Verification Services (Guangzhou) Co., Ltd, Song Shan Lake Branch

TEST ENVIRONMENT

Temperature	23.4°C	Relative Humidity	57.2%
Atmosphere Pressure	101kPa	Test Voltage	DC 3.87 V

RESULTS

Please refer to Appendix A.

This report shall not be reproduced except in full, without the written approval of UL Verification Services (Guangzhou) Co., Ltd, Song Shan Lake Branch

7.2. PEAK TO AVERAGE RADIO

LIMITS

In addition, when the transmitter power is measured in terms of average value, the peak-to-average ratio of the power shall not exceed 13 dB.

TEST PROCEDURE

Refer to KDB 971168 D01 Power Meas License Digital Systems v03r01;

The transmitter output was connected to a CMW500 Test Set and configured to operate at maximum power. The PAR was measured on the Spectrum Analyzer.

TEST SETUP

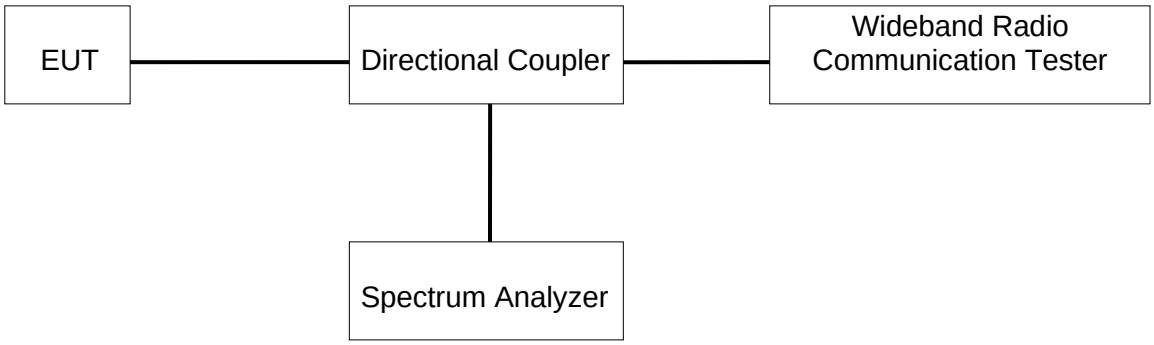

TEST ENVIRONMENT

Temperature	23.4°C	Relative Humidity	57.2%
Atmosphere Pressure	101kPa	Test Voltage	DC 3.87 V

RESULTS

Middle was used to measure as the worst case. The results from all CCDF plots are passed with 13dB peak-to-average power ratio criteria.

Please refer to Appendix B.

This report shall not be reproduced except in full, without the written approval of UL Verification Services (Guangzhou) Co., Ltd, Song Shan Lake Branch

7.3. OCCUPIED BANDWIDTH

RULE PART(S)

FCC: §2.1049

LIMITS

For reporting purposes only.

TEST PROCEDURE

The transmitter output was connected to a calibrated coaxial cable and coupler, the other end of which was connected to a spectrum analyzer. The occupied bandwidth was measured with the spectrum analyzer at the low, middle and high channel in each band. The -26dB bandwidth was also measured and recorded.

(Refer to KDB 971168 D01 Power Meas License Digital Systems v03r01)

TEST SETUP

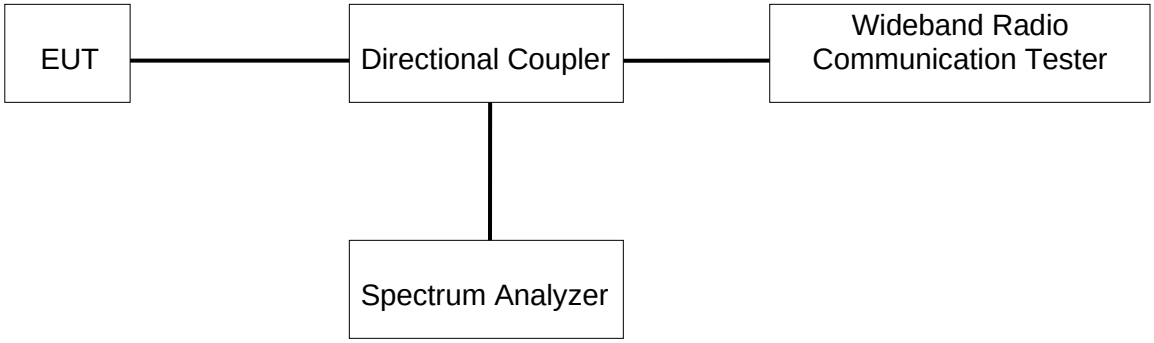

TEST ENVIRONMENT

Temperature	23.4°C	Relative Humidity	57.2%
Atmosphere Pressure	101kPa	Test Voltage	DC 3.87 V

RESULTS

There is no limit required and power is the same for low, middle and high channel, therefore, only middle channel was tested.

Please refer to Appendix C.

This report shall not be reproduced except in full, without the written approval of UL Verification Services (Guangzhou) Co., Ltd, Song Shan Lake Branch

7.4. BAND EDGE EMISSIONS

RULE PART(S)

FCC §2.1051, §22.917, §24.238, §27.53

LIMITS

The power of any emission outside of the authorized operating frequency ranges must be attenuated below the transmitting power (P) by a factor of at least 43 + 10 log (P) dB.

TEST PROCEDURE

Refer to KDB 971168 D01 Power Meas License Digital Systems v03r01
The transmitter output was connected to a CMW500 Test Set and configured to operate at maximum power. The band edge emissions were measured at the required operating frequencies in each band on the Spectrum Analyzer.

a) Set the RBW = 1 ~ 1.5 % of OBW (Typically limited to a minimum RBW of 1% of the OBW)
b) Set VBW ≥ 3 × RBW;
c) Set span ≥ 1.5 times the OBW;
d) Sweep time = Auto;
e) Detector = RMS;
f) Ensure that the number of measurement points ≥ 2*Span/RBW;
g) Trace mode = Average (100);

This report shall not be reproduced except in full, without the written approval of UL Verification Services (Guangzhou) Co., Ltd, Song Shan Lake Branch

TEST SETUP

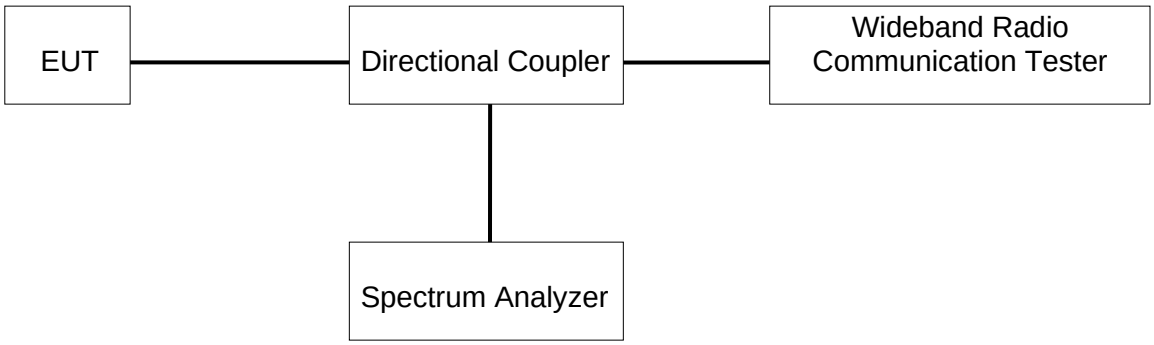

TEST ENVIRONMENT

Temperature	23.4°C	Relative Humidity	57.2%
Atmosphere Pressure	101kPa	Test Voltage	DC 3.87 V

RESULTS

Please refer to Appendix D.

This report shall not be reproduced except in full, without the written approval of UL Verification Services (Guangzhou) Co., Ltd, Song Shan Lake Branch

7.5. SPURIOUS EMISSION AT ANTENNA TERMINAL

RULE PART(S)

FCC: §2.1051, §22.901, §22.917, §24.238, §27.53

LIMITS

FCC: §22.901, §22.917, §24.238
The power of any emission outside of the authorized operating frequency ranges must be attenuated below the transmitting power (P) by a factor of at least 43 + 10 log (P) dB.

TEST PROCEDURE

Per KDB 971168 D01 Power Meas License Digital Systems v03r01
The RF output of the transmitter was connected to a spectrum analyzer through a calibrated coaxial cable. Sufficient scans were taken to show the out-of-band Emissions, if any, up to 10th harmonic. Multiple sweeps were recorded in maximum hold mode using a peak detector to ensure that the worst-case emissions were caught.

a) Set the RBW = 100 kHz for emission below 1GHz and 1MHz for emissions above 1GHz (Tests were performed 1 MHz [Worst case], to sweep 1 time for all frequency range)
b) Set VBW ≥ 3 × RBW;
c) Set span ≥ 1.5 times the OBW;
d) Sweep time = auto couple;
e) Detector = rms;
f) Ensure that the number of measurement points = Max (40001);
g) Trace mode = average (LTE 5), Maxhold (LTE Band7);

Note: Please refer to section 5.4 for bandwidth and RB setting about LTE bands.

TEST SETUP

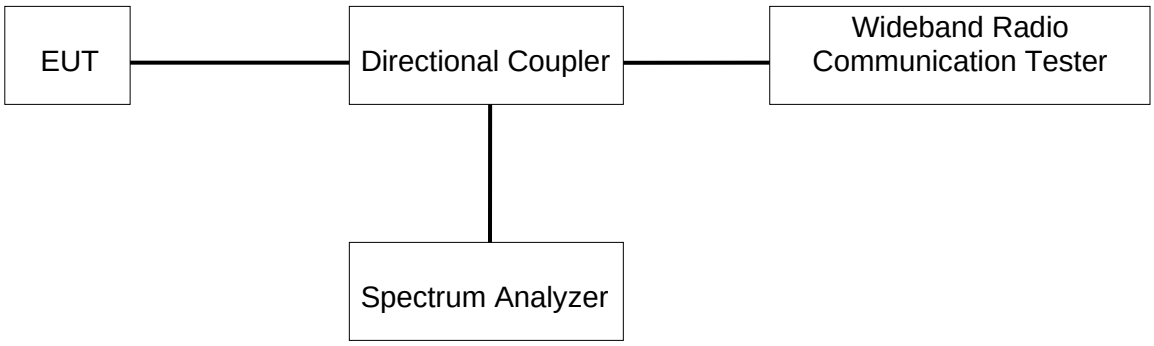

This report shall not be reproduced except in full, without the written approval of UL Verification Services (Guangzhou) Co., Ltd, Song Shan Lake Branch

TEST ENVIRONMENT

Temperature	23.4°C	Relative Humidity	57.2%
Atmosphere Pressure	101kPa	Test Voltage	DC 3.87 V

RESULTS

Please refer to Appendix E.

This report shall not be reproduced except in full, without the written approval of UL Verification Services (Guangzhou) Co., Ltd, Song Shan Lake Branch

7.6. FREQUENCY STABILITY

Rule Part:
FCC: §2.1055, §22.355, §24.235, §27.54

LIMITS

§22.355 - The carrier frequency shall not depart from the reference frequency in excess of ±2.5 ppm for mobile stations.

§24.235 and §27.54 - The frequency stability shall be sufficient to ensure that the fundamental emissions stay within the authorized bands of operation.

TEST PROCEDURE

Refer to KDB 971168 D01 Power Meas License Digital Systems v03r01.

	Normal Test Conditions	Extreme Test Conditions
Relative Humidity	45 % - 75 %	/
Atmospheric Pressure	100 kPa ~102 kPa	/
Temperature	T_N (Normal Temperature): 24.7 °C	T_L (Low Temperature): -30 °C
		T_H (High Temperature): 50 °C
Supply Voltage	V_N (Normal Voltage): DC 3.87 V	V_L (Low Voltage): DC 6.1V
		V_H (High Voltage): DC 8.3 V

TEST SETUP

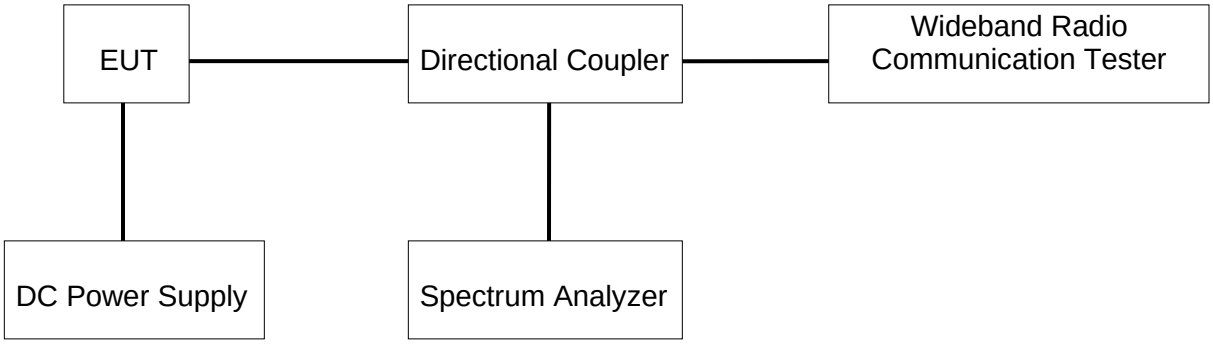

RESULTS

The peak frequency error is recorded (worst-case).

Please refer to Appendix F.

This report shall not be reproduced except in full, without the written approval of UL Verification Services (Guangzhou) Co., Ltd, Song Shan Lake Branch

8. APPENDIX

8.1. Appendix A: Effective (Isotropic) Radiated Power Output Data

8.1.1. LTE Band 2

Bandwidth	Modulation	RB size	RB offset	Channel	Channel	Channel
				18607	18900	19193
1.4MHz	QPSK	1	0	20.52	20.31	20.15
		1	2	20.50	20.32	20.14
		1	5	20.52	20.32	20.16
		3	0	20.48	20.34	20.18
		3	1	20.46	20.34	20.18
		3	3	20.49	20.33	20.18
		6	0	19.49	19.33	19.17
	16QAM	1	0	19.64	19.52	19.35
		1	2	19.68	19.54	19.37
		1	5	19.63	19.47	19.31
		3	0	19.35	19.24	19.09
		3	1	19.36	19.24	19.09
		3	3	19.33	19.18	19.10
		6	0	18.50	18.37	18.04
Bandwidth	Modulation	RB size	RB offset	Channel	Channel	Channel
				18615	18900	19185
3MHz	QPSK	1	0	20.49	20.36	20.22
		1	8	20.51	20.39	20.20
		1	14	20.42	20.34	20.11
		8	0	19.48	19.34	19.22
		8	4	19.47	19.33	19.18
		8	7	19.42	19.33	19.16
		15	0	19.43	19.38	19.13
	16QAM	1	0	19.66	19.58	19.08
		1	8	19.68	19.52	19.07
		1	14	19.56	19.48	19.03
		8	0	18.50	18.35	18.21
		8	4	18.47	18.34	18.21
		8	7	18.47	18.36	18.18
		15	0	18.44	18.29	18.12
Bandwidth	Modulation	RB size	RB offset	Channel	Channel	Channel
				18625	18900	19175
5MHz	QPSK	1	0	20.65	20.47	20.36
		1	12	20.58	20.49	20.33
		1	24	20.50	20.51	20.36
		12	0	19.47	19.39	19.16
		12	6	19.46	19.35	19.18
		12	13	19.40	19.39	19.17
		25	0	19.47	19.41	19.22
	16QAM	1	0	19.55	19.66	19.31

This report shall not be reproduced except in full, without the written approval of UL Verification Services (Guangzhou) Co., Ltd, Song Shan Lake Branch

		1	12	19.47	19.68	19.29
		1	24	19.45	19.71	19.27
		12	0	18.44	18.36	18.21
		12	6	18.41	18.34	18.17
		12	13	18.39	18.41	18.21
		25	0	18.47	18.37	18.26
Bandwidth	Modulation	RB size	RB offset	Channel	Channel	Channel
				18650	18900	19150
10MHz	QPSK	1	0	20.52	20.26	20.27
		1	24	20.42	20.39	20.26
		1	49	20.32	20.39	20.13
		25	0	19.40	19.27	19.30
		25	12	19.42	19.29	19.30
		25	25	19.45	19.44	19.33
		50	0	19.43	19.38	19.35
	16QAM	1	0	19.64	19.48	19.47
		1	24	19.63	19.59	19.41
		1	49	19.49	19.59	19.31
		25	0	18.42	18.28	18.34
		25	12	18.43	18.29	18.34
		25	25	18.41	18.46	18.33
		50	0	18.39	18.35	18.32
Bandwidth	Modulation	RB size	RB offset	Channel	Channel	Channel
				18675	18900	19125
15MHz	QPSK	1	0	20.47	20.18	20.30
		1	38	20.36	20.35	20.29
		1	74	20.14	20.34	20.12
		36	0	19.42	19.27	19.30
		36	18	19.40	19.21	19.34
		36	37	19.41	19.23	19.29
		75	0	19.36	19.37	19.31
	16QAM	1	0	19.63	19.48	19.20
		1	38	19.50	19.67	19.15
		1	74	19.34	19.63	19.02
		36	0	18.42	18.28	18.29
		36	18	18.41	18.29	18.27
		36	37	18.39	18.31	18.28
		75	0	18.30	18.33	18.30
Bandwidth	Modulation	RB size	RB offset	Channel	Channel	Channel
				18700	18900	19100
20MHz	QPSK	1	0	20.57	20.22	20.23
		1	49	20.49	20.42	20.22
		1	99	20.24	20.38	20.08
		50	0	19.38	19.26	19.42
		50	25	19.37	19.24	19.43
		50	50	19.27	19.51	19.28
		100	0	19.32	19.36	19.40

This report shall not be reproduced except in full, without the written approval of UL Verification Services (Guangzhou) Co., Ltd, Song Shan Lake Branch

		1	0	19.57	19.42	19.34
		1	49	19.46	19.62	19.29
		1	99	19.21	19.59	19.09
	16QAM	50	0	18.35	18.25	18.46
		50	25	18.33	18.24	18.45
		50	50	18.23	18.49	18.29
		100	0	18.28	18.33	18.35

This report shall not be reproduced except in full, without the written approval of UL Verification Services (Guangzhou) Co., Ltd, Song Shan Lake Branch

8.1.1. LTE Band 4

Bandwidth	Modulation	RB size	RB offset	Channel 19957	Channel 20175	Channel 20393
1.4MHz	QPSK	1	0	20.10	20.41	20.44
		1	2	20.13	20.36	20.44
		1	5	20.14	20.38	20.45
		3	0	20.16	20.32	20.52
		3	1	20.17	20.35	20.51
		3	3	20.21	20.36	20.51
		6	0	19.16	19.35	19.51
	16QAM	1	0	19.25	19.31	19.60
		1	2	19.37	19.26	19.64
		1	5	19.32	19.14	19.59
		3	0	19.05	19.31	19.40
		3	1	19.04	19.30	19.40
		3	3	19.07	19.21	19.37
		6	0	18.01	18.31	18.55
Bandwidth	Modulation	RB size	RB offset	Channel 19965	Channel 20175	Channel 20385
3MHz	QPSK	1	0	20.11	20.40	20.43
		1	8	20.22	20.40	20.46
		1	14	20.22	20.36	20.47
		8	0	19.10	19.36	19.52
		8	4	19.12	19.37	19.50
		8	7	19.18	19.35	19.51
		15	0	19.15	19.36	19.49
	16QAM	1	0	19.32	19.62	19.35
		1	8	19.37	19.53	19.40
		1	14	19.41	19.45	19.42
		8	0	18.21	18.38	18.56
		8	4	18.17	18.35	18.54
		8	7	18.26	18.37	18.54
		15	0	18.18	18.31	18.47
Bandwidth	Modulation	RB size	RB offset	Channel 19975	Channel 20175	Channel 20375
5MHz	QPSK	1	0	20.32	20.52	20.61
		1	12	20.40	20.48	20.63
		1	24	20.44	20.46	20.72
		12	0	19.18	19.39	19.50
		12	6	19.17	19.35	19.52
		12	13	19.28	19.37	19.53
		25	0	19.23	19.37	19.54
	16QAM	1	0	19.19	19.67	19.53
		1	12	19.31	19.66	19.57
		1	24	19.37	19.65	19.63
		12	0	18.15	18.41	18.53

This report shall not be reproduced except in full, without the written approval of UL Verification Services (Guangzhou) Co., Ltd, Song Shan Lake Branch

		12	6	18.11	18.41	18.54
		12	13	18.25	18.37	18.53
		25	0	18.22	18.35	18.53
Bandwidth	Modulation	RB size	RB offset	Channel	Channel	Channel
				20000	20175	20350
10MHz	QPSK	1	0	20.21	20.48	20.46
		1	24	20.38	20.43	20.46
		1	49	20.47	20.34	20.55
		25	0	19.19	19.41	19.39
		25	12	19.22	19.41	19.39
		25	25	19.42	19.38	19.51
		50	0	19.34	19.42	19.46
	16QAM	1	0	19.35	19.61	19.58
		1	24	19.52	19.63	19.65
		1	49	19.60	19.50	19.72
		25	0	18.17	18.40	18.36
		25	12	18.17	18.38	18.38
		25	25	18.38	18.35	18.53
		50	0	18.30	18.32	18.43
Bandwidth	Modulation	RB size	RB offset	Channel	Channel	Channel
				20025	20175	20325
15MHz	QPSK	1	0	20.07	20.32	20.36
		1	38	20.31	20.31	20.45
		1	74	20.45	20.17	20.48
		36	0	19.12	19.32	19.35
		36	18	19.20	19.37	19.35
		36	37	19.21	19.37	19.34
		75	0	19.28	19.36	19.41
	16QAM	1	0	19.21	19.64	19.48
		1	38	19.49	19.61	19.62
		1	74	19.61	19.47	19.63
		36	0	18.10	18.39	18.28
		36	18	18.18	18.43	18.32
		36	37	18.15	18.44	18.31
		75	0	18.24	18.30	18.35
Bandwidth	Modulation	RB size	RB offset	Channel	Channel	Channel
				20050	20175	20300
20MHz	QPSK	1	0	20.05	20.34	20.41
		1	49	20.46	20.37	20.54
		1	99	20.50	20.27	20.57
		50	0	19.18	19.46	19.33
		50	25	19.15	19.45	19.33
		50	50	19.36	19.39	19.52
		100	0	19.27	19.36	19.43

This report shall not be reproduced except in full, without the written approval of UL Verification Services (Guangzhou) Co., Ltd, Song Shan Lake Branch

		1	0	19.01	19.53	19.39
		1	49	19.44	19.69	19.52
		1	99	19.44	19.49	19.50
	16QAM	50	0	18.14	18.39	18.28
		50	25	18.13	18.40	18.28
		50	50	18.33	18.37	18.47
		100	0	18.23	18.38	18.37

This report shall not be reproduced except in full, without the written approval of UL Verification Services (Guangzhou) Co., Ltd, Song Shan Lake Branch

8.1.2. LTE Band 5

Bandwidth	Modulation	RB size	RB offset	Channel 20407	Channel 20525	Channel 20643
1.4MHz	QPSK	1	0	22.76	22.77	22.88
		1	2	22.70	22.73	22.81
		1	5	22.74	22.71	22.84
		3	0	22.83	22.73	22.95
		3	1	22.81	22.74	22.95
		3	3	22.83	22.70	22.88
		6	0	21.78	21.72	21.95
	16QAM	1	0	21.93	21.65	21.97
		1	2	21.96	21.63	21.98
		1	5	21.95	21.60	21.86
		3	0	21.69	21.59	21.84
		3	1	21.69	21.59	21.84
		3	3	21.70	21.53	21.78
		6	0	20.66	20.66	20.95
Bandwidth	Modulation	RB size	RB offset	Channel 20415	Channel 20525	Channel 20635
3MHz	QPSK	1	0	22.80	22.74	22.99
		1	8	22.79	22.68	22.99
		1	14	22.77	22.69	22.94
		8	0	21.71	21.68	21.96
		8	4	21.72	21.71	21.98
		8	7	21.71	21.67	21.91
		15	0	21.71	21.72	22.01
	16QAM	1	0	21.97	21.95	22.13
		1	8	21.97	21.82	22.12
		1	14	21.93	21.83	22.06
		8	0	20.80	20.71	21.05
		8	4	20.78	20.72	21.03
		8	7	20.77	20.67	20.98
		15	0	20.74	20.63	20.93
Bandwidth	Modulation	RB size	RB offset	Channel 20425	Channel 20525	Channel 20625
5MHz	QPSK	1	0	22.97	22.86	23.01
		1	12	22.91	22.80	23.07
		1	24	22.90	22.81	23.09
		12	0	21.69	21.81	22.07
		12	6	21.69	21.84	22.05
		12	13	21.78	21.67	21.88
		25	0	21.77	21.79	22.00
	16QAM	1	0	21.88	22.01	21.95
		1	12	21.76	21.99	22.01
		1	24	21.80	21.97	22.01
		12	0	20.66	20.87	21.01

This report shall not be reproduced except in full, without the written approval of UL Verification Services (Guangzhou) Co., Ltd, Song Shan Lake Branch

		12	6	20.69	20.87	21.00
		12	13	20.81	20.71	20.73
		25	0	20.76	20.76	20.84
Bandwidth	Modulation	RB size	RB offset	Channel	Channel	Channel
				20450	20525	20600
10MHz	QPSK	1	0	22.85	22.73	22.78
		1	24	22.82	22.75	22.86
		1	49	22.75	22.72	22.99
		25	0	21.67	21.93	21.60
		25	12	21.66	21.91	21.60
		25	25	21.61	21.88	21.51
		50	0	21.68	21.88	21.64
	16QAM	1	0	22.02	21.96	21.98
		1	24	21.96	21.92	22.00
		1	49	21.93	21.91	22.16
		25	0	20.65	20.96	20.57
		25	12	20.65	20.99	20.57
		25	25	20.61	20.87	20.55
		50	0	20.58	20.90	20.58

This report shall not be reproduced except in full, without the written approval of UL Verification Services (Guangzhou) Co., Ltd, Song Shan Lake Branch

8.1.3. LTE Band 7

Bandwidth	Modulation	RB size	RB offset	Channel 20775	Channel 21100	Channel 21425
5MHz	QPSK	1	0	18.14	17.97	18.58
		1	12	18.08	17.96	18.52
		1	24	18.10	17.96	18.62
		12	0	17.05	16.90	17.55
		12	6	17.03	16.86	17.54
		12	13	17.00	16.84	17.46
		25	0	17.00	16.87	17.48
	16QAM	1	0	17.25	16.91	17.68
		1	12	17.24	16.86	17.72
		1	24	17.30	16.88	17.78
		12	0	16.08	15.84	16.59
		12	6	16.04	15.85	16.56
		12	13	16.07	15.76	16.47
		25	0	16.01	15.88	16.48
Bandwidth	Modulation	RB size	RB offset	Channel 20800	Channel 21100	Channel 21400
10MHz	QPSK	1	0	18.06	17.82	18.36
		1	24	18.06	17.81	18.45
		1	49	18.16	17.88	18.47
		25	0	16.96	16.86	17.42
		25	12	17.01	16.91	17.43
		25	25	17.15	16.81	17.40
		50	0	17.10	16.85	17.47
	16QAM	1	0	17.19	16.99	17.55
		1	24	17.22	17.00	17.61
		1	49	17.32	17.04	17.64
		25	0	15.99	15.88	16.39
		25	12	16.00	15.88	16.39
		25	25	16.15	15.79	16.42
		50	0	16.04	15.85	16.42
Bandwidth	Modulation	RB size	RB offset	Channel 20825	Channel 21100	Channel 21375
15MHz	QPSK	1	0	17.97	17.76	18.23
		1	38	18.07	17.77	18.44
		1	74	18.05	17.81	18.44
		36	0	16.91	16.82	17.31
		36	18	16.94	16.81	17.32
		36	37	16.94	16.77	17.33
		75	0	17.01	16.88	17.33
	16QAM	1	0	17.11	16.93	17.41
		1	38	17.27	16.94	17.59

This report shall not be reproduced except in full, without the written approval of UL Verification Services (Guangzhou) Co., Ltd, Song Shan Lake Branch

		1	74	17.22	16.99	17.58
		36	0	15.90	15.82	16.28
		36	18	15.96	15.79	16.29
		36	37	15.90	15.80	16.27
		75	0	15.98	15.72	16.28
Bandwidth	Modulation	RB size	RB offset	Channel	Channel	Channel
				20850	21100	21350
20MHz	QPSK	1	0	18.02	17.75	18.19
		1	49	18.17	17.82	18.50
		1	99	17.99	17.94	18.54
		50	0	16.94	16.87	17.27
		50	25	16.94	16.83	17.28
		50	50	17.13	16.78	17.39
		100	0	17.07	16.84	17.30
	16QAM	1	0	16.97	16.94	17.18
		1	49	17.12	17.04	17.45
		1	99	16.96	17.15	17.48
		50	0	15.91	15.87	16.27
		50	25	15.90	15.87	16.27
		50	50	16.12	15.82	16.35
		100	0	16.05	15.84	16.27

This report shall not be reproduced except in full, without the written approval of UL Verification Services (Guangzhou) Co., Ltd, Song Shan Lake Branch

8.1.4. LTE Band 12

Bandwidth	Modulation	RB size	RB offset	Channel	Channel	Channel
				23017	23095	23173
1.4MHz	QPSK	1	0	22.64	22.60	22.34
		1	2	22.62	22.50	22.33
		1	5	22.65	22.54	22.35
		3	0	22.71	22.58	22.44
		3	1	22.71	22.60	22.42
		3	3	22.74	22.54	22.51
		6	0	21.65	21.60	21.39
	16QAM	1	0	21.86	21.71	21.54
		1	2	21.88	21.75	21.59
		1	5	21.84	21.65	21.58
		3	0	21.59	21.53	21.35
		3	1	21.56	21.51	21.35
		3	3	21.58	21.45	21.37
		6	0	20.60	20.69	20.28
Bandwidth	Modulation	RB size	RB offset	Channel	Channel	Channel
				23025	23095	23165
3MHz	QPSK	1	0	22.75	22.66	22.47
		1	8	22.69	22.56	22.36
		1	14	22.71	22.56	22.34
		8	0	21.67	21.58	21.48
		8	4	21.65	21.55	21.50
		8	7	21.65	21.54	21.41
		15	0	21.65	21.57	21.42
	16QAM	1	0	21.87	21.89	21.36
		1	8	21.86	21.76	21.34
		1	14	21.87	21.71	21.29
		8	0	20.79	20.65	20.48
		8	4	20.76	20.63	20.50
		8	7	20.77	20.62	20.45
		15	0	20.71	20.56	20.33
Bandwidth	Modulation	RB size	RB offset	Channel	Channel	Channel
				23035	23095	23155
5MHz	QPSK	1	0	22.88	22.73	22.65
		1	12	22.87	22.73	22.62
		1	24	22.90	22.71	22.60
		12	0	21.69	21.61	21.51
		12	6	21.72	21.63	21.51
		12	13	21.74	21.53	21.41
		25	0	21.74	21.58	21.51
	16QAM	1	0	21.76	21.88	21.62
		1	12	21.74	21.88	21.55
		1	24	21.79	21.84	21.57
		12	0	20.72	20.71	20.59

This report shall not be reproduced except in full, without the written approval of UL Verification Services (Guangzhou) Co., Ltd, Song Shan Lake Branch

		12	6	20.73	20.73	20.62
		12	13	20.78	20.63	20.41
		25	0	20.81	20.66	20.53
Bandwidth	Modulation	RB size	RB offset	Channel	Channel	Channel
				23060	23095	23130
10MHz	QPSK	1	0	22.76	22.71	22.69
		1	24	22.78	22.62	22.54
		1	49	22.70	22.48	22.39
		25	0	21.67	21.57	21.61
		25	12	21.66	21.59	21.63
		25	25	21.73	21.49	21.48
		50	0	21.74	21.58	21.60
	16QAM	1	0	21.88	21.92	21.57
		1	24	21.95	21.84	21.42
		1	49	21.81	21.71	21.30
		25	0	20.74	20.67	20.70
		25	12	20.74	20.69	20.73
		25	25	20.82	20.60	20.59
		50	0	20.74	20.58	20.63

This report shall not be reproduced except in full, without the written approval of UL Verification Services (Guangzhou) Co., Ltd, Song Shan Lake Branch

8.1.5. LTE Band 13

Bandwidth	Modulation	RB size	RB offset	Channel	Channel	Channel
				23205	23230	23255
5MHz	QPSK	1	0	23.09	23.21	23.16
		1	12	23.14	23.17	23.10
		1	24	23.17	23.15	23.13
		12	0	22.00	22.00	21.98
		12	6	21.97	22.00	21.94
		12	13	22.03	22.07	21.90
		25	0	22.02	22.07	21.96
	16QAM	1	0	21.96	22.04	22.28
		1	12	21.98	22.05	22.21
		1	24	22.06	22.03	22.24
		12	0	21.00	20.98	20.98
		12	6	20.98	20.98	20.99
		12	13	21.02	21.08	20.98
		25	0	21.03	21.10	20.94
Bandwidth	Modulation	RB size	RB offset	Channel	Channel	Channel
				N/A	23230	N/A
10MHz	QPSK	1	0	N/A	23.03	N/A
		1	24	N/A	23.10	N/A
		1	49	N/A	23.07	N/A
		25	0	N/A	21.99	N/A
		25	12	N/A	22.00	N/A
		25	25	N/A	22.09	N/A
		50	0	N/A	22.02	N/A
	16QAM	1	0	N/A	22.16	N/A
		1	24	N/A	22.23	N/A
		1	49	N/A	22.22	N/A
		25	0	N/A	21.02	N/A
		25	12	N/A	21.00	N/A
		25	25	N/A	21.09	N/A
		50	0	N/A	21.06	N/A

This report shall not be reproduced except in full, without the written approval of UL Verification Services (Guangzhou) Co., Ltd, Song Shan Lake Branch

8.1.6. LTE Band 25

Bandwidth	Modulation	RB size	RB offset	Channel	Channel	Channel
				26047	26365	26683
1.4MHz	QPSK	1	0	20.58	20.45	20.18
		1	2	20.62	20.47	20.16
		1	5	20.63	20.50	20.16
		3	0	20.57	20.46	20.23
		3	1	20.59	20.47	20.22
		3	3	20.63	20.48	20.27
		6	0	19.57	19.47	19.23
	16QAM	1	0	19.75	19.61	19.37
		1	2	19.82	19.67	19.42
		1	5	19.78	19.60	19.40
		3	0	19.49	19.35	19.14
		3	1	19.51	19.36	19.13
		3	3	19.48	19.31	19.13
		6	0	18.39	18.48	18.06
Bandwidth	Modulation	RB size	RB offset	Channel	Channel	Channel
				26055	26365	26675
3MHz	QPSK	1	0	20.60	20.44	20.15
		1	8	20.62	20.51	20.15
		1	14	20.52	20.45	20.20
		8	0	19.58	19.47	19.26
		8	4	19.59	19.43	19.24
		8	7	19.54	19.49	19.15
		15	0	19.56	19.47	19.21
	16QAM	1	0	19.75	19.61	19.38
		1	8	19.75	19.64	19.34
		1	14	19.65	19.60	19.37
		8	0	18.65	18.50	18.22
		8	4	18.65	18.51	18.25
		8	7	18.60	18.52	18.19
		15	0	18.58	18.50	18.16
Bandwidth	Modulation	RB size	RB offset	Channel	Channel	Channel
				26065	26365	26665
5MHz	QPSK	1	0	20.74	20.56	20.35
		1	12	20.66	20.63	20.36
		1	24	20.67	20.65	20.41
		12	0	19.58	19.50	19.30
		12	6	19.57	19.47	19.30
		12	13	19.52	19.52	19.11
		25	0	19.58	19.48	19.28
	16QAM	1	0	19.72	19.71	19.31
		1	12	19.60	19.78	19.33
		1	24	19.58	19.81	19.32
		12	0	18.52	18.43	18.28

This report shall not be reproduced except in full, without the written approval of UL Verification Services (Guangzhou) Co., Ltd, Song Shan Lake Branch

		12	6	18.53	18.46	18.31
		12	13	18.50	18.48	18.09
		25	0	18.58	18.46	18.22
Bandwidth	Modulation	RB size	RB offset	Channel	Channel	Channel
				26090	26365	26640
10MHz	QPSK	1	0	20.64	20.44	20.25
		1	24	20.58	20.56	20.22
		1	49	20.40	20.48	20.17
		25	0	19.54	19.46	19.20
		25	12	19.53	19.42	19.19
		25	25	19.52	19.60	19.09
		50	0	19.54	19.55	19.14
	16QAM	1	0	19.79	19.58	19.39
		1	24	19.76	19.72	19.36
		1	49	19.55	19.70	19.37
		25	0	18.55	18.42	18.17
		25	12	18.51	18.44	18.21
		25	25	18.49	18.55	18.12
		50	0	18.52	18.52	18.10
Bandwidth	Modulation	RB size	RB offset	Channel	Channel	Channel
				26115	26365	26615
15MHz	QPSK	1	0	20.55	20.30	20.36
		1	38	20.45	20.49	20.26
		1	74	20.17	20.43	20.18
		36	0	19.49	19.43	19.29
		36	18	19.52	19.44	19.29
		36	37	19.48	19.44	19.30
		75	0	19.41	19.49	19.19
	16QAM	1	0	19.72	19.58	19.25
		1	38	19.63	19.81	19.12
		1	74	19.35	19.73	19.07
		36	0	18.45	18.48	18.20
		36	18	18.43	18.44	18.21
		36	37	18.45	18.41	18.24
		75	0	18.38	18.48	18.18
Bandwidth	Modulation	RB size	RB offset	Channel	Channel	Channel
				26140	26365	26590
20MHz	QPSK	1	0	20.71	20.31	20.27
		1	49	20.54	20.58	20.22
		1	99	20.34	20.54	20.06
		50	0	19.52	19.42	19.44
		50	25	19.49	19.38	19.45
		50	50	19.35	19.63	19.20
		100	0	19.41	19.51	19.33

This report shall not be reproduced except in full, without the written approval of UL Verification Services (Guangzhou) Co., Ltd, Song Shan Lake Branch

		1	0	19.72	19.53	19.36
		1	49	19.49	19.80	19.29
		1	99	19.30	19.73	19.16
	16QAM	50	0	18.47	18.37	18.46
		50	25	18.47	18.40	18.47
		50	50	18.30	18.62	18.22
		100	0	18.40	18.47	18.34

This report shall not be reproduced except in full, without the written approval of UL Verification Services (Guangzhou) Co., Ltd, Song Shan Lake Branch

8.1.7. LTE Band 26 (814-824 MHz)

Bandwidth	Modulation	RB size	RB offset	Channel 26697	Channel 26740	Channel 26783
1.4MHz	QPSK	1	0	**21.3**	21.24	21.07
		1	2	21.28	21.19	21.02
		1	5	21.24	21.2	21.06
		3	0	21.27	21.2	21.05
		3	1	21.28	21.23	21.03
		3	3	21.28	21.19	21.05
		6	0	21.28	21.17	21.01
	16QAM	1	0	21.69	21.52	21.33
		1	2	**21.73**	21.54	21.35
		1	5	21.64	21.55	21.3
		3	0	21.34	21.24	21.17
		3	1	21.31	21.27	21.17
		3	3	21.29	21.26	21.13
		6	0	21.21	21.3	20.98
Bandwidth	Modulation	RB size	RB offset	Channel 26705	Channel 26740	Channel 26775
3MHz	QPSK	1	0	21.25	21.2	21.04
		1	8	21.25	21.09	20.95
		1	14	21.2	21.02	20.95
		8	0	21.18	21.18	20.95
		8	4	21.22	21.08	20.99
		8	7	21.19	21.09	20.96
		15	0	**21.26**	21.16	21.01
	16QAM	1	0	21.54	**21.61**	21.35
		1	8	21.5	21.54	21.27
		1	14	21.53	21.54	21.23
		8	0	21.31	21.22	21.08
		8	4	21.27	21.11	21.1
		8	7	21.28	21.14	21.05
		15	0	21.2	21.18	21.03
Bandwidth	Modulation	RB size	RB offset	Channel 26715	Channel 26740	Channel 26765
5MHz	QPSK	1	0	21.31	21.22	21.18
		1	12	21.32	21.13	21.08
		1	24	21.2	21.08	21.01
		12	0	**21.36**	21.26	21.11
		12	6	21.31	21.18	21.06
		12	13	21.22	21.11	21.04
		25	0	21.27	21.22	21.11
	16QAM	1	0	**21.63**	21.59	21.5
		1	12	21.57	21.53	21.37
		1	24	21.44	21.51	21.34
		12	0	21.33	21.39	21.17

This report shall not be reproduced except in full, without the written approval of UL Verification Services (Guangzhou) Co., Ltd, Song Shan Lake Branch

		12	6	21.27	21.28	21.11
		12	13	21.19	21.23	21.12
		25	0	21.28	21.27	21.1
Bandwidth	Modulation	RB size	RB offset	Channel	Channel	Channel
				N/A	26740	N/A
10MHz	QPSK	1	0	N/A	21.27	N/A
		1	24	N/A	21.23	N/A
		1	49	N/A	21.02	N/A
		25	0	N/A	21.38	N/A
		25	12	N/A	21.23	N/A
		25	25	N/A	21.21	N/A
		50	0	N/A	21.29	N/A
	16QAM	1	0	N/A	21.55	N/A
		1	24	N/A	21.5	N/A
		1	49	N/A	21.29	N/A
		25	0	N/A	21.43	N/A
		25	12	N/A	21.27	N/A
		25	25	N/A	21.25	N/A
		50	0	N/A	21.3	N/A

This report shall not be reproduced except in full, without the written approval of UL Verification Services (Guangzhou) Co., Ltd, Song Shan Lake Branch

8.1.8. LTE Band 26 (824-849 MHz)

Bandwidth	Modulation	RB size	RB offset	Channel 26797	Channel 26915	Channel 27033
1.4MHz	QPSK	1	0	20.95	20.97	21.08
		1	2	20.95	21.01	21.1
		1	5	21	21	21.11
		3	0	20.97	21.03	**21.13**
		3	1	20.95	21.02	21.11
		3	3	20.99	21.07	21.11
		6	0	20.93	21.07	21.12
	16QAM	1	0	21.23	21.43	21.35
		1	2	21.3	21.48	21.44
		1	5	21.26	**21.49**	21.39
		3	0	21.12	21.09	21.27
		3	1	21.06	21.09	21.25
		3	3	21.08	21.08	21.25
		6	0	20.92	21	21.11
Bandwidth	Modulation	RB size	RB offset	Channel 26805	Channel 26915	Channel 27025
3MHz	QPSK	1	0	20.92	20.96	21
		1	8	20.86	20.97	21.05
		1	14	20.87	21.01	21.06
		8	0	20.89	21.04	21.03
		8	4	20.94	21.06	21.06
		8	7	20.91	21.08	21.01
		15	0	20.93	21.05	**21.13**
	16QAM	1	0	21.25	21.37	21.27
		1	8	21.18	**21.48**	21.36
		1	14	21.19	21.46	21.36
		8	0	21.02	21.07	21.12
		8	4	21.03	21.05	21.13
		8	7	21.04	21.06	21.12
		15	0	20.97	21.01	21.02
Bandwidth	Modulation	RB size	RB offset	Channel 26815	Channel 26915	Channel 27015
5MHz	QPSK	1	0	21.03	20.95	21.1
		1	12	21	21.01	21.06
		1	24	20.97	21.12	21.18
		12	0	20.88	21.1	**21.27**
		12	6	20.94	21.08	21.14
		12	13	20.94	21.07	20.99
		25	0	20.93	21.11	21.14
	16QAM	1	0	21.35	21.38	21.4
		1	12	21.26	21.4	21.36
		1	24	21.32	**21.5**	21.48
		12	0	20.93	21.22	21.21

This report shall not be reproduced except in full, without the written approval of UL Verification Services (Guangzhou) Co., Ltd, Song Shan Lake Branch

		12	6	20.98	21.16	21.06
		12	13	21.02	21.17	20.96
		25	0	20.93	21.17	21.14
Bandwidth	Modulation	RB size	RB offset	Channel	Channel	Channel
				26840	26915	26990
10MHz	QPSK	1	0	20.94	20.91	21.2
		1	24	21.04	21.08	21.12
		1	49	20.92	21.05	21.1
		25	0	20.81	21.15	20.88
		25	12	20.92	21.04	21.08
		25	25	20.79	21.16	20.72
		50	0	20.84	**21.22**	20.9
	16QAM	1	0	21.25	21.34	21.46
		1	24	21.25	**21.51**	21.36
		1	49	21.22	21.49	21.4
		25	0	20.85	21.19	20.89
		25	12	20.96	21.14	21.12
		25	25	20.84	21.25	20.8
		50	0	20.83	21.26	20.86
Bandwidth	Modulation	RB size	RB offset	Channel	Channel	Channel
				26865	26915	26965
15MHz	QPSK	1	0	20.91	20.97	20.94
		1	38	20.93	**21.18**	21.1
		1	74	21.02	20.98	21.02
		36	0	20.89	21.08	21.01
		36	18	20.96	21.01	20.99
		36	37	20.93	21.16	20.97
		75	0	20.96	21.14	21.03
	16QAM	1	0	21.26	21.2	21.32
		1	38	21.25	**21.44**	21.37
		1	74	21.31	21.25	21.37
		36	0	20.91	21.11	21.11
		36	18	20.94	21.11	21.09
		36	37	20.93	21.25	20.94
		75	0	20.95	21.11	21.01

This report shall not be reproduced except in full, without the written approval of UL Verification Services (Guangzhou) Co., Ltd, Song Shan Lake Branch

8.1.9. LTE Band 41

Bandwidth	Modulation	RB size	RB offset	Channel	Channel	Channel
				39675	40620	41565
5MHz	QPSK	1	0	24.38	24.64	24.45
		1	12	24.41	24.29	24.61
		1	24	24.41	24.12	24.39
		12	0	23.54	23.63	23.68
		12	6	23.67	23.13	23.36
		12	13	23.41	23.29	23.10
		25	0	23.45	23.52	23.55
	16QAM	1	0	23.44	23.21	23.15
		1	12	23.66	23.47	23.76
		1	24	23.24	23.15	23.50
		12	0	22.60	22.37	22.51
		12	6	22.52	22.17	22.68
		12	13	22.40	22.22	22.37
		25	0	22.63	22.59	22.27
Bandwidth	Modulation	RB size	RB offset	Channel	Channel	Channel
				39700	40620	41540
10MHz	QPSK	1	0	24.40	24.51	24.34
		1	24	24.56	24.37	24.57
		1	49	24.45	24.11	24.36
		25	0	23.44	23.60	23.65
		25	12	23.70	23.20	23.29
		25	25	23.46	23.42	23.17
		50	0	23.50	23.54	23.55
	16QAM	1	0	23.32	23.26	23.24
		1	24	23.54	23.44	23.64
		1	49	23.26	23.23	23.40
		25	0	22.64	22.42	22.56
		25	12	22.65	22.10	22.61
		25	25	22.52	22.26	22.43
		50	0	22.61	22.47	22.21
Bandwidth	Modulation	RB size	RB offset	Channel	Channel	Channel
				39725	40620	41515
15MHz	QPSK	1	0	24.35	24.37	24.23
		1	38	24.68	24.41	24.59
		1	74	24.43	24.03	24.28
		36	0	23.34	23.51	23.64
		36	18	23.62	23.29	23.37
		36	37	23.37	23.35	23.31
		75	0	23.51	23.40	23.49
	16QAM	1	0	23.27	23.27	23.38

This report shall not be reproduced except in full, without the written approval of UL Verification Services (Guangzhou) Co., Ltd, Song Shan Lake Branch

		1	38	23.53	23.48	23.57
		1	74	23.35	23.00	23.25
		36	0	22.61	22.37	22.43
		36	18	22.59	22.25	22.52
		36	37	22.44	22.13	22.39
		75	0	22.61	22.32	22.32
Bandwidth	Modulation	RB size	RB offset	Channel	Channel	Channel
				39750	40620	41490
20MHz	QPSK	1	0	24.2	24.29	24.36
		1	49	**24.54**	24.42	24.48
		1	99	24.36	24.11	24.2
		50	0	23.46	23.44	23.51
		50	25	23.53	23.38	23.47
		50	50	23.48	23.22	23.34
		100	0	23.45	23.27	23.44
	16QAM	1	0	23.31	23.3	23.42
		1	49	23.53	23.42	**23.54**
		1	99	23.39	23.15	23.24
		50	0	22.5	22.47	22.49
		50	25	22.56	22.39	22.48
		50	50	22.51	22.24	22.38
		100	0	22.46	22.29	22.4

This report shall not be reproduced except in full, without the written approval of UL Verification Services (Guangzhou) Co., Ltd, Song Shan Lake Branch

8.1.10. LTE Band 66

Bandwidth	Modulation	RB size	RB offset	Channel 131979	Channel 132322	Channel 132665	Tune up limit (dBm)
1.4MHz	QPSK	1	0	20.13	20.43	19.45	21
		1	2	20.13	20.40	19.36	21
		1	5	20.19	20.42	19.40	21
		3	0	20.19	20.44	19.37	21
		3	1	20.18	20.45	19.39	21
		3	3	20.20	20.47	19.37	21
		6	0	19.20	19.41	18.86	20.5
	16QAM	1	0	19.27	19.60	18.84	20.5
		1	2	19.34	19.67	18.81	20.5
		1	5	19.30	19.63	18.74	20.5
		3	0	19.07	19.34	18.78	20.5
		3	1	19.08	19.35	18.79	20.5
		3	3	19.06	19.34	18.76	20.5
		6	0	18.20	18.30	17.88	19.5
Bandwidth	Modulation	RB size	RB offset	Channel 131987	Channel 132322	Channel 132657	Tune up limit (dBm)
3MHz	QPSK	1	0	20.18	20.40	19.53	21
		1	8	20.24	20.40	19.42	21
		1	14	20.20	20.43	19.30	21
		8	0	19.19	19.41	18.94	20.5
		8	4	19.17	19.39	18.96	20.5
		8	7	19.20	19.43	18.90	20.5
		15	0	19.17	19.42	18.92	20.5
	16QAM	1	0	19.35	19.60	18.91	20.5
		1	8	19.37	19.56	18.83	20.5
		1	14	19.40	19.57	18.78	20.5
		8	0	18.23	18.40	17.95	19.5
		8	4	18.25	18.38	17.94	19.5
		8	7	18.24	18.48	17.92	19.5
		15	0	18.21	18.36	17.83	19.5
Bandwidth	Modulation	RB size	RB offset	Channel 131997	Channel 132322	Channel 132647	Tune up limit (dBm)
5MHz	QPSK	1	0	20.35	20.50	19.80	21
		1	12	20.39	20.57	19.59	21
		1	24	20.46	20.58	19.53	21
		12	0	19.18	19.42	18.58	20.5
		12	6	19.17	19.43	18.56	20.5
		12	13	19.31	19.44	18.88	20.5
		25	0	19.25	19.47	18.99	20.5
	16QAM	1	0	19.28	19.68	19.27	20.5
		1	12	19.28	19.70	19.00	20.5

This report shall not be reproduced except in full, without the written approval of UL Verification Services (Guangzhou) Co., Ltd, Song Shan Lake Branch

		1	24	19.37	19.75	18.93	20.5
		12	0	18.20	18.44	18.01	19.5
		12	6	18.19	18.42	18.05	19.5
		12	13	18.27	18.48	17.88	19.5
		25	0	18.24	18.42	18.02	19.5
Bandwidth	Modulation	RB size	RB offset	Channel	Channel	Channel	Tune up limit (dBm)
				132022	132322	132622	
10MHz	QPSK	1	0	20.21	20.40	19.92	21
		1	24	20.39	20.47	19.70	21
		1	49	20.46	20.48	19.38	21
		25	0	19.23	19.42	18.77	20.5
		25	12	19.21	19.42	18.79	20.5
		25	25	19.41	19.53	18.54	20.5
		50	0	19.34	19.50	18.68	20.5
	16QAM	1	0	19.37	19.59	19.05	20.5
		1	24	19.50	19.64	18.86	20.5
		1	49	19.61	19.64	18.58	20.5
		25	0	18.18	18.44	17.76	19.5
		25	12	18.16	18.44	17.75	19.5
		25	25	18.41	18.56	17.53	19.5
		50	0	18.31	18.47	17.62	19.5
Bandwidth	Modulation	RB size	RB offset	Channel	Channel	Channel	Tune up limit (dBm)
				132047	132322	132597	
15MHz	QPSK	1	0	20.17	20.35	20.12	21
		1	38	20.39	20.40	19.80	21
		1	74	20.49	20.39	19.36	21
		36	0	19.20	19.40	19.06	20.5
		36	18	19.24	19.38	18.99	20.5
		36	37	19.24	19.39	19.06	20.5
		75	0	19.38	19.45	18.84	20.5
	16QAM	1	0	19.30	19.64	19.32	20.5
		1	38	19.60	19.73	18.95	20.5
		1	74	19.67	19.71	18.50	20.5
		36	0	18.20	18.41	17.95	19.5
		36	18	18.16	18.44	17.96	19.5
		36	37	18.20	18.45	17.97	19.5
		75	0	18.32	18.45	17.79	19.5
Bandwidth	Modulation	RB size	RB offset	Channel	Channel	Channel	Tune up limit (dBm)
				132072	132322	232572	
20MHz	QPSK	1	0	20.15	20.50	20.26	21
		1	49	20.50	20.61	19.98	21
		1	99	20.54	20.62	19.38	21

This report shall not be reproduced except in full, without the written approval of UL Verification Services (Guangzhou) Co., Ltd, Song Shan Lake Branch

		50	0	19.21	19.38	19.21	20.5
		50	25	19.22	19.37	19.26	20.5
		50	50	19.44	19.56	18.75	20.5
		100	0	19.28	19.46	19.02	20.5
	16QAM	1	0	19.14	19.47	19.46	20.5
		1	49	19.50	19.57	19.22	20.5
		1	99	19.50	19.55	18.63	20.5
		50	0	18.15	18.32	18.23	19.5
		50	25	18.16	18.31	18.24	19.5
		50	50	18.39	18.52	17.74	19.5
		100	0	18.25	18.42	18.00	19.5

This report shall not be reproduced except in full, without the written approval of UL Verification Services (Guangzhou) Co., Ltd, Song Shan Lake Branch

8.1.11. LTE Band 71

Bandwidth	Modulation	RB size	RB offset	Channel	Channel	Channel
				133147	133297	133447
5MHz	QPSK	1	0	21.66	22.76	22.86
		1	12	22.80	22.72	22.89
		1	24	22.82	22.76	22.93
		12	0	21.60	21.61	21.79
		12	6	21.62	21.63	21.78
		12	13	21.68	21.62	21.76
		25	0	21.67	21.65	21.79
	16QAM	1	0	21.81	21.68	22.02
		1	12	21.73	21.65	22.05
		1	24	21.73	21.71	22.09
		12	0	20.69	20.65	20.88
		12	6	20.71	20.71	20.85
		12	13	20.79	20.67	20.87
		25	0	20.81	20.70	20.83
Bandwidth	Modulation	RB size	RB offset	Channel	Channel	Channel
				133172	133297	133422
10MHz	QPSK	1	0	22.71	22.56	22.77
		1	24	22.70	22.62	22.77
		1	49	22.71	22.72	22.80
		25	0	21.50	21.59	21.71
		25	12	21.51	21.59	21.71
		25	25	21.70	21.67	21.89
		50	0	21.65	21.66	21.82
	16QAM	1	0	21.87	21.77	21.71
		1	24	21.82	21.80	21.65
		1	49	21.87	21.92	21.74
		25	0	20.58	20.70	20.83
		25	12	20.58	20.71	20.85
		25	25	20.77	20.74	20.95
		50	0	20.67	20.71	20.85
Bandwidth	Modulation	RB size	RB offset	Channel	Channel	Channel
				133197	133297	133397
15MHz	QPSK	1	0	22.65	22.50	22.63
		1	38	22.63	22.61	22.79
		1	74	22.64	22.64	22.72
		36	0	21.50	21.53	21.65
		36	18	21.50	21.57	21.65
		36	37	21.50	21.57	21.65
		75	0	21.62	21.60	21.75
	16QAM	1	0	21.85	21.80	21.49

This report shall not be reproduced except in full, without the written approval of UL Verification Services (Guangzhou) Co., Ltd, Song Shan Lake Branch

		1	38	21.80	21.89	21.70
		1	74	21.79	21.94	21.68
		36	0	20.53	20.69	20.69
		36	18	20.53	20.65	20.70
		36	37	20.56	20.66	20.68
		75	0	20.60	20.67	20.77
Bandwidth	Modulation	RB size	RB offset	Channel	Channel	Channel
				133222	133322	133372
20MHz	QPSK	1	0	22.53	22.62	22.59
		1	49	22.60	22.77	22.77
		1	99	22.58	22.89	22.75
		50	0	21.48	21.60	21.65
		50	25	21.48	21.61	21.64
		50	50	21.67	21.82	21.90
		100	0	21.59	21.70	21.75
	16QAM	1	0	21.61	21.55	21.79
		1	49	21.68	21.73	21.99
		1	99	21.68	21.83	22.04
		50	0	20.56	20.63	20.66
		50	25	20.57	20.60	20.67
		50	50	20.75	20.80	20.92
		100	0	20.62	20.71	20.78

This report shall not be reproduced except in full, without the written approval of UL Verification Services (Guangzhou) Co., Ltd, Song Shan Lake Branch

8.2. Appendix B: Peak-to-Average Ratio(CCDF)

8.2.1. Test Result

Band	Bandwidth	Modulation	Channel	RB Configuration	Result(dB)	Limit(dB)	Verdict
Band2	1.4MHz	QPSK	18900	6RB#0	5.88	13	PASS
Band2	1.4MHz	16QAM	18900	6RB#0	6.54	13	PASS
Band2	3MHz	QPSK	18900	15RB#0	5.92	13	PASS
Band2	3MHz	16QAM	18900	15RB#0	6.68	13	PASS
Band2	5MHz	QPSK	18900	25RB#0	5.90	13	PASS
Band2	5MHz	16QAM	18900	25RB#0	6.56	13	PASS
Band2	10MHz	QPSK	18900	50RB#0	5.84	13	PASS
Band2	10MHz	16QAM	18900	50RB#0	6.54	13	PASS
Band2	15MHz	QPSK	18900	75RB#0	6.14	13	PASS
Band2	15MHz	16QAM	18900	75RB#0	6.64	13	PASS
Band2	20MHz	QPSK	18900	100RB#0	5.78	13	PASS
Band2	20MHz	16QAM	18900	100RB#0	6.54	13	PASS
Band4	1.4MHz	QPSK	20175	6RB#0	5.72	13	PASS
Band4	1.4MHz	16QAM	20175	6RB#0	6.40	13	PASS
Band4	3MHz	QPSK	20175	15RB#0	5.74	13	PASS
Band4	3MHz	16QAM	20175	15RB#0	6.54	13	PASS
Band4	5MHz	QPSK	20175	25RB#0	5.74	13	PASS
Band4	5MHz	16QAM	20175	25RB#0	6.44	13	PASS
Band4	10MHz	QPSK	20175	50RB#0	5.70	13	PASS
Band4	10MHz	16QAM	20175	50RB#0	6.46	13	PASS
Band4	15MHz	QPSK	20175	75RB#0	6.04	13	PASS
Band4	15MHz	16QAM	20175	75RB#0	6.58	13	PASS
Band4	20MHz	QPSK	20175	100RB#0	5.72	13	PASS
Band4	20MHz	16QAM	20175	100RB#0	6.48	13	PASS
Band5	1.4MHz	QPSK	20525	6RB#0	5.42	13	PASS
Band5	1.4MHz	16QAM	20525	6RB#0	6.16	13	PASS
Band5	3MHz	QPSK	20525	15RB#0	5.48	13	PASS
Band5	3MHz	16QAM	20525	15RB#0	6.30	13	PASS
Band5	5MHz	QPSK	20525	25RB#0	5.46	13	PASS
Band5	5MHz	16QAM	20525	25RB#0	6.16	13	PASS
Band5	10MHz	QPSK	20525	50RB#0	5.38	13	PASS
Band5	10MHz	16QAM	20525	50RB#0	6.18	13	PASS
Band7	5MHz	QPSK	21100	25RB#0	5.56	13	PASS
Band7	5MHz	16QAM	21100	25RB#0	6.28	13	PASS
Band7	10MHz	QPSK	21100	50RB#0	5.46	13	PASS
Band7	10MHz	16QAM	21100	50RB#0	6.26	13	PASS
Band7	15MHz	QPSK	21100	75RB#0	5.78	13	PASS
Band7	15MHz	16QAM	21100	75RB#0	6.32	13	PASS
Band7	20MHz	QPSK	21100	100RB#0	5.50	13	PASS
Band7	20MHz	16QAM	21100	100RB#0	6.28	13	PASS
Band12	1.4MHz	QPSK	23095	6RB#0	5.24	13	PASS
Band12	1.4MHz	16QAM	23095	6RB#0	6.06	13	PASS
Band12	3MHz	QPSK	23095	15RB#0	5.30	13	PASS

This report shall not be reproduced except in full, without the written approval of UL Verification Services (Guangzhou) Co., Ltd, Song Shan Lake Branch

Band12	3MHz	16QAM	23095	15RB#0	6.12	13	PASS
Band12	5MHz	QPSK	23095	25RB#0	5.26	13	PASS
Band12	5MHz	16QAM	23095	25RB#0	6.06	13	PASS
Band12	10MHz	QPSK	23095	50RB#0	5.24	13	PASS
Band12	10MHz	16QAM	23095	50RB#0	6.10	13	PASS
Band13	5MHz	QPSK	23230	25RB#0	5.36	13	PASS
Band13	5MHz	16QAM	23230	25RB#0	6.12	13	PASS
Band13	10MHz	QPSK	23230	50RB#0	5.24	13	PASS
Band13	10MHz	16QAM	23230	50RB#0	6.04	13	PASS
Band25	1.4MHz	QPSK	26365	6RB#0	5.90	13	PASS
Band25	1.4MHz	16QAM	26365	6RB#0	6.56	13	PASS
Band25	3MHz	QPSK	26365	15RB#0	5.88	13	PASS
Band25	3MHz	16QAM	26365	15RB#0	6.68	13	PASS
Band25	5MHz	QPSK	26365	25RB#0	5.92	13	PASS
Band25	5MHz	16QAM	26365	25RB#0	6.58	13	PASS
Band25	10MHz	QPSK	26365	50RB#0	5.84	13	PASS
Band25	10MHz	16QAM	26365	50RB#0	6.60	13	PASS
Band25	15MHz	QPSK	26365	75RB#0	6.18	13	PASS
Band25	15MHz	16QAM	26365	75RB#0	6.62	13	PASS
Band25	20MHz	QPSK	26365	100RB#0	5.80	13	PASS
Band25	20MHz	16QAM	26365	100RB#0	6.52	13	PASS
Band26(814-824)	1.4MHz	QPSK	26740	6RB#0	5.46	13	PASS
Band26(814-824)	1.4MHz	16QAM	26740	6RB#0	6.14	13	PASS
Band26(814-824)	3MHz	QPSK	26740	15RB#0	5.48	13	PASS
Band26(814-824)	3MHz	16QAM	26740	15RB#0	6.28	13	PASS
Band26(814-824)	5MHz	QPSK	26740	25RB#0	5.48	13	PASS
Band26(814-824)	5MHz	16QAM	26740	25RB#0	6.18	13	PASS
Band26(814-824)	10MHz	QPSK	26740	50RB#0	5.48	13	PASS
Band26(814-824)	10MHz	16QAM	26740	50RB#0	6.20	13	PASS
Band26(824-849)	1.4MHz	QPSK	26915	6RB#0	5.38	13	PASS
Band26(824-849)	1.4MHz	16QAM	26915	6RB#0	6.10	13	PASS
Band26(824-849)	3MHz	QPSK	26915	15RB#0	5.36	13	PASS
Band26(824-849)	3MHz	16QAM	26915	15RB#0	6.22	13	PASS
Band26(824-849)	5MHz	QPSK	26915	25RB#0	5.42	13	PASS
Band26(824-849)	5MHz	16QAM	26915	25RB#0	6.16	13	PASS
Band26(824-849)	10MHz	QPSK	26915	50RB#0	5.28	13	PASS
Band26(824-849)	10MHz	16QAM	26915	50RB#0	6.10	13	PASS
Band26(824-849)	15MHz	QPSK	26915	75RB#0	5.62	13	PASS
Band26(824-849)	15MHz	16QAM	26915	75RB#0	6.22	13	PASS
Band41	5MHz	QPSK	40620	25RB#0	9.18	13	PASS
Band41	5MHz	16QAM	40620	25RB#0	9.98	13	PASS
Band41	10MHz	QPSK	40620	50RB#0	9.10	13	PASS
Band41	10MHz	16QAM	40620	50RB#0	10.04	13	PASS
Band41	15MHz	QPSK	40620	75RB#0	9.42	13	PASS
Band41	15MHz	16QAM	40620	75RB#0	10.18	13	PASS
Band41	20MHz	QPSK	40620	100RB#0	9.10	13	PASS
Band41	20MHz	16QAM	40620	100RB#0	10.02	13	PASS
Band66	1.4MHz	QPSK	132322	6RB#0	5.42	13	PASS

This report shall not be reproduced except in full, without the written approval of UL Verification Services (Guangzhou) Co., Ltd, Song Shan Lake Branch

Band66	1.4MHz	16QAM	132322	6RB#0	6.30	13	PASS
Band66	3MHz	QPSK	132322	15RB#0	5.50	13	PASS
Band66	3MHz	16QAM	132322	15RB#0	6.32	13	PASS
Band66	5MHz	QPSK	132322	1RB#0	5.18	13	PASS
Band66	5MHz	QPSK	132322	25RB#0	5.50	13	PASS
Band66	5MHz	16QAM	132322	1RB#0	5.82	13	PASS
Band66	5MHz	16QAM	132322	25RB#0	6.22	13	PASS
Band66	10MHz	QPSK	132322	50RB#0	5.48	13	PASS
Band66	10MHz	16QAM	132322	50RB#0	6.24	13	PASS
Band66	15MHz	QPSK	132322	75RB#0	5.84	13	PASS
Band66	15MHz	16QAM	132322	75RB#0	6.38	13	PASS
Band66	20MHz	QPSK	132322	100RB#0	5.56	13	PASS
Band66	20MHz	16QAM	132322	100RB#0	6.36	13	PASS
Band71	5MHz	QPSK	133147	1RB#0	4.88	13	PASS
Band71	5MHz	QPSK	133147	25RB#0	5.42	13	PASS
Band71	5MHz	QPSK	133297	1RB#0	5.38	13	PASS
Band71	5MHz	QPSK	133297	25RB#0	5.66	13	PASS
Band71	5MHz	QPSK	133447	1RB#0	4.86	13	PASS
Band71	5MHz	QPSK	133447	25RB#0	5.34	13	PASS
Band71	5MHz	16QAM	133147	1RB#0	5.62	13	PASS
Band71	5MHz	16QAM	133147	25RB#0	6.08	13	PASS
Band71	5MHz	16QAM	133297	1RB#0	5.94	13	PASS
Band71	5MHz	16QAM	133297	25RB#0	6.32	13	PASS
Band71	5MHz	16QAM	133447	1RB#0	5.56	13	PASS
Band71	5MHz	16QAM	133447	25RB#0	6.16	13	PASS
Band71	10MHz	QPSK	133172	1RB#0	4.72	13	PASS
Band71	10MHz	QPSK	133172	50RB#0	5.52	13	PASS
Band71	10MHz	QPSK	133297	1RB#0	5.02	13	PASS
Band71	10MHz	QPSK	133297	50RB#0	5.60	13	PASS
Band71	10MHz	QPSK	133422	1RB#0	5.18	13	PASS
Band71	10MHz	QPSK	133422	50RB#0	5.36	13	PASS
Band71	10MHz	16QAM	133172	1RB#0	5.58	13	PASS
Band71	10MHz	16QAM	133172	50RB#0	6.24	13	PASS
Band71	10MHz	16QAM	133297	1RB#0	5.70	13	PASS
Band71	10MHz	16QAM	133297	50RB#0	6.38	13	PASS
Band71	10MHz	16QAM	133422	1RB#0	6.12	13	PASS
Band71	10MHz	16QAM	133422	50RB#0	6.18	13	PASS
Band71	15MHz	QPSK	133197	1RB#0	4.76	13	PASS
Band71	15MHz	QPSK	133197	75RB#0	5.86	13	PASS
Band71	15MHz	QPSK	133297	1RB#0	5.14	13	PASS
Band71	15MHz	QPSK	133297	75RB#0	5.98	13	PASS
Band71	15MHz	QPSK	133397	1RB#0	5.34	13	PASS
Band71	15MHz	QPSK	133397	75RB#0	5.72	13	PASS
Band71	15MHz	16QAM	133197	1RB#0	5.60	13	PASS
Band71	15MHz	16QAM	133197	75RB#0	6.34	13	PASS
Band71	15MHz	16QAM	133297	1RB#0	6.02	13	PASS
Band71	15MHz	16QAM	133297	75RB#0	6.46	13	PASS
Band71	15MHz	16QAM	133397	1RB#0	6.04	13	PASS

This report shall not be reproduced except in full, without the written approval of UL Verification Services (Guangzhou) Co., Ltd, Song Shan Lake Branch

Band71	15MHz	16QAM	133397	75RB#0	6.32	13	PASS
Band71	20MHz	QPSK	133222	1RB#0	4.70	13	PASS
Band71	20MHz	QPSK	133222	100RB#0	5.50	13	PASS
Band71	20MHz	QPSK	133322	1RB#0	5.24	13	PASS
Band71	20MHz	QPSK	133322	100RB#0	5.72	13	PASS
Band71	20MHz	QPSK	133372	1RB#0	5.26	13	PASS
Band71	20MHz	QPSK	133372	100RB#0	5.66	13	PASS
Band71	20MHz	16QAM	133222	1RB#0	5.32	13	PASS
Band71	20MHz	16QAM	133222	100RB#0	6.32	13	PASS
Band71	20MHz	16QAM	133322	1RB#0	6.28	13	PASS
Band71	20MHz	16QAM	133322	100RB#0	6.40	13	PASS
Band71	20MHz	16QAM	133372	1RB#0	5.98	13	PASS
Band71	20MHz	16QAM	133372	100RB#0	6.42	13	PASS

This report shall not be reproduced except in full, without the written approval of UL Verification Services (Guangzhou) Co., Ltd, Song Shan Lake Branch

8.2.2. Test Graphs

Band2-1.4MHz-QPSK-18900-6RB#0	Band2-1.4MHz-16QAM-18900-6RB#0
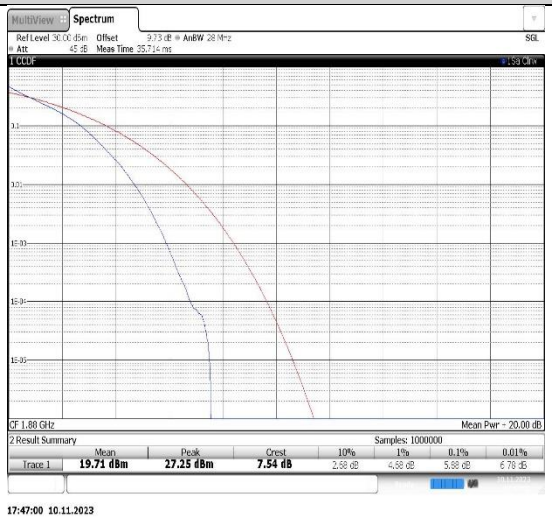	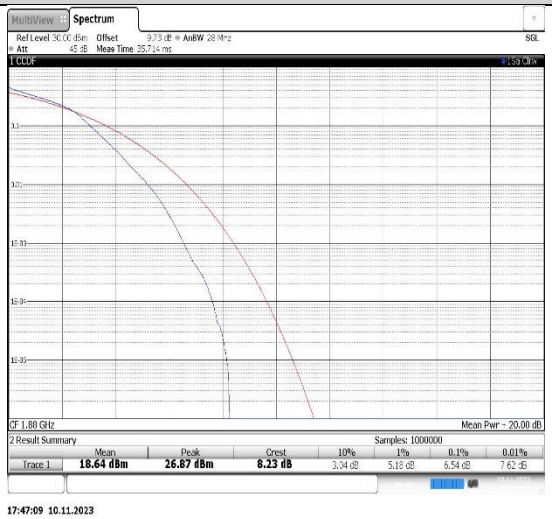
Band2-3MHz-QPSK-18900-15RB#0	**Band2-3MHz-16QAM-18900-15RB#0**
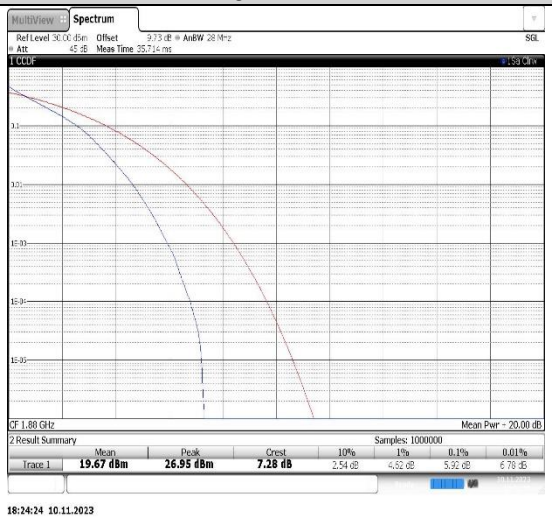	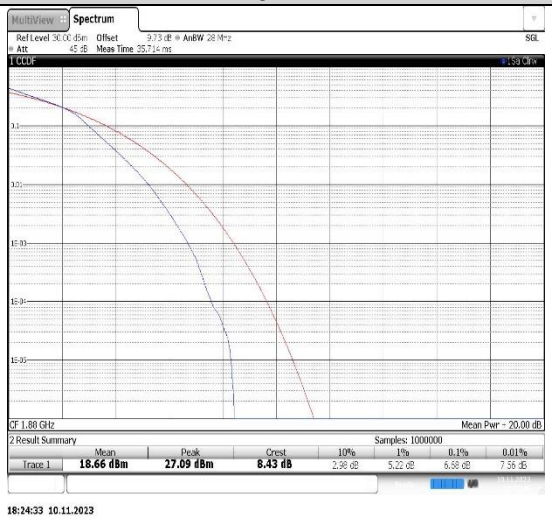
Band2-5MHz-QPSK-18900-25RB#0	**Band2-5MHz-16QAM-18900-25RB#0**

This report shall not be reproduced except in full, without the written approval of UL Verification Services (Guangzhou) Co., Ltd, Song Shan Lake Branch

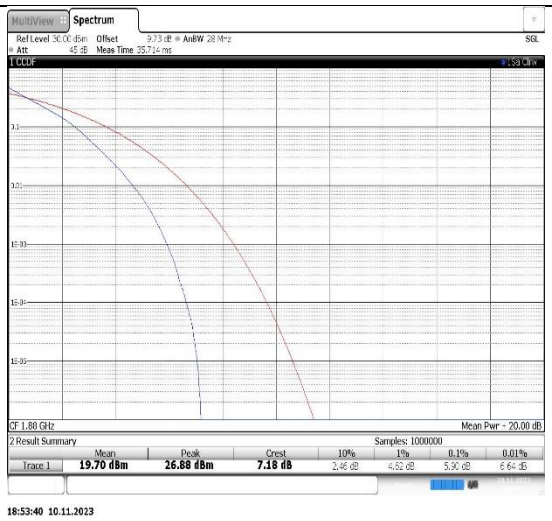

Band2-10MHz-QPSK-18900-50RB#0

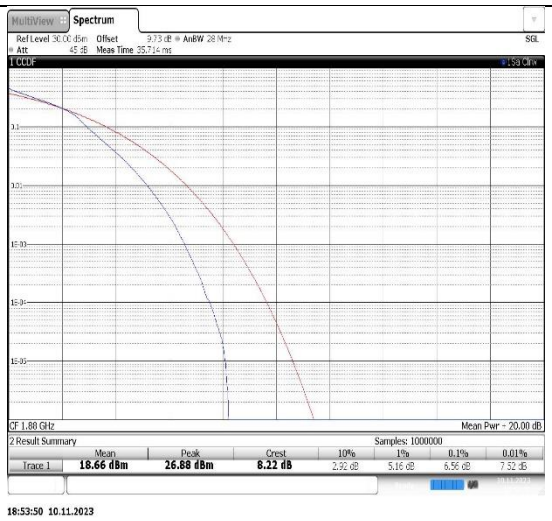

Band2-10MHz-16QAM-18900-50RB#0

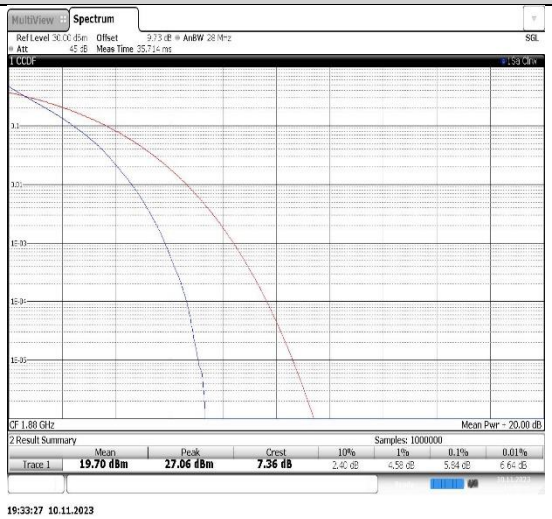

Band2-15MHz-QPSK-18900-75RB#0

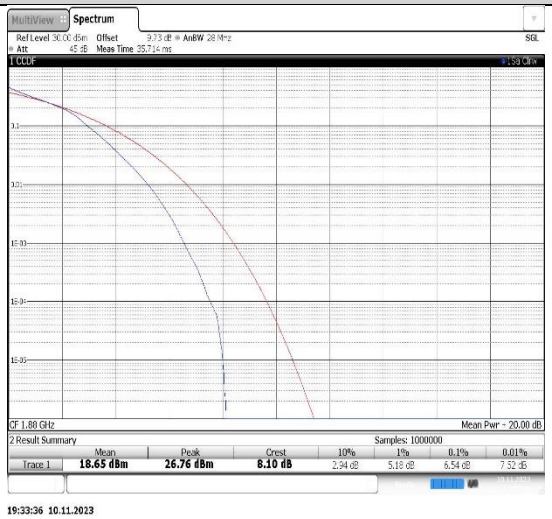

Band2-15MHz-16QAM-18900-75RB#0

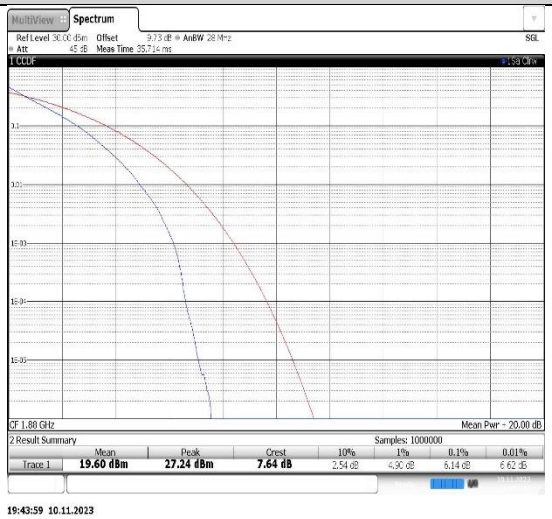

Band2-20MHz-QPSK-18900-100RB#0

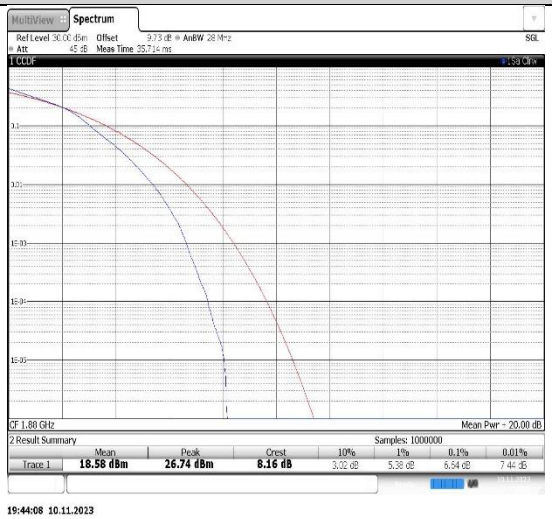

Band2-20MHz-16QAM-18900-100RB#0

This report shall not be reproduced except in full, without the written approval of UL Verification Services (Guangzhou) Co., Ltd, Song Shan Lake Branch

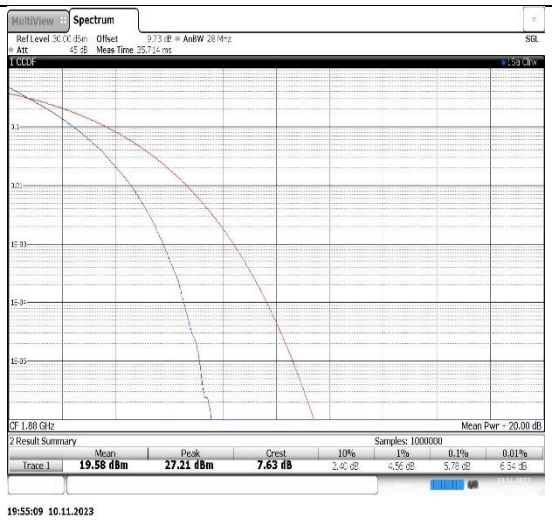

Band4-1.4MHz-QPSK-20175-6RB#0

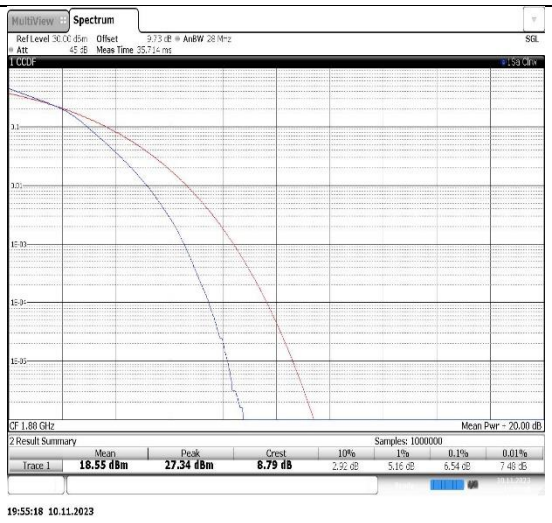

Band4-1.4MHz-16QAM-20175-6RB#0

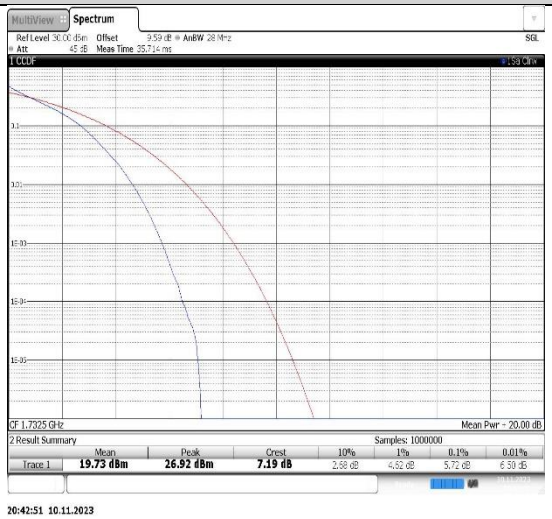

Band4-3MHz-QPSK-20175-15RB#0

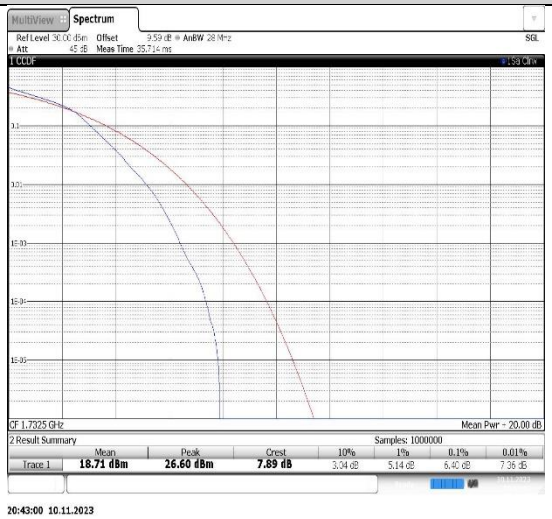

Band4-3MHz-16QAM-20175-15RB#0

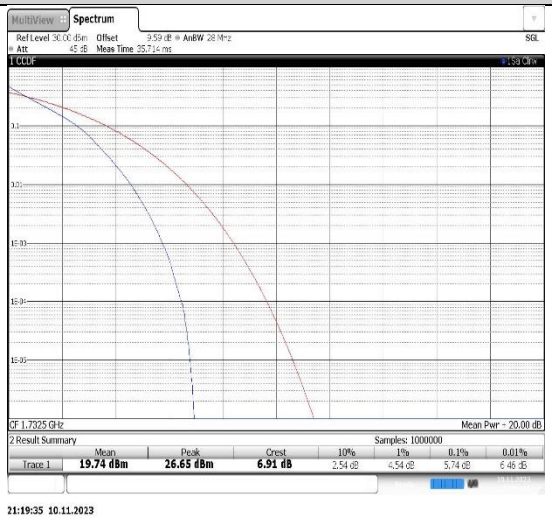

Band4-5MHz-QPSK-20175-25RB#0

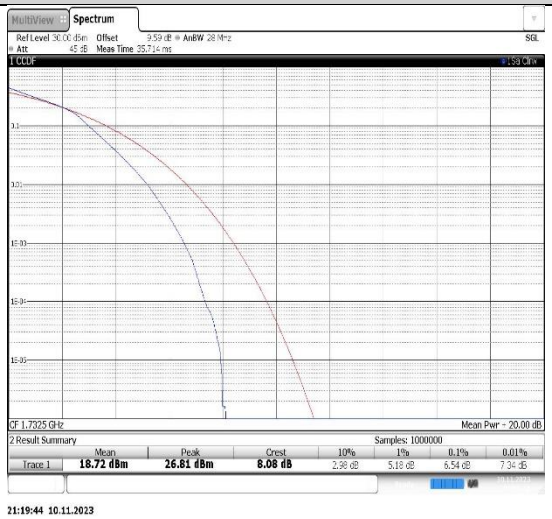

Band4-5MHz-16QAM-20175-25RB#0

This report shall not be reproduced except in full, without the written approval of UL Verification Services (Guangzhou) Co., Ltd, Song Shan Lake Branch

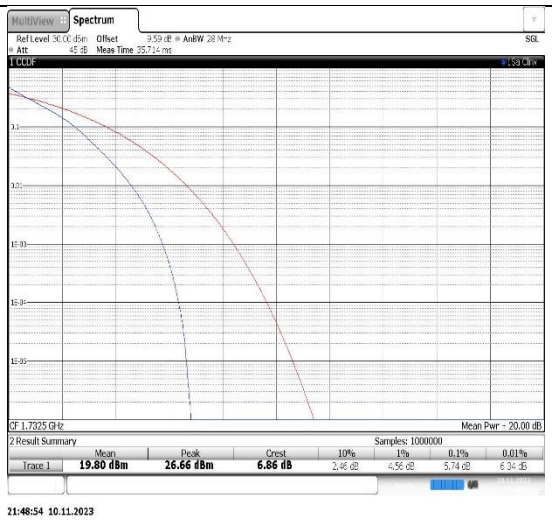

Band4-10MHz-QPSK-20175-50RB#0

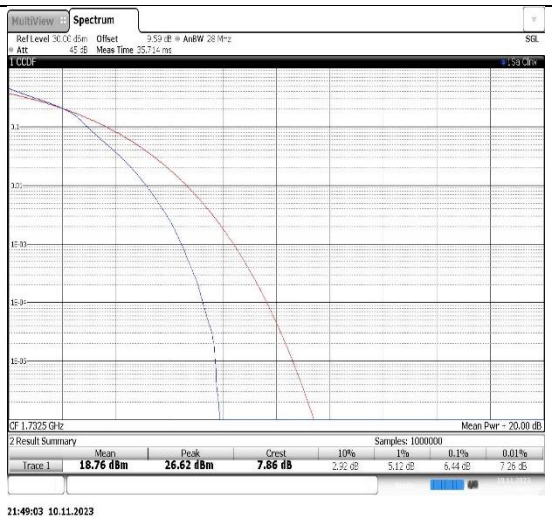

Band4-10MHz-16QAM-20175-50RB#0

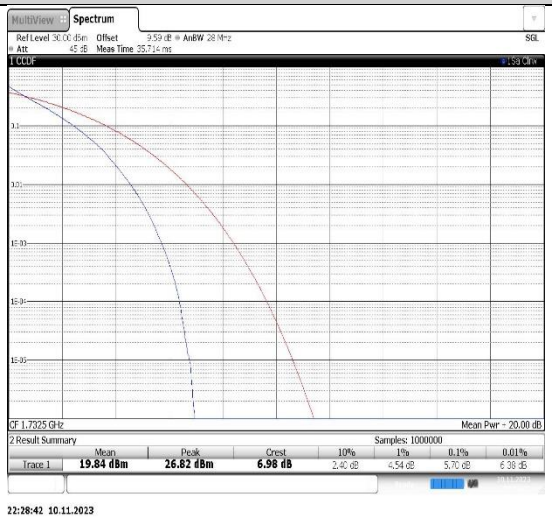

Band4-15MHz-QPSK-20175-75RB#0

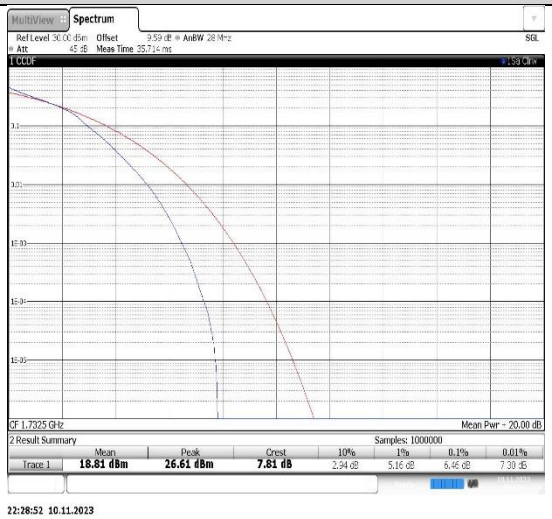

Band4-15MHz-16QAM-20175-75RB#0

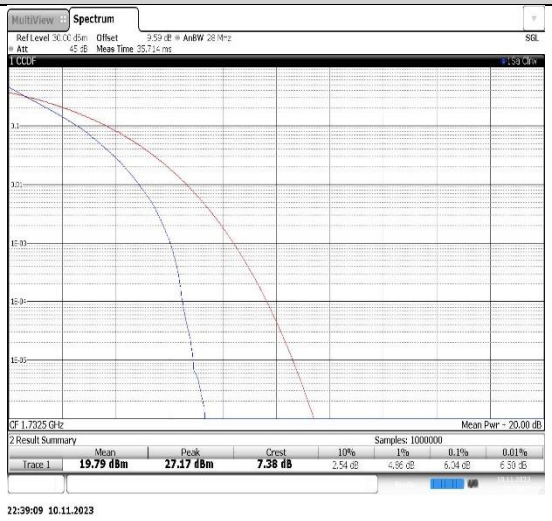

Band4-20MHz-QPSK-20175-100RB#0

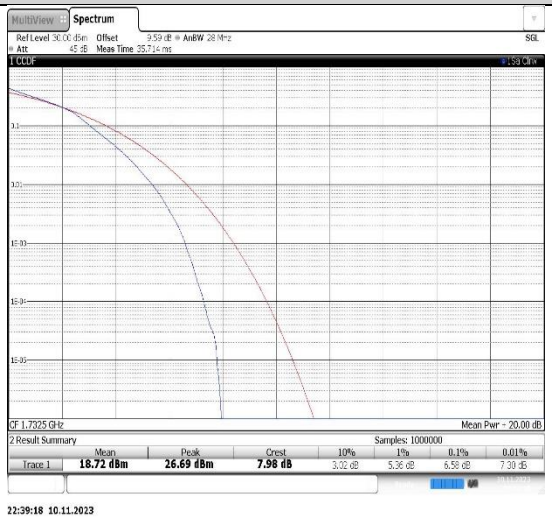

Band4-20MHz-16QAM-20175-100RB#0

This report shall not be reproduced except in full, without the written approval of UL Verification Services (Guangzhou) Co., Ltd, Song Shan Lake Branch

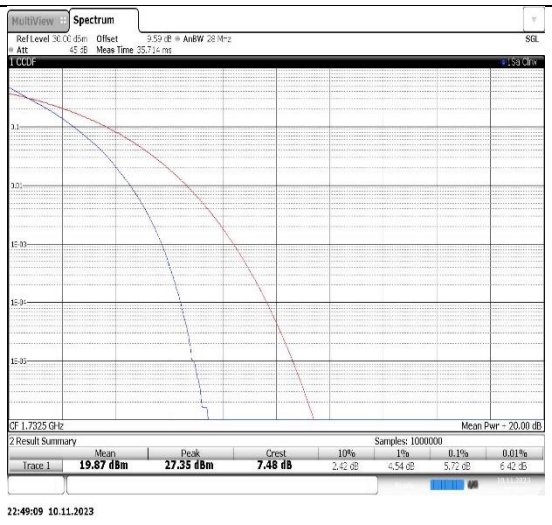

Band5-1.4MHz-QPSK-20525-6RB#0

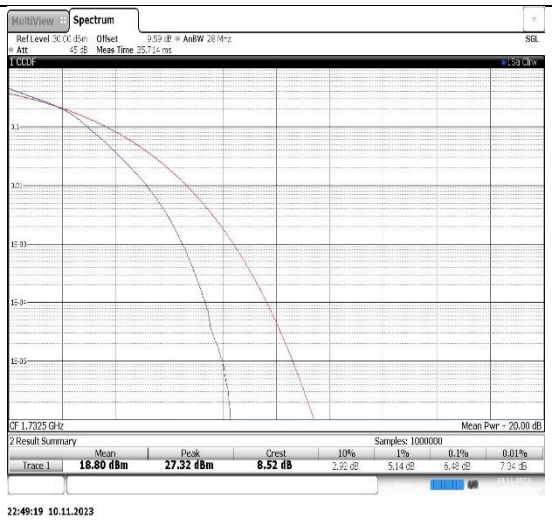

Band5-1.4MHz-16QAM-20525-6RB#0

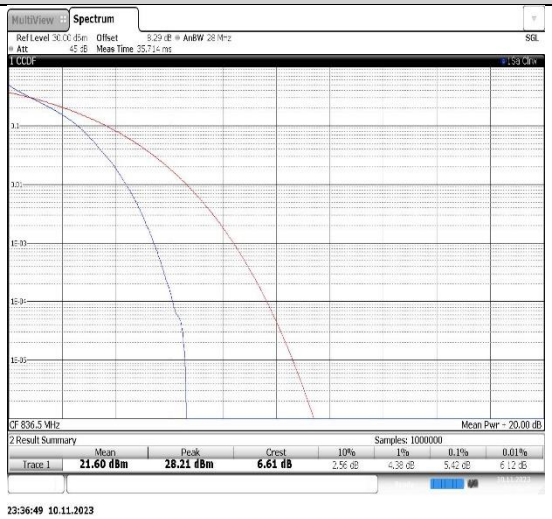

Band5-3MHz-QPSK-20525-15RB#0

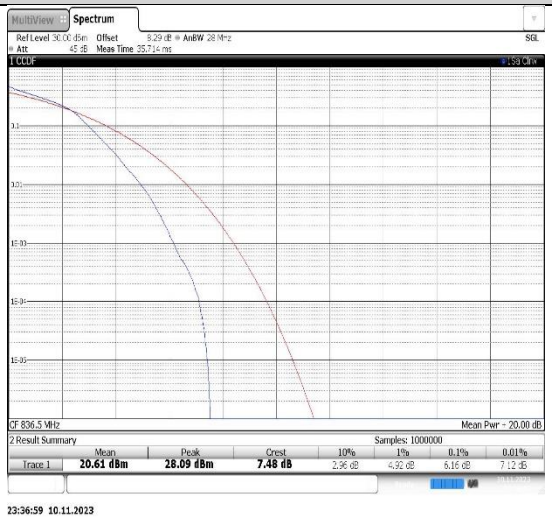

Band5-3MHz-16QAM-20525-15RB#0

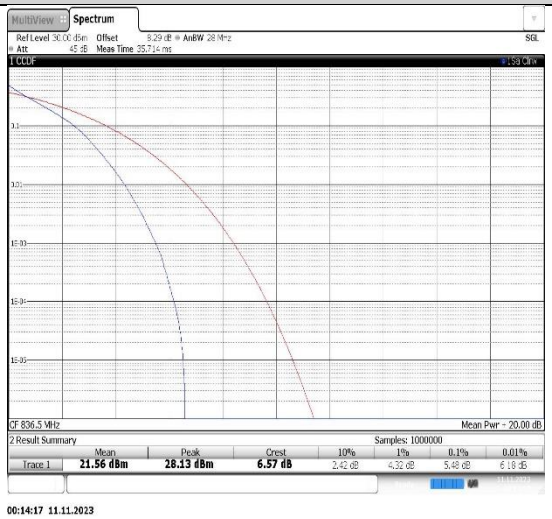

Band5-5MHz-QPSK-20525-25RB#0

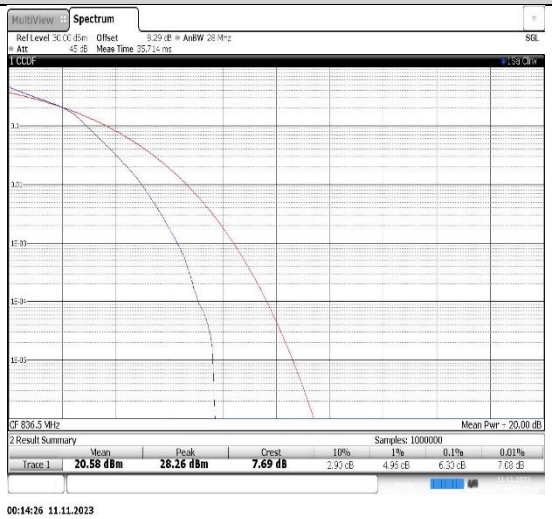

Band5-5MHz-16QAM-20525-25RB#0

This report shall not be reproduced except in full, without the written approval of UL Verification Services (Guangzhou) Co., Ltd, Song Shan Lake Branch

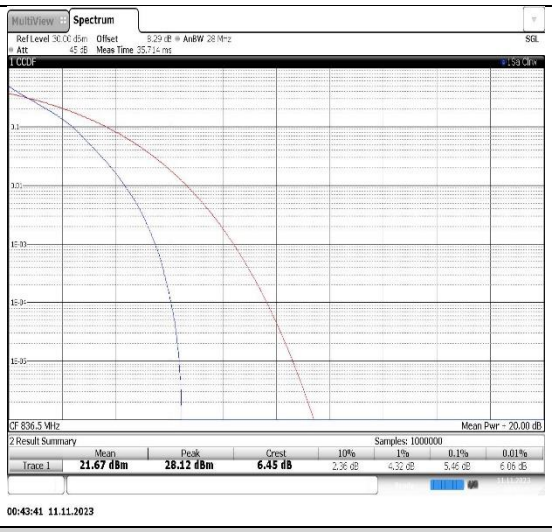

Band5-10MHz-QPSK-20525-50RB#0

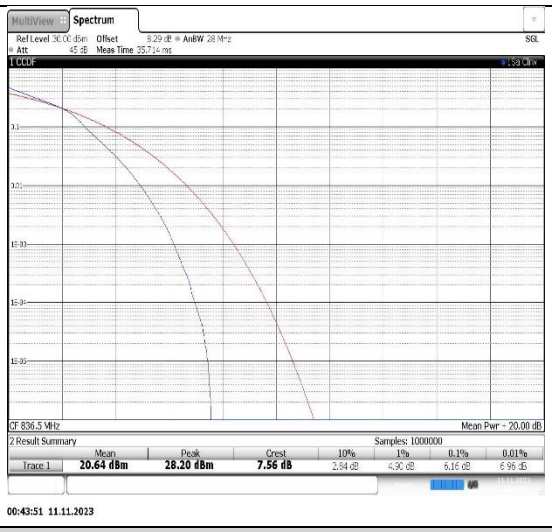

Band5-10MHz-16QAM-20525-50RB#0

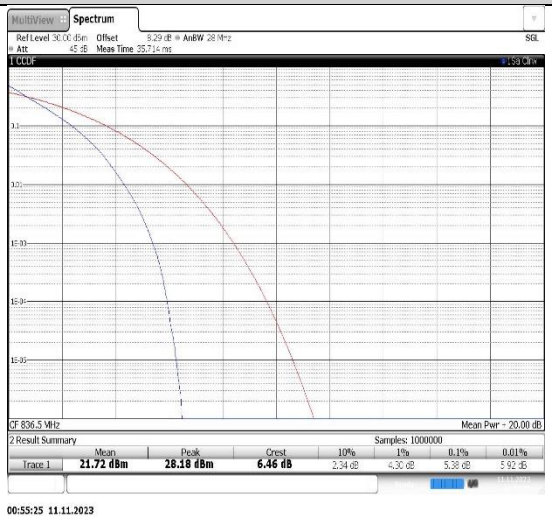

Band7-5MHz-QPSK-21100-25RB#0

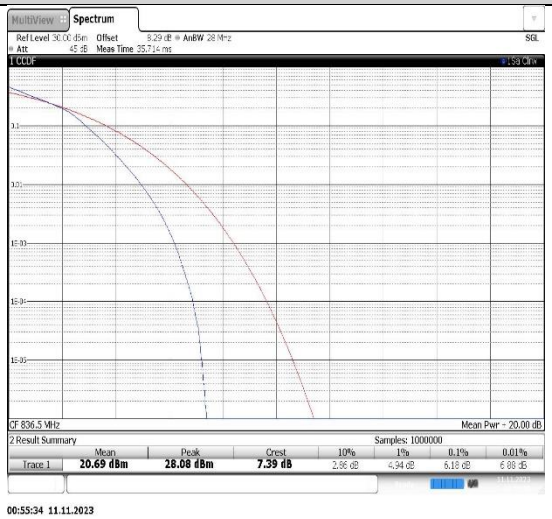

Band7-5MHz-16QAM-21100-25RB#0

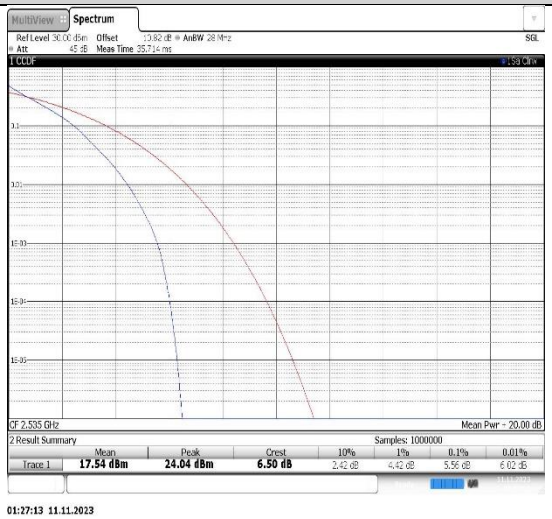

Band7-10MHz-QPSK-21100-50RB#0

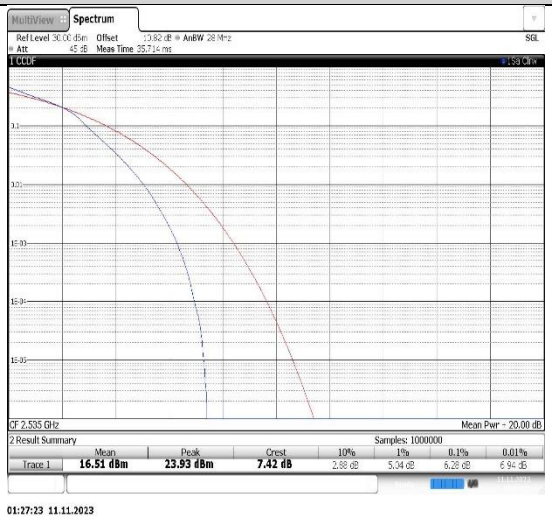

Band7-10MHz-16QAM-21100-50RB#0

This report shall not be reproduced except in full, without the written approval of UL Verification Services (Guangzhou) Co., Ltd, Song Shan Lake Branch