CFR 47 FCC PART 2
CFR 47 FCC PART 22 H
CFR 47 FCC PART 24 E
CFR 47 FCC PART 27
CFR 47 FCC PART 90S

TEST REPORT

For

5G Smart Phone

MODEL NUMBER: S6702X

REPORT NUMBER: 4791041023-1-RF-9

ISSUE DATE: Jan. 15, 2024

FCC ID:2ADINS6702X

Prepared for

Sun Cupid Technology (HK) Ltd.
16/F, CEO Tower, 77 Wing Hong St, Cheung Sha Wan, Kowloon Hong Kong

Prepared by

UL Verification Services (Guangzhou) Co., Ltd, Song Shan Lake Branch
Building 10, Innovation Technology Park, No. 1, Li Bin Road, Song Shan Lake Hi-Tech Development Zone Dongguan, 523808, People's Republic of China

Tel: +86 769 22038881
Fax: +86 769 33244054
Website: www.ul.com

The results reported herein have been performed in accordance with the laboratory's terms of accreditation. This report shall not be reproduced except in full without the written approval of the Laboratory. The results in this report apply to the test sample(s) mentioned above at the time of the testing period only and are not to be used to indicate applicability to other similar products.

Revision History

Rev.	Issue Date	Revisions	Revised By
V0	Jan. 15, 2024	Initial Issue	\

Note:
1.This test report is only published to and used by the applicant, and it is not for evidence purpose in China.
2. The measurement result for the sample received is <Pass> according to < CFR 47 FCC PART 22 H >< CFR 47 FCC PART 24 E>< CFR 47 FCC PART 27 >< CFR 47 FCC PART 90S > when < Simple Acceptance > decision rule is applied.

This report shall not be reproduced except in full, without the written approval of UL Verification Services (Guangzhou) Co., Ltd, Song Shan Lake Branch

TABLE OF CONTENTS

1. ATTESTATION OF TEST RESULTS 5

2. TEST METHODOLOGY 7

3. FACILITIES AND ACCREDITATION 7

4. CALIBRATION AND UNCERTAINTY 8

4.1. MEASURING INSTRUMENT CALIBRATION 8

4.2. MEASUREMENT UNCERTAINTY 8

5. EQUIPMENT UNDER TEST 9

5.1. DESCRIPTION OF EUT 9

5.2. TEST CHANNEL CONFIGURATION 10

5.2.1. Reference test frequencies for NR operating band n2 10
5.2.2. Reference test frequencies for NR operating band n5 11
5.2.3. Reference test frequencies for NR operating band n7 12
5.2.4. Reference test frequencies for NR operating band n25 13
5.2.5. Reference test frequencies for NR operating band n41 14
5.2.6. Reference test frequencies for NR operating band n66 15
5.2.7. Reference test frequencies for NR operating band n71 16
5.2.8. Reference test frequencies for NR operating band n77 (Block A) 17
5.2.9. Reference test frequencies for NR operating band n77 (Block C) 18

5.3. MAXIMUM AVERAGE OUTPUT POWER 19

5.3.1. NR n2 19
5.3.2. NR n5 19
5.3.3. NR n7 20
5.3.4. NR n25 20
5.3.5. NR n41 21
5.3.6. NR n66 22
5.3.7. NR n71 23
5.3.8. NR n77 (3450-3550 MHz) 24
5.3.9. NR n77 (3700-3980 MHz) 26

5.4. WORST-CASE CONFIGURATION AND MODE 28

5.5. DESCRIPTION OF AVAILABLE ANTENNAS 29

5.6. DESCRIPTION OF TEST SETUP 30

6. MEASURING INSTRUMENT AND SOFTWARE USED 31

7. ANTENNA TERMINAL TEST RESULTS 32

7.1. EFFECTIVE (ISOTROPIC) RADIATED POWER OF TRANSMITTER 32

7.2. PEAK TO AVERAGE RADIO 34

7.3. OCCUPIED BANDWIDTH 35

7.4. BAND EDGE EMISSIONS 36

This report shall not be reproduced except in full, without the written approval of UL Verification Services (Guangzhou) Co., Ltd, Song Shan Lake Branch

7.5. SPURIOUS EMISSION AT ANTENNA TERMINAL.....38

7.6. FREQUENCY STABILITY.....40

8. APPENDIX 41

8.1. Appendix A: Effective (Isotropic) Radiated Power Output Data 41

8.1.1. NR n2 41
8.1.2. NR n5 43
8.1.3. NR n7 45
8.1.4. NR n25 47
8.1.5. NR n41 49
8.1.6. NR n66 52
8.1.8. NR n71 54
8.1.9. NR n77 (3450-3550 MHz) 56
8.1.10. NR n77 (3700-3980 MHz) 60

9. RADIATED SPURIOUS EMISSIONS 65

9.1.1. NR n2 68
9.1.2. NR n5 70
9.1.3. NR n7 72
9.1.4. NR n25 74
9.1.5. NR n41 76
9.1.6. NR n66 78
9.1.7. NR n71 80
9.1.8. NR n77 (3450-3550 MHz) 82
9.1.9. NR n77 (3700-3980 MHz) 83
9.1.10. DC_2A_n41A 85
9.1.11. DC_66A_n41A 86

This report shall not be reproduced except in full, without the written approval of UL Verification Services (Guangzhou) Co., Ltd, Song Shan Lake Branch

1. ATTESTATION OF TEST RESULTS

Applicant Information

Company Name:	Sun Cupid Technology (HK) Ltd.
Address:	16/F, CEO Tower, 77 Wing Hong St, Cheung Sha Wan, Kowloon Hong Kong

Manufacturer Information

Company Name:	Sun Cupid Technology (HK) Ltd.
Address:	16/F, CEO Tower, 77 Wing Hong St, Cheung Sha Wan, Kowloon Hong Kong

EUT Information

EUT Name:	5G Smart Phone
Model:	S6702X
Series Model:	B30 Pro, NUU B30 Pro
Brand:	NUU
Sample Received Date:	October 26, 2023
Sample Status:	Normal
Sample ID:	6616020
Date of Tested:	Oct. 26, 2023 to Jan. 14, 2024

APPLICABLE STANDARDS	
STANDARD	**TEST RESULTS**
CFR 47 FCC PART 22 H	PASS
CFR 47 FCC PART 24 E	PASS
CFR 47 FCC PART 27	PASS
CFR 47 FCC PART 90S	PASS

This report shall not be reproduced except in full, without the written approval of UL Verification Services (Guangzhou) Co., Ltd, Song Shan Lake Branch

Prepared By:

James Qin
Project Engineer

Checked By:

Denny Huang
Senior Project Engineer

Approved By:

Stephen Guo
Operations Manager

This report shall not be reproduced except in full, without the written approval of UL Verification Services (Guangzhou) Co., Ltd, Song Shan Lake Branch

2. TEST METHODOLOGY

The tests documented in this report were performed in accordance with ANSI C63.26-2015, 971168 D01 Power Meas License Digital Systems v03r01, 971168 D02 Misc Rev Approv License Devices v02r01, 412172 D01 v01r01 Determining ERP and EIRP, CFR 47 FCC Part 2, Part 22 H, Part 24 E, Part 27, Part 90S.

3. FACILITIES AND ACCREDITATION

Accreditation Certificate	**A2LA (Certificate No.: 4102.01)** UL Verification Services (Guangzhou) Co., Ltd. Song Shan Lake Branch. has been assessed and proved to be in compliance with A2LA. **FCC (FCC Designation No.: CN1187)** UL Verification Services (Guangzhou) Co., Ltd. Song Shan Lake Branch. Has been recognized to perform compliance testing on equipment subject to the Commission's Delcaration of Conformity (DoC) and Certification rules **ISED (Company No.: 21320)** UL Verification Services (Guangzhou) Co., Ltd. Song Shan Lake Branch. has been registered and fully described in a report filed with ISED. The Company Number is 21320 and the test lab Conformity Assessment Body Identifier (CABID) is CN0046. **VCCI (Registration No.: G-20192, C-20153, T-20155 and R-20202)** UL Verification Services (Guangzhou) Co., Ltd. Song Shan Lake Branch. has been assessed and proved to be in compliance with VCCI, the Membership No. is 3793. Facility Name: Chamber D, the VCCI registration No. is G-20192 and R-20202. Shielding Room B, the VCCI registration No. is C-20153 and T-20155.

Note 1: All tests measurement facilities use to collect the measurement data are located at Building 10, Innovation Technology Park, Song Shan Lake Hi tech Development Zone, Dongguan, 523808, China

Note 2: The test anechoic chamber in UL Verification Services (Guangzhou) Co., Ltd. Song Shan Lake Branch had been calibrated and compared to the open field sites and the test anechoic chamber is shown to be equivalent to or worst case from the open field site.

Note 3: For below 30 MHz, lab had performed measurements at test anechoic chamber and comparing to measurements obtained on an open field site. And these measurements below 30 MHz had been correlated to measurements performed on an OFS.

This report shall not be reproduced except in full, without the written approval of UL Verification Services (Guangzhou) Co., Ltd, Song Shan Lake Branch

4. CALIBRATION AND UNCERTAINTY

4.1. MEASURING INSTRUMENT CALIBRATION

The measuring equipment utilized to perform the tests documented in this report has been calibrated in accordance with the manufacturer's recommendations and is traceable to recognize national standards.

4.2. MEASUREMENT UNCERTAINTY

Where relevant, the following measurement uncertainty levels have been estimated for tests performed on the apparatus:

Test Item	Uncertainty
Conduction emission	3.62 dB
Radiated Emission (Included Fundamental Emission) (9 kHz ~ 30 MHz)	2.2 dB
Radiated Emission (Included Fundamental Emission) (30 MHz ~ 1 GHz)	4.00 dB
Radiated Emission (Included Fundamental Emission) (1 GHz to 40 GHz)	5.78 dB (1 GHz-18 GHz)
	5.23dB (18 GHz-26 GHz)
	5.64 dB (26 GHz-40 GHz)
Bandwidth	1.1 %
Note: This uncertainty represents an expanded uncertainty expressed at approximately the 95 % confidence level using a coverage factor of k=2.	

This report shall not be reproduced except in full, without the written approval of UL Verification Services (Guangzhou) Co., Ltd, Song Shan Lake Branch

5. EQUIPMENT UNDER TEST

5.1. DESCRIPTION OF EUT

EUT Name:	5G Smart Phone
Model:	S6702X
Series Model:	B30 Pro, NUU B30 Pro
Model Difference:	B30 Pro, NUU B30 Pro have the same technical construction including circuit diagram, PCB Layout, components and component layout, all electrical construction and mechanical construction with S6702X. The difference lies only the model number. all these changes do not degrade the unwanted emissions of the certified product.

This report shall not be reproduced except in full, without the written approval of UL Verification Services (Guangzhou) Co., Ltd, Song Shan Lake Branch

5.2. TEST CHANNEL CONFIGURATION

General note: when the box in the leftmost column marked with "√" means the corresponding bandwidth is supported, otherwise, it is not supported.

5.2.1. Reference test frequencies for NR operating band n2

Test frequencies for NR operating band n2 and SCS 15 kHz

Supported Bandwidth	CBW [MHz]	Range		Carrier centre [MHz]	Carrier centre [ARFCN]
☑	5	Downlink	Low	1932.5	386500
			Mid	1960	392000
			High	1987.5	397500
		Uplink	Low	1852.5	370500
			Mid	1880	376000
			High	1907.5	381500
☑	10	Downlink	Low	1935	387000
			Mid	1960	392000
			High	1985	397000
		Uplink	Low	1855	371000
			Mid	1880	376000
			High	1905	381000
☑	15	Downlink	Low	1937.5	387500
			Mid	1960	392000
			High	1982.5	396500
		Uplink	Low	1857.5	371500
			Mid	1880	376000
			High	1902.5	380500
☑	20	Downlink	Low	1940	388000
			Mid	1960	392000
			High	1980	396000
		Uplink	Low	1860	372000
			Mid	1880	376000
			High	1900	380000

This report shall not be reproduced except in full, without the written approval of UL Verification Services (Guangzhou) Co., Ltd, Song Shan Lake Branch

5.2.2. Reference test frequencies for NR operating band n5

Test frequencies for NR operating band n5 and SCS 15 kHz

Supported Bandwidth	**CBW [MHz]**	**Range**		**Carrier centre [MHz]**	**Carrier centre [ARFCN]**
☑	5	Downlink	Low	871.5	174300
			Mid	881.5	176300
			High	891.5	178300
		Uplink	Low	826.5	165300
			Mid	836.5	167300
			High	846.5	169300
☑	10	Downlink	Low	874	174800
			Mid	881.5	176300
			High	889	177800
		Uplink	Low	829	165800
			Mid	836.5	167300
			High	844	168800
☑	15	Downlink	Low	876.5	175300
			Mid	881.5	176300
			High	886.5	177300
		Uplink	Low	831.5	166300
			Mid	836.5	167300
			High	841.5	168300
☑	20	Downlink	Low	879	175800
			Mid	881.5	176300
			High	884	176800
		Uplink	Low	834	166800
			Mid	836.5	167300
			High	839	167800

This report shall not be reproduced except in full, without the written approval of UL Verification Services (Guangzhou) Co., Ltd, Song Shan Lake Branch

5.2.3. Reference test frequencies for NR operating band n7

Test frequencies for NR operating band n7 and SCS 15 kHz

Supported Bandwidth	CBW [MHz]	Range		Carrier centre [MHz]	Carrier centre [ARFCN]
☑	5	Downlink	Low	2622.5	524500
			Mid	2655	531000
			High	2687.5	537500
		Uplink	Low	2502.5	500500
			Mid	2535	507000
			High	2567.5	513500
☑	10	Downlink	Low	2625	525000
			Mid	2655	531000
			High	2685	537000
		Uplink	Low	2505	501000
			Mid	2535	507000
			High	2565	513000
☑	15	Downlink	Low	2627.5	525500
			Mid	2655	531000
			High	2682.5	536500
		Uplink	Low	2507.5	501500
			Mid	2535	507000
			High	2562.5	512500
☑	20	Downlink	Low	2630	526000
			Mid	2655	531000
			High	2680	536000
		Uplink	Low	2510	502000
			Mid	2535	507000
			High	2560	512000

This report shall not be reproduced except in full, without the written approval of UL Verification Services (Guangzhou) Co., Ltd, Song Shan Lake Branch

5.2.4. Reference test frequencies for NR operating band n25

Test frequencies for NR operating band n25 and SCS 15 kHz

Supported Bandwidth	CBW [MHz]	Range		Carrier centre [MHz]	Carrier centre [ARFCN]
☑	5	Downlink	Low	1932.5	386500
			Mid	1962.5	392500
			High	1992.5	398500
		Uplink	Low	1852.5	370500
			Mid	1882.5	376500
			High	1912.5	382500
☑	10	Downlink	Low	1935	387000
			Mid	1962.5	392500
			High	1990	398000
		Uplink	Low	1855	371000
			Mid	1882.5	376500
			High	1910	382000
☑	15	Downlink	Low	1937.5	387500
			Mid	1962.5	392500
			High	1987.5	397500
		Uplink	Low	1857.5	371500
			Mid	1882.5	376500
			High	1907.5	381500
☑	20	Downlink	Low	1940	388000
			Mid	1962.5	392500
			High	1985	397000
		Uplink	Low	1860	372000
			Mid	1882.5	376500
			High	1905	381000

This report shall not be reproduced except in full, without the written approval of UL Verification Services (Guangzhou) Co., Ltd, Song Shan Lake Branch

5.2.5. Reference test frequencies for NR operating band n41

Test frequencies for NR operating band n41 and SCS 30 kHz

Supported Bandwidth	Bandwidth [MHz]	Range		Carrier centre [MHz]	Carrier centre [ARFCN]
☑	10	Downlink & Uplink	Low	2501.01	500202
			Mid	2592.99	518598
			High	2685	537000
☑	15	Downlink & Uplink	Low	2503.5	500700
			Mid	2592.99	518598
			High	2682.48	536496
☑	20	Downlink & Uplink	Low	2506.02	501204
			Mid	2592.99	518598
			High	2679.99	535998
☑	30	Downlink & Uplink	Low	2511	502200
			Mid	2592.99	518598
			High	2674.98	534996
☑	40	Downlink & Uplink	Low	2516.01	503202
			Mid	2592.99	518598
			High	2670	534000
☑	50	Downlink & Uplink	Low	2521.02	504204
			Mid	2592.99	518598
			High	2664.99	532998
☑	60	Downlink & Uplink	Low	2526	505200
			Mid	2592.99	518598
			High	2659.98	531996
☑	70	Downlink & Uplink	Low	2536.02	507204
			Mid	2592.99	518598
			High	2649.99	529998
☑	80	Downlink & Uplink	Low	2536.02	507204
			Mid	2592.99	518598
			High	2649.99	529998
☑	90	Downlink & Uplink	Low	2541	508200
			Mid	2592.99	518598
			High	2644.98	528996
☑	100	Downlink & Uplink	Low	2546.01	509202
			Mid	2592.99	518598
			High	2640	528000

This report shall not be reproduced except in full, without the written approval of UL Verification Services (Guangzhou) Co., Ltd, Song Shan Lake Branch

5.2.6. Reference test frequencies for NR operating band n66

Test frequencies for NR operating band n66 and SCS 15 kHz

Supported Bandwidth	CBW [MHz]	Range		Carrier centre [MHz]	Carrier centre [ARFCN]
☑	5	Downlink	Low	2112.5	422500
			Mid	2145	429000
			High	2177.5	435500
		Uplink	Low	1712.5	342500
			Mid	1745	349000
			High	1777.5	355500
☑	10	Downlink	Low	2115	423000
			Mid	2145	429000
			High	2175	435000
		Uplink	Low	1715	343000
			Mid	1745	349000
			High	1775	355000
☑	15	Downlink	Low	2117.5	423500
			Mid	2145	429000
			High	2172.5	434500
		Uplink	Low	1717.5	343500
			Mid	1745	349000
			High	1772.5	354500
☑	20	Downlink	Low	2120	424000
			Mid	2145	429000
			High	2170	434000
		Uplink	Low	1720	344000
			Mid	1745	349000
			High	1770	354000
☑	25	Downlink	Low	2122.5	424500
			Mid	2145	429000
			High	2167.5	433500
		Uplink	Low	1722.5	344500
			Mid	1745	349000
			High	1767.5	353500
☑	30	Downlink	Low	2125	425000
			Mid	2145	429000
			High	2165	433000
		Uplink	Low	1725	345000
			Mid	1745	349000
			High	1765	353000
☑	40	Downlink	Low	2130	426000
			Mid	2145	429000
			High	2160	432000
		Uplink	Low	1730	346000
			Mid	1745	349000
			High	1760	352000
☐	45	Downlink	Low	2132.5	426500
			Mid	2145	429000
			High	2157.5	431500
		Uplink	Low	1732.5	346500
			Mid	1745	349000
			High	1757.5	351500

This report shall not be reproduced except in full, without the written approval of UL Verification Services (Guangzhou) Co., Ltd, Song Shan Lake Branch

5.2.7. Reference test frequencies for NR operating band n71

Test frequencies for NR operating band n71 and SCS 15 kHz

Supported Bandwidth	CBW [MHz]	Range		Carrier centre [MHz]	Carrier centre [ARFCN]
☑	5	Downlink	Low	619.5	123900
			Mid	634.5	126900
			High	649.5	129900
		Uplink	Low	665.5	133100
			Mid	680.5	136100
			High	695.5	139100
☑	10	Downlink	Low	622	124400
			Mid	634.5	126900
			High	647	129400
		Uplink	Low	668	133600
			Mid	680.5	136100
			High	693	138600
☑	15	Downlink	Low	624.5	124900
			Mid	634.5	126900
			High	644.5	128900
		Uplink	Low	670.5	134100
			Mid	680.5	136100
			High	690.5	138100
☑	20	Downlink	Low	627	125400
			Mid	634.5	126900
			High	642	128400
		Uplink	Low	673	134600
			Mid	680.5	136100
			High	688	137600

This report shall not be reproduced except in full, without the written approval of UL Verification Services (Guangzhou) Co., Ltd, Song Shan Lake Branch

5.2.8. Reference test frequencies for NR operating band n77 (Block A)

Test frequencies for NR operating band n77 and SCS 30 kHz

Supported Bandwidth	CBW [MHz]	Range		Carrier centre [MHz]	Carrier centre [ARFCN]
☑	10	Downlink & Uplink	Low	3455.01	630334
			Mid	3500.01	633334
			High	3545.01	636334
☑	15	Downlink & Uplink	Low	3457.5	630500
			Mid	3500.01	633334
			High	3542.49	636166
☑	20	Downlink & Uplink	Low	3460.02	630668
			Mid	3500.01	633334
			High	3540	636000
☑	25	Downlink & Uplink	Low	3462.5	630834
			Mid	3500.01	633334
			High	2542.5	635833
☑	30	Downlink & Uplink	Low	3465	631000
			Mid	3500.01	633334
			High	3534.99	635666
☑	40	Downlink & Uplink	Low	3470.01	631334
			Mid	3500.01	633334
			High	3530.01	635334
☑	50	Downlink & Uplink	Low	3475.02	631668
			Mid	3500.01	633334
			High	3525	635000
☑	60	Downlink & Uplink	Low	3480	632000
			Mid	3500.01	633334
			High	3519.99	634666
☑	70	Downlink & Uplink	Low	3485.01	632334
			Mid	3500.01	633334
			High	3515.01	634334
☑	80	Downlink & Uplink	Low	3490.02	632668
			Mid	3500.01	633334
			High	3510	634000
☑	90	Downlink & Uplink	Low	3495	633000
			Mid	3500.01	633334
			High	3504.99	633666
☑	100	Downlink & Uplink	Low	\	\
			Mid	3500.01	633334
			High	\	\

This report shall not be reproduced except in full, without the written approval of UL Verification Services (Guangzhou) Co., Ltd, Song Shan Lake Branch

5.2.9. Reference test frequencies for NR operating band n77 (Block C)

Test frequencies for NR operating band n77 and SCS 30 kHz

	CBW [MHz]	Range		Carrier centre [MHz]	Carrier centre [ARFCN]
☑	10	Downlink & Uplink	Low	3705	647000
			Mid	3840	656000
			High	3975	665000
☑	15	Downlink & Uplink	Low	3707.52	647168
			Mid	3840	656000
			High	3972.48	664832
☑	20	Downlink & Uplink	Low	3710.01	647334
			Mid	3840	656000
			High	3969.99	664666
☑	25	Downlink & Uplink	Low	3712.5	647500
			Mid	3840	656000
			High	3967.5	664500
☑	30	Downlink & Uplink	Low	3714.99	647666
			Mid	3840	656000
			High	3965.01	664334
☑	40	Downlink & Uplink	Low	3720	648000
			Mid	3840	656000
			High	3960	664000
☑	50	Downlink & Uplink	Low	3725.01	648334
			Mid	3840	656000
			High	3954.99	663666
☑	60	Downlink & Uplink	Low	3730.02	648668
			Mid	3840	656000
			High	3949.98	663332
☑	70	Downlink & Uplink	Low	3735	649000
			Mid	3840	656000
			High	3945	663000
☑	80	Downlink & Uplink	Low	3740.01	649334
			Mid	3840	656000
			High	3939.99	662666
☑	90	Downlink & Uplink	Low	3745.02	649668
			Mid	3840	656000
			High	3934.98	662332
☑	100	Downlink & Uplink	Low	3750	650000
			Mid	3840	656000
			High	3930	662000

This report shall not be reproduced except in full, without the written approval of UL Verification Services (Guangzhou) Co., Ltd, Song Shan Lake Branch

5.3. MAXIMUM AVERAGE OUTPUT POWER

5.3.1. NR n2

Part 24							
EIRP Limit(W)		2.0					
Antenna Gain (dBi)		-0.9					
Bandwidth (MHz)	Modulation	Low Frequency (MHz)	Upper Frequency (MHz)	Conducted Average (dBm)	EIRP Average (W)	99% OBW (MHz)	Emission Designator
5	BPSK	1852.5	1907.5	22.69	0.151	4.481	4M48G7W
	QPSK			22.61	0.148	4.481	4M48G7W
	16QAM			20.79	0.097	4.476	4M48D7W
10	BPSK	1855	1905	22.40	0.141	8.941	8M94G7W
	QPSK			22.39	0.141	9.288	9M29G7W
	16QAM			20.50	0.091	9.295	9M30D7W
15	BPSK	1857.5	1902.5	22.45	0.143	13.459	13M5G7W
	QPSK			22.51	0.145	14.160	14M2G7W
	16QAM			20.73	0.096	14.127	14M1D7W
20	BPSK	1860	1900	22.53	0.146	17.937	17M9G7W
	QPSK			22.52	0.145	18.954	19M0G7W
	16QAM			20.59	0.093	18.899	18M9D7W

5.3.2. NR n5

Part 22H							
ERP Limit(W)		7.0					
Antenna Gain (dBi)		-3.9					
Bandwidth (MHz)	Modulation	Low Frequency (MHz)	Upper Frequency (MHz)	Conducted Average (dBm)	ERP Average (W)	99% OBW (MHz)	Emission Designator
5	BPSK	826.5	846.5	24.21	0.107	4.484	4M48G7W
	QPSK			24.24	0.108	4.476	4M48G7W
	16QAM			22.08	0.066	4.481	4M48D7W
10	BPSK	829	844	23.84	0.099	8.957	8M96G7W
	QPSK			23.88	0.100	9.304	9M30G7W
	16QAM			22.02	0.065	9.316	9M32D7W
15	BPSK	831.5	841.5	24.02	0.103	13.446	13M4G7W
	QPSK			24.02	0.103	14.195	14M2G7W
	16QAM			21.95	0.064	14.178	14M4D7W
20	BPSK	834	839	24.03	0.103	17.891	17M9G7W
	QPSK			24.06	0.104	18.910	18M9G7W
	16QAM			21.82	0.062	18.923	18M9D7W

This report shall not be reproduced except in full, without the written approval of UL Verification Services (Guangzhou) Co., Ltd, Song Shan Lake Branch

5.3.3. NR n7

Part 27							
EIRP Limit(W)		2.0					
Antenna Gain (dBi)		-0.5					
Bandwidth (MHz)	Modulation	Low Frequency (MHz)	Upper Frequency (MHz)	Conducted Average (dBm)	EIRP Average (W)	99% OBW (MHz)	Emission Designator
5	BPSK	2502.5	2567.5	20.98	0.112	4.476	4M48G7W
	QPSK			21.41	0.123	4.486	4M49G7W
	16QAM			18.89	0.069	4.486	4M49D7W
10	BPSK	2505	2565	20.88	0.109	8.942	8M94G7W
	QPSK			21.14	0.116	9.278	9M30G7W
	16QAM			18.77	0.067	9.291	9M30D7W
15	BPSK	2507.5	2562.5	20.96	0.111	13.419	13M4G7W
	QPSK			21.29	0.120	14.106	14M1G7W
	16QAM			18.89	0.069	14.110	14M1D7W
20	BPSK	2510	2560	20.95	0.111	17.861	17M9G7W
	QPSK			20.93	0.110	18.920	18M9G7W
	16QAM			18.10	0.058	18.925	18M9D7W

5.3.4. NR n25

Part 24							
EIRP Limit(W)		2.0					
Antenna Gain (dBi)		-0.9					
Bandwidth (MHz)	Modulation	Low Frequency (MHz)	Upper Frequency (MHz)	Conducted Average (dBm)	EIRP Average (W)	99% OBW (MHz)	Emission Designator
5	BPSK	1852.5	1912.5	22.12	0.132	4.472	4M47G7W
	QPSK			22.09	0.132	4.481	4M48G7W
	16QAM			20.01	0.081	4.473	4M47D7W
10	BPSK	1855	1910	21.87	0.125	8.944	8M94G7W
	QPSK			21.79	0.123	8.955	8M96G7W
	16QAM			20.06	0.082	8.950	8M95D7W
15	BPSK	1857.5	1907.5	21.97	0.128	13.425	13M4G7W
	QPSK			21.96	0.128	13.431	13M4G7W
	16QAM			20.04	0.082	13.446	13M4D7W
20	BPSK	1860	1905	22.06	0.131	17.899	17M9G7W
	QPSK			22.13	0.133	17.867	17M9G7W
	16QAM			19.94	0.080	17.884	17M9D7W

This report shall not be reproduced except in full, without the written approval of UL Verification Services (Guangzhou) Co., Ltd, Song Shan Lake Branch

5.3.5. NR n41

Part 27							
EIRP Limit(W)		2.0					
Antenna Gain (dBi)		-0.5					
Bandwidth (MHz)	Modulation	Low Frequency (MHz)	Upper Frequency (MHz)	Conducted Average (dBm)	EIRP Average (W)	99% OBW (MHz)	Emission Designator
10	BPSK	2501.01	2685	26.32	0.382	8.582	8M58G7W
	QPSK			26.25	0.376	8.586	8M59G7W
	16QAM			23.16	0.185	8.589	8M59D7W
15	BPSK	2503.5	2682.48	26.28	0.378	12.884	12M9G7W
	QPSK			26.28	0.378	12.913	12M9G7W
	16QAM			23.48	0.199	12.948	13M0D7W
20	BPSK	2506.02	2679.99	26.32	0.382	17.882	17M9G7W
	QPSK			26.31	0.381	17.859	17M9G7W
	16QAM			22.66	0.164	17.916	17M9D7W
30	BPSK	2511	2674.98	26.32	0.382	26.834	26M8G7W
	QPSK			26.35	0.385	26.772	26M8G7W
	16QAM			22.33	0.152	26.884	26M9D7W
40	BPSK	2516.01	2670	26.31	0.381	35.818	35M8G7W
	QPSK			26.32	0.382	35.873	35M9G7W
	16QAM			22.32	0.152	35.831	35M9D7W
50	BPSK	2521.02	2664.99	26.23	0.374	45.896	45M9G7W
	QPSK			26.26	0.377	45.744	45M7G7W
	16QAM			22.59	0.162	45.732	45M7D7W
60	BPSK	2526	2659.98	26.12	0.365	57.799	57M8G7W
	QPSK			26.10	0.363	57.801	57M8G7W
	16QAM			22.47	0.157	57.853	57M9D7W
80	BPSK	2536.02	2649.99	26.05	0.359	77.183	77M2G7W
	QPSK			26.06	0.360	77.185	77M2G7W
	16QAM			22.46	0.157	77.115	77M1D7W
90	BPSK	2541	2644.98	26.07	0.405	86.898	86M9G7W
	QPSK			26.08	0.406	86.733	86M7G7W
	16QAM			22.06	0.161	86.846	86M8D7W
100	BPSK	2546.01	2640	25.85	0.385	96.405	96M4G7W
	QPSK			25.86	0.385	96.292	96M3G7W
	16QAM			21.61	0.145	96.287	96M3D7W

This report shall not be reproduced except in full, without the written approval of UL Verification Services (Guangzhou) Co., Ltd, Song Shan Lake Branch

5.3.6. NR n66

Part 27							
EIRP Limit(W)		2.0					
Antenna Gain (dBi)		0.4					
Bandwidth (MHz)	Modulation	Low Frequency (MHz)	Upper Frequency (MHz)	Conducted Average (dBm)	EIRP Average (W)	99% OBW (MHz)	Emission Designator
5	BPSK	1712.5	1777.5	21.95	0.172	4.474	4M47G7W
	QPSK			22.03	0.175	4.469	4M47G7W
	16QAM			20.25	0.116	4.477	4M48D7W
10	BPSK	1715	1775	21.70	0.162	8.954	9M00G7W
	QPSK			21.83	0.167	8.954	9M00G7W
	16QAM			19.63	0.101	8.946	8M95D7W
15	BPSK	1717.5	1772.5	21.87	0.169	13.423	13M4G7W
	QPSK			21.89	0.169	13.450	13M5G7W
	16QAM			19.90	0.107	13.441	13M4D7W
20	BPSK	1720	1770	21.77	0.165	17.924	17M9G7W
	QPSK			21.93	0.171	17.932	17M9G7W
	16QAM			19.89	0.107	17.879	17M9D7W
30	BPSK	1725	1765	21.38	0.137	28.599	28M6G7W
	QPSK			20.90	0.123	28.545	28M5G7W
	16QAM			20.88	0.122	28.531	28M5D7W
40	BPSK	1730	1760	21.69	0.162	38.615	38M6G7W
	QPSK			21.78	0.165	38.568	38M6G7W
	16QAM			20.86	0.134	38.554	38M6D7W

This report shall not be reproduced except in full, without the written approval of UL Verification Services (Guangzhou) Co., Ltd, Song Shan Lake Branch

5.3.7. NR n71

Part 27							
EIRP Limit(W)		3.0					
Antenna Gain (dBi)		-3.2					
Bandwidth (MHz)	Modulation	Low Frequency (MHz)	Upper Frequency (MHz)	Conducted Average (dBm)	EIRP Average (W)	99% OBW (MHz)	Emission Designator
5	BPSK	665.5	695.5	22.87	0.093	4.482	4M48G7W
	QPSK			22.98	0.095	4.466	4M47G7W
	16QAM			20.68	0.056	4.473	4M47D7W
10	BPSK	668	6693	22.87	0.093	8.937	8M94G7W
	QPSK			22.78	0.091	8.950	8M95G7W
	16QAM			20.21	0.050	8.956	8M96D7W
15	BPSK	670.5	690.5	22.93	0.094	13.438	13M4G7W
	QPSK			23.00	0.095	13.441	13M4G7W
	16QAM			20.24	0.051	13.413	13M4D7W
20	BPSK	673	688	22.98	0.095	17.851	17M9G7W
	QPSK			22.97	0.095	17.867	17M9G7W
	16QAM			20.26	0.051	17.854	17M9D7W

This report shall not be reproduced except in full, without the written approval of UL Verification Services (Guangzhou) Co., Ltd, Song Shan Lake Branch

5.3.8. NR n77 (3450-3550 MHz)

Part 27							
EIRP Limit(W)		1.0					
Antenna Gain (dBi)		-2.3					
Bandwidth (MHz)	Modulation	Low Frequency (MHz)	Upper Frequency (MHz)	Conducted Average (dBm)	EIRP Average (W)	99% OBW (MHz)	Emission Designator
10	BPSK	3455.0	3545.0	26.78	0.281	8.611	8M61G7W
	QPSK			26.77	0.280	8.615	8M62G7W
	16QAM			23.44	0.130	8.596	8M60D7W
15	BPSK	3457.5	3542.5	26.70	0.275	12.929	12M9G7W
	QPSK			26.72	0.277	12.942	12M9G7W
	16QAM			23.52	0.132	12.914	12M9D7W
20	BPSK	3460.0	3540.0	26.69	0.275	17.886	17M9G7W
	QPSK			26.74	0.278	17.876	17M9G7W
	16QAM			23.47	0.131	17.832	17M8D7W
25	BPSK	3462.5	3542.5	26.82	0.283	22.909	22M9G7W
	QPSK			25.76	0.222	22.913	22M9G7W
	16QAM			23.47	0.131	22.918	22M9D7W
30	BPSK	3465.0	3535.0	26.80	0.282	26.862	26M9G7W
	QPSK			25.85	0.226	26.815	26M8G7W
	16QAM			23.11	0.121	26.841	26M8D7W
40	BPSK	3470.0	3530.0	26.74	0.278	35.727	35M7G7W
	QPSK			25.76	0.222	35.814	35M8G7W
	16QAM			23.16	0.122	35.854	35M9D7W
50	BPSK	3475.0	3525.0	26.85	0.285	45.781	45M8G7W
	QPSK			25.73	0.220	45.765	45M8G7W
	16QAM			23.39	0.129	45.668	45M7D7W
60	BPSK	3480.0	3520.0	26.76	0.279	57.721	57M7G7W
	QPSK			25.84	0.226	57.802	57M8G7W
	16QAM			23.16	0.122	57.811	57M8D7W
70	BPSK	3485.0	3515.0	26.88	0.287	64.285	64M3G7W
	QPSK			25.68	0.218	64.235	64M2G7W
	16QAM			23.12	0.121	64.276	64M3D7W
80	BPSK	3480.0	3510.0	26.76	0.279	77.235	77M2G7W
	QPSK			25.79	0.223	77.146	77M1G7W
	16QAM			22.54	0.106	77.078	77M1D7W
90	BPSK	3485.0	3505.0	26.69	0.275	86.678	86M7G7W
	QPSK			25.47	0.207	86.527	86M6G7W
	16QAM			22.13	0.096	86.650	86M7D7W
100	BPSK	3500.0	3500.0	25.90	0.229	95.961	96M0G7W

This report shall not be reproduced except in full, without the written approval of UL Verification Services (Guangzhou) Co., Ltd, Song Shan Lake Branch

	QPSK			25.40	0.204	95.807	95M8G7W
	16QAM			25.40	0.204	96.141	96M1D7W

This report shall not be reproduced except in full, without the written approval of UL Verification Services (Guangzhou) Co., Ltd, Song Shan Lake Branch

5.3.9. NR n77 (3700-3980 MHz)

Part 27							
EIRP Limit(W)		1.0					
Antenna Gain (dBi)		-0.9					
Bandwidth (MHz)	Modulation	Low Frequency (MHz)	Upper Frequency (MHz)	Conducted Average (dBm)	EIRP Average (W)	99% OBW (MHz)	Emission Designator
10	BPSK	3705	3975	26.32	0.348	8.592	8M60G7W
	QPSK			26.30	0.347	8.607	8M61G7W
	16QAM			23.05	0.164	8.601	8M60D7W
15	BPSK	3707.5	3972.5	26.30	0.347	12.902	12M9G7W
	QPSK			26.25	0.343	12.890	12M9G7W
	16QAM			22.70	0.151	12.920	12M9D7W
20	BPSK	3710	3970	26.28	0.425	17.872	17M9G7W
	QPSK			26.27	0.424	17.865	17M9G7W
	16QAM			22.89	0.195	17.882	17M9D7W
25	BPSK	3712.5	3972.5	25.74	0.305	22.927	22M9G7W
	QPSK			25.26	0.273	22.929	22M9G7W
	16QAM			22.27	0.137	22.921	22M9D7W
30	BPSK	3715	3965	25.75	0.305	26.855	26M9G7W
	QPSK			24.65	0.237	26.839	26M8G7W
	16QAM			21.93	0.127	26.832	26M8D7W
40	BPSK	3720	3960	25.79	0.308	35.844	35M8G7W
	QPSK			24.69	0.239	35.847	35M8G7W
	16QAM			21.90	0.126	38.400	38M4D7W
50	BPSK	3725	3955	25.83	0.311	45.825	45M8G7W
	QPSK			24.73	0.242	45.871	45M9G7W
	16QAM			22.20	0.135	45.777	45M8D7W
60	BPSK	3730	3950	25.86	0.385	57.785	57M8G7W
	QPSK			24.84	0.305	56.949	56M9G7W
	16QAM			22.24	0.167	57.805	57M8D7W
70	BPSK	3735	3945	25.42	0.283	64.293	64M3G7W
	QPSK			24.83	0.247	64.338	64M3G7W
	16QAM			22.29	0.138	64.254	64M3D7W
80	BPSK	3740	3940	26.04	0.327	77.137	77M1G7W
	QPSK			24.12	0.210	77.232	77M2G7W
	16QAM			22.16	0.134	77.221	77M2D7W
90	BPSK	3745	3935	25.97	0.395	86.774	86M8G7W
	QPSK			24.66	0.292	86.919	87M0G7W
	16QAM			21.99	0.158	86.835	86M8D7W
100	BPSK	3750	3930	26.29	0.426	96.658	96M7G7W

This report shall not be reproduced except in full, without the written approval of UL Verification Services (Guangzhou) Co., Ltd, Song Shan Lake Branch

	QPSK			24.63	0.290	96.179	96M2G7W
	16QAM			22.04	0.160	96.236	96M2D7W

This report shall not be reproduced except in full, without the written approval of UL Verification Services (Guangzhou) Co., Ltd, Song Shan Lake Branch

5.4. WORST-CASE CONFIGURATION AND MODE

During all testing, EUT is in link mode with base station emulator at maximum power level. The worst-case scenario for all measurements is based on the average conducted output power measurement investigation results. Output power measurements were measured on QPSK, 16QAM. All testing was performed using QPSK and 16QAM modulations to represent the worst case.

The radiated spurious emissions measurements were carried out in semi-anechoic chamber with 3-meter test range, and EUT was investigated in three orthogonal orientations X,Y and Z. It was determined that X orientation was the worst-case.

Radiated spurious emissions were investigated below 30 MHz, 30 MHz - 1 GHz and above 1 GHz. There are no emissions found on below 1GHz and above 18 GHz, the emissions between 1 GHz – 18 GHz are tested ate the low, mid, high channel and the worse configuration.

Test Items	Worst case test configuration			
Description	Modulation	Channel	Bandwidth (MHz)	RB Configuration
Radiated Spurious Emissions	QPSK	L, M, H	Maximum BW	RB size=1, RB Location= Low

This report shall not be reproduced except in full, without the written approval of UL Verification Services (Guangzhou) Co., Ltd, Song Shan Lake Branch

5.5. DESCRIPTION OF AVAILABLE ANTENNAS

Antenna	Band	Antenna Type	MAX Antenna Gain (dBi)
Ant0	NR n2	LDS	-0.9
Ant0	NR n5	LDS	-3.9
Ant0	NR n7	LDS	-0.5
Ant0	NR n25	LDS	-0.9
Ant3	NR n41	LDS	-0.5
Ant0	NR n66	LDS	0.4
Ant0	NR n71	LDS	-3.2
Ant4	NR n77 (3450-3550 MHz)	LDS	-2.3
Ant4	NR n77 (3700-3980 MHz)	LDS	-0.9

Band	Transmit and Receive Mode	Description
NR n2	☒1TX, 2RX	Ant0 antenna can be used as transmitting/receiving antenna, DIV antenna can be used as receiving antenna
NR n5	☒1TX, 2RX	Ant0 antenna can be used as transmitting/receiving antenna, DIV antenna can be used as receiving antenna
NR n7	☒1TX, 2RX	Ant0 antenna can be used as transmitting/receiving antenna, DIV antenna can be used as receiving antenna
NR n25	☒1TX, 2RX	Ant0 antenna can be used as transmitting/receiving antenna, DIV antenna can be used as receiving antenna
NR n41	☒1TX, 4RX	Ant3 antenna can be used as transmitting/receiving antenna, DIV antenna can be used as receiving antenna
NR n66	☒1TX, 2RX	Ant0 antenna can be used as transmitting/receiving antenna, DIV antenna can be used as receiving antenna
NR n71	☒1TX, 2RX	Ant0 antenna can be used as transmitting/receiving antenna, DIV antenna can be used as receiving antenna
NR n77 (3450-3550 MHz)	☒1TX, 4RX	Ant4 antenna can be used as transmitting/receiving antenna, DIV antenna can be used as receiving antenna
NR n77 (3700-3980 MHz)	☒1TX, 4RX	Ant4 antenna can be used as transmitting/receiving antenna, DIV antenna can be used as receiving antenna

Note: The value of the antenna gain was declared by customer.

This report shall not be reproduced except in full, without the written approval of UL Verification Services (Guangzhou) Co., Ltd, Song Shan Lake Branch

5.6. DESCRIPTION OF TEST SETUP

Conducted

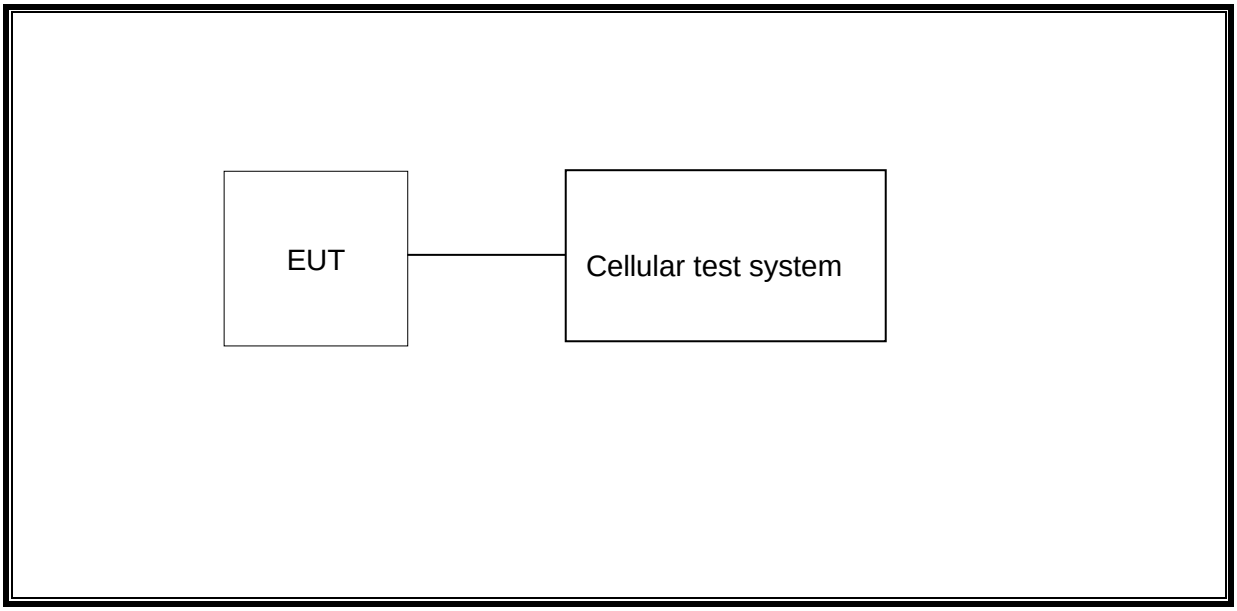

Radiated

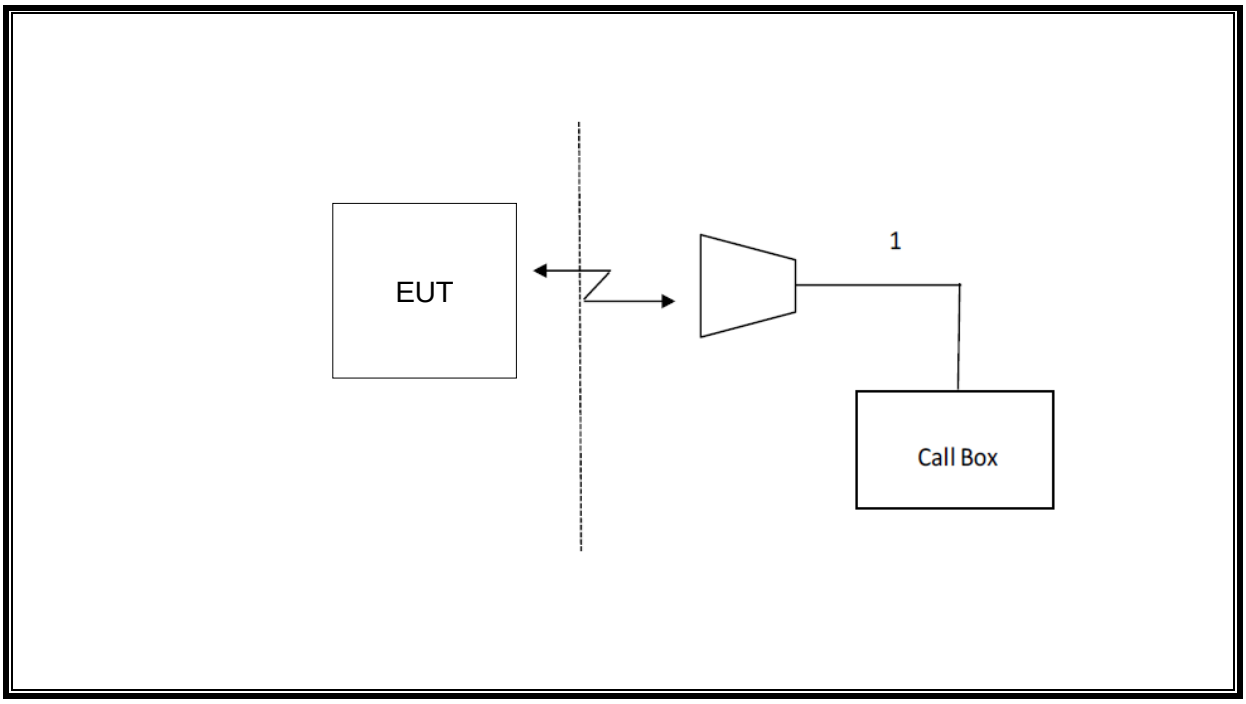

This report shall not be reproduced except in full, without the written approval of UL Verification Services (Guangzhou) Co., Ltd, Song Shan Lake Branch

6. MEASURING INSTRUMENT AND SOFTWARE USED

Antenna Terminal Test						
Instrument						
Used	Equipment	Manufacturer	Model No.	Serial No.	Last Cal.	Next Cal.
☑	Spectrum Analyzer	R&S	FSV40	S422060001	Oct.12, 2023	Oct.11, 2024
☑	Wideband Radio Communication Tester	R&S	CMW500	155523	Oct.12, 2023	Oct.11, 2024
☑	DC Power Supply	Array	3662A	A1512015	Oct.12, 2023	Oct.11, 2024
Software						
Used	Description		Manufacturer	Name		Version
☑	Tonsend Cellular Test System		Tonsend	JS1120 RF Auto Test System		3.1.46
Radiated Test						
Instrument						
Used	Equipment	Manufacturer	Model No.	Serial No.	Last Cal.	Next Cal.
☑	MXE EMI Receiver	KESIGHT	N9038A	MY56400036	Oct.12, 2023	Oct.11, 2024
☑	Hybrid Log Periodic Antenna	TDK	HLP-3003C	130959	Aug.02, 2021	Aug.01, 2024
☑	Preamplifier	HP	8447D	2944A09099	Oct.12, 2023	Oct.11, 2024
☑	EMI Measurement Receiver	R&S	ESR26	101377	Oct.12, 2023	Oct.11, 2024
☑	Horn Antenna	TDK	HRN-0118	130940	July 20, 2021	July 19, 2024
☑	Horn Antenna	Schwarzbeck	BBHA9170	697	July 20, 2021	July 19, 2024
☑	Preamplifier	TDK	PA-02-0118	TRS-305-00067	Oct.12, 2023	Oct.11, 2024
☑	Preamplifier	TDK	PA-02-2	TRS-307-00003	Oct.12, 2023	Oct.11, 2024
☑	Loop antenna	Schwarzbeck	1519B	00008	Dec.14, 2021	Dec.13, 2024
☑	High Pass Filter	Wi	WHKX10-2700-3000-18000-40SS	23	Oct.12, 2023	Oct.11, 2024
Software						
Used	Description		Manufacturer	Name		Version
☑	Test Software for Radiated disturbance		Farad	EZ-EMC		Ver. UL-3A1

This report shall not be reproduced except in full, without the written approval of UL Verification Services (Guangzhou) Co., Ltd, Song Shan Lake Branch

7. ANTENNA TERMINAL TEST RESULTS

7.1. EFFECTIVE (ISOTROPIC) RADIATED POWER OF TRANSMITTER

RULE PART(S)

FCC: §2.1046, §22.913, §24.232, §27.50

LIMITS

22.913(a) The ERP of mobile transmitters and auxiliary test transmitters must not exceed 7 Watts.
24.232(c) Mobile/portable stations are limited to 2 watts e.i.r.p. peak power and the equipment must employ means to limit the power to the minimum necessary for successful communications.
27.50(c) Portable stations (hand-held devices) in the 600 MHz uplink band and the 698-746 MHz band, and fixed and mobile stations in the 600 MHz uplink band are limited to 3 watts ERP.
27.50(d) Fixed, mobile, and portable (hand-held) stations operating in the 1710-1755 MHz band and mobile and portable stations operating in the 1695-1710 MHz and 1755-1780 MHz bands are limited to 1 watts EIRP.
27.50(h) Mobile stations are limited to 2.0 watts EIRP. All user stations are limited to 2.0 watts transmitter output power.
In addition, when the transmitter power is measured in terms of average value, the peak-to-average ratio of the power shall not exceed 13 dB.

TEST PROCEDURE

Refer to ANSI C63.26:2015 and KDB 971168 D01 Section 5.6
ERP/ EIRP = PMeas + GT − LC
where:
ERP or EIRP = effective or equivalent isotropically radiated power, respectively (expressed in the same units as PMeas, typically dBW or dBm);
PMeas = measured transmitter output power or PSD, in dBm or dBW;
GT = gain of the transmitting antenna, in dBd (ERP) or dBi (EIRP);
LC = signal attenuation in the connecting cable between the transmitter and antenna, in dB
The transmitter has a maximum radiated ERP / EIRP output powers as follows:

TEST SETUP

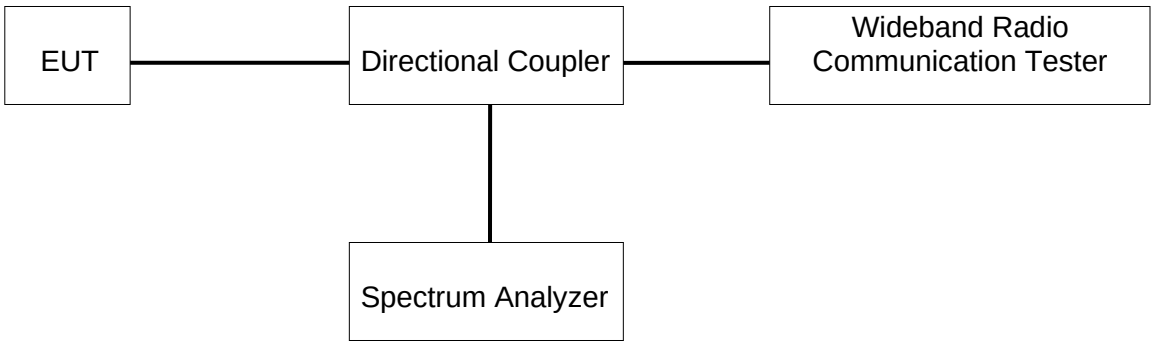

This report shall not be reproduced except in full, without the written approval of UL Verification Services (Guangzhou) Co., Ltd, Song Shan Lake Branch

TEST ENVIRONMENT

Temperature	23.4°C	Relative Humidity	57.2%
Atmosphere Pressure	101kPa	Test Voltage	DC 3.87 V

RESULTS

Please refer to Appendix A.

This report shall not be reproduced except in full, without the written approval of UL Verification Services (Guangzhou) Co., Ltd, Song Shan Lake Branch

7.2. PEAK TO AVERAGE RADIO

LIMITS

In addition, when the transmitter power is measured in terms of average value, the peak-to-average ratio of the power shall not exceed 13 dB.

TEST PROCEDURE

Refer to KDB 971168 D01 Power Meas License Digital Systems v03r01;

The transmitter output was connected to a CMW500 Test Set and configured to operate at maximum power. The PAR was measured on the Spectrum Analyzer.

TEST SETUP

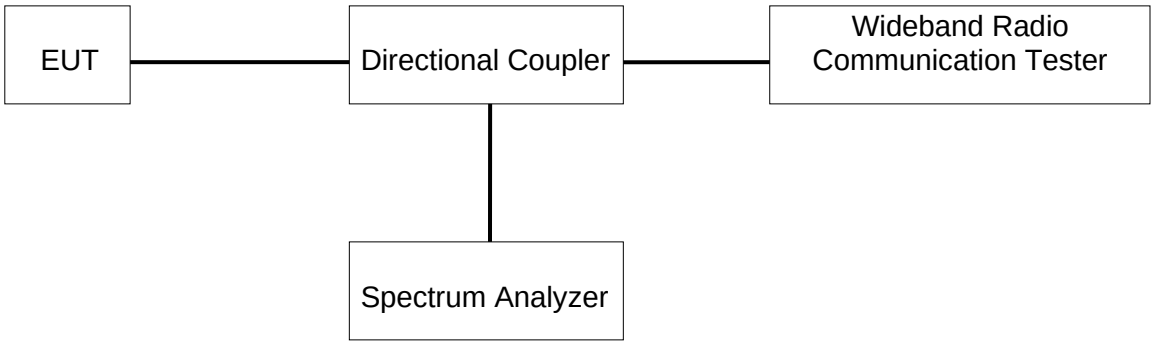

TEST ENVIRONMENT

Temperature	23.4°C	Relative Humidity	57.2%
Atmosphere Pressure	101kPa	Test Voltage	DC 3.87 V

RESULTS

Middle was used to measure as the worst case. The results from all CCDF plots are passed with 13dB peak-to-average power ratio criteria.

Please refer to Appendix B.

This report shall not be reproduced except in full, without the written approval of UL Verification Services (Guangzhou) Co., Ltd, Song Shan Lake Branch

7.3. OCCUPIED BANDWIDTH

RULE PART(S)

FCC: §2.1049

LIMITS

For reporting purposes only.

TEST PROCEDURE

The transmitter output was connected to a calibrated coaxial cable and coupler, the other end of which was connected to a spectrum analyzer. The occupied bandwidth was measured with the spectrum analyzer at the low, middle and high channel in each band. The -26dB bandwidth was also measured and recorded.

(Refer to KDB 971168 D01 Power Meas License Digital Systems v03r01)

TEST SETUP

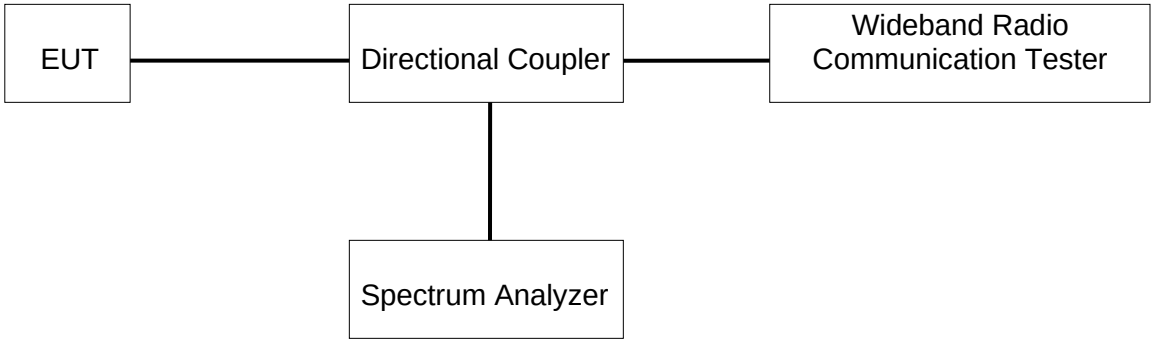

TEST ENVIRONMENT

Temperature	23.4°C	Relative Humidity	57.2%
Atmosphere Pressure	101kPa	Test Voltage	DC 3.87 V

RESULTS

There is no limit required and power is the same for low, middle and high channel, therefore, only middle channel was tested.

Please refer to Appendix C.

This report shall not be reproduced except in full, without the written approval of UL Verification Services (Guangzhou) Co., Ltd, Song Shan Lake Branch

7.4. BAND EDGE EMISSIONS

RULE PART(S)

FCC §2.1051, §22.917, §24.238, §27.53

LIMITS

The power of any emission outside of the authorized operating frequency ranges must be attenuated below the transmitting power (P) by a factor of at least 43 + 10 log (P) dB.

TEST PROCEDURE

Refer to KDB 971168 D01 Power Meas License Digital Systems v03r01
The transmitter output was connected to a CMW500 Test Set and configured to operate at maximum power. The band edge emissions were measured at the required operating frequencies in each band on the Spectrum Analyzer.

a) Set the RBW = 1 ~ 1.5 % of OBW (Typically limited to a minimum RBW of 1% of the OBW)
b) Set VBW ≥ 3 × RBW;
c) Set span ≥ 1.5 times the OBW;
d) Sweep time = Auto;
e) Detector = RMS;
f) Ensure that the number of measurement points ≥ 2*Span/RBW;
g) Trace mode = Average (100);

This report shall not be reproduced except in full, without the written approval of UL Verification Services (Guangzhou) Co., Ltd, Song Shan Lake Branch

TEST SETUP

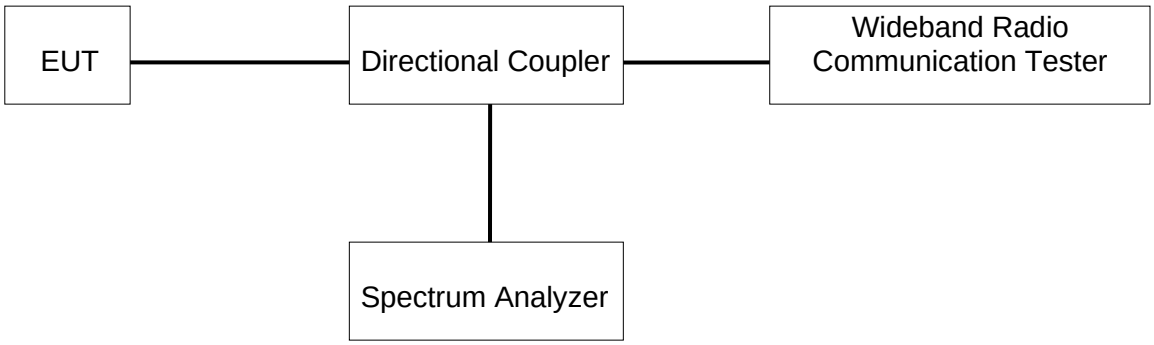

TEST ENVIRONMENT

Temperature	23.4°C	Relative Humidity	57.2%
Atmosphere Pressure	101kPa	Test Voltage	DC 3.87 V

RESULTS

Please refer to Appendix D.

This report shall not be reproduced except in full, without the written approval of UL Verification Services (Guangzhou) Co., Ltd, Song Shan Lake Branch

7.5. SPURIOUS EMISSION AT ANTENNA TERMINAL

RULE PART(S)

FCC: §2.1051, §22.901, §22.917, §24.238, §27.53

LIMITS

FCC: §22.901, §22.917, §24.238
The power of any emission outside of the authorized operating frequency ranges must be attenuated below the transmitting power (P) by a factor of at least 43 + 10 log (P) dB.

TEST PROCEDURE

Per KDB 971168 D01 Power Meas License Digital Systems v03r01
The RF output of the transmitter was connected to a spectrum analyzer through a calibrated coaxial cable. Sufficient scans were taken to show the out-of-band Emissions, if any, up to 10th harmonic. Multiple sweeps were recorded in maximum hold mode using a peak detector to ensure that the worst-case emissions were caught.

a) Set the RBW = 100 kHz for emission below 1GHz and 1MHz for emissions above 1GHz (Tests were performed 1 MHz [Worst case], to sweep 1 time for all frequency range)
b) Set VBW ≥ 3 × RBW;
c) Set span ≥ 1.5 times the OBW;
d) Sweep time = auto couple;
e) Detector = rms;
f) Ensure that the number of measurement points = Max (40001);
g) Trace mode = average (LTE 5), Maxhold (LTE Band7);

Note: Please refer to section 5.4 for bandwidth and RB setting about LTE bands.

TEST SETUP

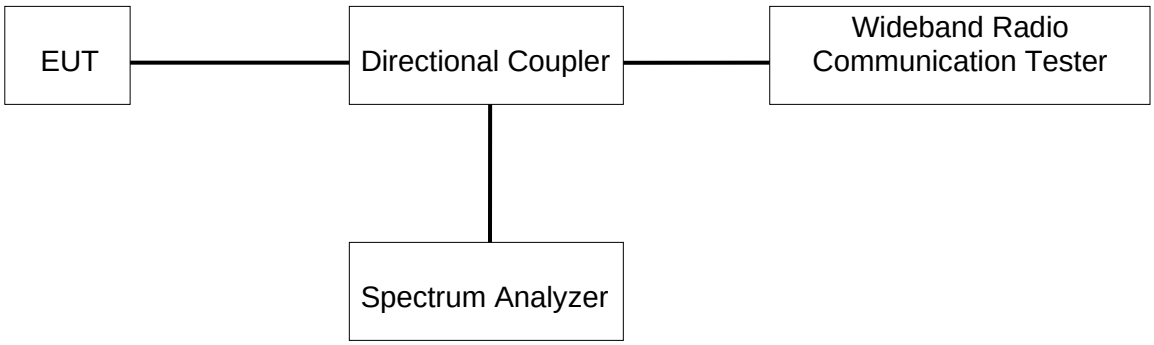

This report shall not be reproduced except in full, without the written approval of UL Verification Services (Guangzhou) Co., Ltd, Song Shan Lake Branch

TEST ENVIRONMENT

Temperature	23.4°C	Relative Humidity	57.2%
Atmosphere Pressure	101kPa	Test Voltage	DC 3.87 V

RESULTS

Please refer to Appendix E.

This report shall not be reproduced except in full, without the written approval of UL Verification Services (Guangzhou) Co., Ltd, Song Shan Lake Branch

7.6. FREQUENCY STABILITY

Rule Part:
FCC: §2.1055, §22.355, §24.235, §27.54

LIMITS

§22.355 - The carrier frequency shall not depart from the reference frequency in excess of ±2.5 ppm for mobile stations.

§24.235 and §27.54 - The frequency stability shall be sufficient to ensure that the fundamental emissions stay within the authorized bands of operation.

TEST PROCEDURE

Refer to KDB 971168 D01 Power Meas License Digital Systems v03r01.

	Normal Test Conditions	Extreme Test Conditions
Relative Humidity	45 % - 75 %	/
Atmospheric Pressure	100 kPa ~102 kPa	/
Temperature	T_N (Normal Temperature): 24.7 °C	T_L (Low Temperature): -30 °C
		T_H (High Temperature): 50 °C
Supply Voltage	V_N (Normal Voltage): DC 3.87 V	V_L (Low Voltage): DC 6.1V
		V_H (High Voltage): DC 8.3 V

TEST SETUP

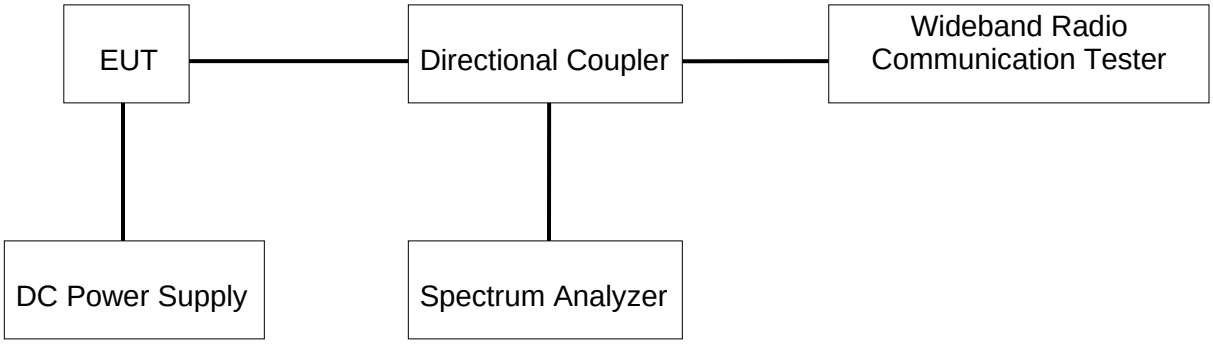

RESULTS

The peak frequency error is recorded (worst-case).

Please refer to Appendix F.

This report shall not be reproduced except in full, without the written approval of UL Verification Services (Guangzhou) Co., Ltd, Song Shan Lake Branch

8. APPENDIX

8.1. Appendix A: Effective (Isotropic) Radiated Power Output Data

8.1.1. NR n2

Bandwidth	Modulation	Mode	RB size	RB offset	Channel 370500	Channel 376000	Channel 381500
5MHz	DFT-OFDM	PI2BPSK	1	0	21.97	21.86	21.96
			1	24	21.92	21.69	21.87
			12	6	22.38	22.32	22.69
			25	0	22.33	22.27	22.51
		QPSK	1	0	21.38	21.35	21.58
			1	24	21.43	21.19	21.58
			12	6	22.43	22.32	22.61
			25	0	22.22	22.12	22.42
		16QAM	1	0	20.60	20.47	20.79
		64QAM	1	0	19.91	20.11	20.23
		256QAM	1	0	18.24	18.03	18.31
Bandwidth	Modulation	Mode	RB size	RB offset	Channel 371000	Channel 376000	Channel 381000
10MHz	DFT-OFDM	PI2BPSK	1	0	21.61	21.81	21.61
			1	51	21.88	21.45	21.86
			25	12	22.33	22.18	22.40
			24	0	22.15	22.13	22.38
		QPSK	1	0	21.23	21.35	21.24
			1	23	21.33	20.95	21.38
			12	6	22.33	22.21	22.39
			24	0	22.08	22.01	22.30
		16QAM	1	0	20.39	20.44	20.50
		64QAM	1	0	19.84	20.02	19.93
		256QAM	1	0	18.00	18.00	17.86
Bandwidth	Modulation	Mode	RB size	RB offset	Channel 371500	Channel 376000	Channel 380500
15MHz	DFT-OFDM	PI2BPSK	1	0	21.78	21.96	21.53
			1	78	21.99	21.45	21.92
			36	18	22.43	22.35	22.45
			75	0	22.02	22.15	22.07
		QPSK	1	0	21.28	21.48	20.87
			1	78	21.53	20.93	21.40
			36	18	22.51	22.36	21.45
			75	0	22.47	22.37	22.39
		16QAM	1	0	20.48	20.73	20.29
		64QAM	1	0	19.94	20.05	19.81
		256QAM	1	0	18.00	18.25	17.86
Bandwidth	Modulation	Mode	RB size	RB offset	Channel 372000	Channel 376000	Channel 380000
20MHz	DFT-OFDM	PI2BPSK	1	0	21.71	21.93	21.41
			1	105	21.95	21.35	21.79

This report shall not be reproduced except in full, without the written approval of UL Verification Services (Guangzhou) Co., Ltd, Song Shan Lake Branch

			50	25	22.02	21.84	21.96
			100	0	22.53	22.28	22.30
		QPSK	1	0	21.19	21.49	20.87
			1	105	21.57	20.86	21.40
			50	25	21.58	21.32	21.45
			100	0	22.52	22.30	22.39
		16QAM	1	0	20.50	20.59	20.10
		64QAM	1	0	19.98	20.23	19.47
		256QAM	1	0	17.92	18.26	17.65

This report shall not be reproduced except in full, without the written approval of UL Verification Services (Guangzhou) Co., Ltd, Song Shan Lake Branch

8.1.2. NR n5

Bandwidth	Modulation	Mode	RB size	RB offset	Channel 165300	Channel 167300	Channel 169300
5MHz	DFT-OFDM	PI2BPSK	1	0	23.26	23.39	23.56
			1	24	23.24	23.46	23.77
			12	6	23.80	23.95	24.21
			25	0	23.24	23.48	23.73
		QPSK	1	0	22.81	22.97	23.28
			1	24	22.86	23.02	23.48
			12	6	23.81	23.97	24.24
			25	0	22.74	23.00	23.14
		16QAM	1	0	21.87	22.08	22.08
		64QAM	1	0	21.23	21.29	21.55
		256QAM	1	0	19.44	19.73	19.67
Bandwidth	Modulation	Mode	RB size	RB offset	Channel 165800	Channel 167300	Channel 168800
10MHz	DFT-OFDM	PI2BPSK	1	0	23.08	23.12	23.33
			1	51	23.12	23.30	23.50
			25	12	23.57	23.79	23.84
			24	0	23.01	23.39	23.20
		QPSK	1	0	22.63	22.71	22.93
			1	23	22.79	22.87	23.16
			12	6	23.59	23.80	23.88
			24	0	22.51	22.87	22.64
		16QAM	1	0	21.68	21.62	22.02
		64QAM	1	0	21.01	20.94	21.25
		256QAM	1	0	19.33	19.27	19.51
Bandwidth	Modulation	Mode	RB size	RB offset	Channel 166300	Channel 167300	Channel 168300
15MHz	DFT-OFDM	PI2BPSK	1	0	23.22	23.14	23.31
			1	78	23.39	23.34	23.63
			36	18	23.86	24.02	24.00
			75	0	23.28	23.59	23.57
		QPSK	1	0	22.69	22.74	22.93
			1	78	22.89	23.00	23.27
			36	18	23.85	24.02	24.02
			75	0	22.78	23.11	23.03
		16QAM	1	0	21.72	21.81	21.95
		64QAM	1	0	21.13	21.03	21.21
		256QAM	1	0	19.36	19.36	19.43
Bandwidth	Modulation	Mode	RB size	RB offset	Channel 166800	Channel 167300	Channel 167800
20MHz	DFT-OFDM	PI2BPSK	1	0	23.18	23.20	23.01
			1	105	23.39	23.48	23.54
			50	25	23.35	23.65	23.69
			100	0	23.94	24.03	23.97
		QPSK	1	0	22.75	22.76	22.73

This report shall not be reproduced except in full, without the written approval of UL Verification Services (Guangzhou) Co., Ltd, Song Shan Lake Branch

			1	105	22.96	23.13	23.15
			50	25	22.88	23.16	23.17
			100	0	23.96	24.04	24.06
		16QAM	1	0	21.73	21.75	21.82
		64QAM	1	0	21.09	21.09	21.08
		256QAM	1	0	19.32	19.37	19.23

This report shall not be reproduced except in full, without the written approval of UL Verification Services (Guangzhou) Co., Ltd, Song Shan Lake Branch

8.1.3. NR n7

Bandwidth	Modulation	Mode	RB size	RB offset	Channel	Channel	Channel
					500500	507000	513500
5MHz	DFT-OFDM	PI2BPSK	1	0	19.53	20.18	20.73
			1	24	19.64	20.17	20.88
			12	6	20.11	20.80	20.98
			25	0	19.62	20.32	20.83
		QPSK	1	0	19.09	19.62	20.26
			1	24	19.07	19.70	20.27
			12	6	20.12	20.86	21.41
			25	0	19.13	19.73	20.37
		16QAM	1	0	18.07	18.80	18.89
		64QAM	1	0	17.64	18.16	18.81
		256QAM	1	0	15.64	16.18	16.94
Bandwidth	Modulation	Mode	RB size	RB offset	Channel	Channel	Channel
					501000	507000	513000
10MHz	DFT-OFDM	PI2BPSK	1	0	19.36	19.96	20.46
			1	51	19.34	20.01	20.58
			25	12	19.97	20.56	20.88
			50	0	19.44	20.06	20.60
		QPSK	1	0	19.16	19.40	19.89
			1	51	19.19	19.45	20.15
			25	12	20.26	20.59	21.14
			50	0	19.22	19.56	20.12
		16QAM	1	0	17.69	18.41	18.77
		64QAM	1	0	17.31	18.02	18.41
		256QAM	1	0	15.57	15.94	16.41
Bandwidth	Modulation	Mode	RB size	RB offset	Channel	Channel	Channel
					501500	507000	512500
15MHz	DFT-OFDM	PI2BPSK	1	0	19.49	20.02	20.37
			1	78	19.69	20.16	20.67
			36	18	20.10	20.73	20.96
			75	0	19.67	20.26	20.71
		QPSK	1	0	19.21	19.44	19.84
			1	78	19.08	19.57	20.07
			36	18	20.10	20.77	21.29
			75	0	19.13	19.80	20.25
		16QAM	1	0	17.81	18.40	18.89
		64QAM	1	0	17.55	18.13	18.31
		256QAM	1	0	15.63	16.05	16.48
Bandwidth	Modulation	Mode	RB size	RB offset	Channel	Channel	Channel
					502000	507000	512000
20MHz	DFT-OFDM	PI2BPSK	1	0	19.01	19.18	19.63
			1	105	19.62	19.79	20.25
			50	25	20.49	20.70	20.95
			100	0	19.71	19.99	20.42
		QPSK	1	0	19.03	19.13	19.15

This report shall not be reproduced except in full, without the written approval of UL Verification Services (Guangzhou) Co., Ltd, Song Shan Lake Branch

			1	105	19.09	19.33	19.65
			50	25	20.50	20.73	20.93
			100	0	19.21	19.48	19.94
		16QAM	1	0	17.35	17.68	18.10
		64QAM	1	0	17.13	17.17	17.59
		256QAM	1	0	15.24	15.26	15.63

This report shall not be reproduced except in full, without the written approval of UL Verification Services (Guangzhou) Co., Ltd, Song Shan Lake Branch

8.1.4. NR n25

Bandwidth	Modulation	Mode	RB size	RB offset	Channel 370500	Channel 376500	Channel 382500
5MHz	DFT-OFDM	PI2BPSK	1	0	21.31	21.29	21.59
			1	24	21.40	21.25	21.30
			12	6	21.80	21.87	22.12
			25	0	21.39	21.55	21.51
		QPSK	1	0	20.86	20.93	21.17
			1	24	20.87	20.80	20.89
			12	6	22.01	21.67	22.09
			25	0	20.85	20.73	20.86
		16QAM	1	0	19.70	19.57	20.01
		64QAM	1	0	19.62	19.53	19.40
		256QAM	1	0	17.52	17.49	17.52
Bandwidth	Modulation	Mode	RB size	RB offset	Channel 371000	Channel 376500	Channel 382000
10MHz	DFT-OFDM	PI2BPSK	1	0	21.13	21.20	21.35
			1	51	21.20	20.93	20.98
			25	12	21.85	21.56	21.87
			24	0	21.13	21.14	21.14
		QPSK	1	0	20.80	20.65	20.74
			1	23	20.66	20.44	20.66
			12	6	21.57	21.71	21.79
			24	0	20.65	20.67	20.64
		16QAM	1	0	19.69	19.55	20.06
		64QAM	1	0	19.14	19.18	19.49
		256QAM	1	0	17.46	17.20	17.84
Bandwidth	Modulation	Mode	RB size	RB offset	Channel 371500	Channel 376500	Channel 381500
15MHz	DFT-OFDM	PI2BPSK	1	0	21.34	21.37	21.29
			1	78	21.52	20.94	21.14
			36	18	21.85	21.82	21.97
			75	0	21.35	21.24	21.48
		QPSK	1	0	20.80	20.66	20.96
			1	78	20.73	20.98	20.61
			36	18	21.96	21.89	21.96
			75	0	20.76	21.05	21.04
		16QAM	1	0	19.58	20.04	19.79
		64QAM	1	0	19.09	19.20	19.03
		256QAM	1	0	17.50	17.59	17.50
Bandwidth	Modulation	Mode	RB size	RB offset	Channel 372000	Channel 376500	Channel 381000
20MHz	DFT-OFDM	PI2BPSK	1	0	21.13	21.52	21.03
			1	105	21.44	20.93	21.18
			50	25	21.39	21.21	21.58
			100	0	22.06	21.90	21.95
		QPSK	1	0	20.77	20.96	20.59

This report shall not be reproduced except in full, without the written approval of UL Verification Services (Guangzhou) Co., Ltd, Song Shan Lake Branch

			1	105	21.00	20.65	20.74
			50	25	21.02	20.87	21.18
			100	0	22.13	21.68	22.04
		16QAM	1	0	19.61	19.94	19.75
		64QAM	1	0	19.01	19.52	18.91
		256QAM	1	0	17.61	17.44	17.31

This report shall not be reproduced except in full, without the written approval of UL Verification Services (Guangzhou) Co., Ltd, Song Shan Lake Branch

8.1.5. NR n41

Bandwidth	Modulation	Mode	RB size	RB offset	Channel 500200	Channel 518598	Channel 537000
10MHz	DFT-OFDM	PI2BPSK	1	0	22.64	22.46	22.77
			1	23	26.14	22.44	26.32
			12	6	25.76	25.94	25.85
			24	0	22.60	25.48	23.00
		QPSK	1	0	22.58	22.46	21.54
			1	23	22.62	22.48	21.32
			12	6	26.25	25.92	25.86
			24	0	25.27	24.97	24.71
		16QAM	1	0	22.73	22.65	23.16
		64QAM	1	0	22.91	22.54	23.35
		256QAM	1	0	21.50	21.69	22.26
Bandwidth	Modulation	Mode	RB size	RB offset	Channel 500700	Channel 518598	Channel 536500
15MHz	DFT-OFDM	PI2BPSK	1	0	22.67	22.24	22.72
			1	37	26.21	22.42	26.28
			18	9	25.65	25.89	25.86
			36	0	22.52	25.42	22.81
		QPSK	1	0	22.41	22.27	22.99
			1	37	22.61	22.40	22.84
			18	9	26.21	25.90	26.28
			36	0	25.16	24.97	25.38
		16QAM	1	0	22.63	22.08	23.48
		64QAM	1	0	22.88	22.66	22.81
		256QAM	1	0	21.93	21.74	21.81
Bandwidth	Modulation	Mode	RB size	RB offset	Channel 501204	Channel 518598	Channel 535998
20MHz	DFT-OFDM	PI2BPSK	1	0	22.59	22.14	22.75
			1	50	26.27	22.39	26.32
			25	12	25.82	25.93	25.82
			50	0	22.51	25.43	22.73
		QPSK	1	0	22.50	22.25	22.94
			1	50	22.69	22.42	22.90
			25	12	26.31	25.95	26.28
			50	0	25.24	24.93	25.31
		16QAM	1	0	22.60	22.44	22.66
		64QAM	1	0	22.58	21.93	22.66
		256QAM	1	0	21.29	21.65	21.69
Bandwidth	Modulation	Mode	RB size	RB offset	Channel 502200	Channel 518598	Channel 534996
30MHz	DFT-OFDM	PI2BPSK	1	0	22.21	21.91	22.63
			1	77	26.32	22.14	26.25
			36	18	25.78	25.93	25.66
			75	0	22.27	25.37	22.28
		QPSK	1	0	22.36	21.93	22.73

This report shall not be reproduced except in full, without the written approval of UL Verification Services (Guangzhou) Co., Ltd, Song Shan Lake Branch

			1	77	22.26	22.14	22.72
			36	18	26.35	25.87	26.34
			75	0	25.26	24.88	25.34
		16QAM	1	0	22.26	22.03	22.33
		64QAM	1	0	22.25	22.02	21.92
		256QAM	1	0	22.11	21.30	21.26
Bandwidth	Modulation	Mode	RB size	RB offset	Channel	Channel	Channel
					503202	518598	534000
40MHz	DFT-OFDM	PI2BPSK	1	0	22.05	21.70	22.41
			1	105	25.70	21.84	25.48
			50	25	26.31	25.33	26.12
			100	0	22.20	25.86	22.12
		QPSK	1	0	22.08	21.81	22.26
			1	105	21.89	21.81	22.60
			50	25	25.17	24.84	26.26
			100	0	26.32	25.86	25.18
		16QAM	1	0	22.32	22.11	22.28
		64QAM	1	0	22.16	21.65	21.83
		256QAM	1	0	20.94	21.06	20.97
Bandwidth	Modulation	Mode	RB size	RB offset	Channel	Channel	Channel
					504204	518598	532998
50MHz	DFT-OFDM	PI2BPSK	1	0	22.43	21.98	22.49
			1	132	22.09	22.03	25.52
			64	32	25.67	25.33	26.03
			128	0	26.23	25.89	22.15
		QPSK	1	0	22.30	21.82	21.99
			1	132	21.93	21.82	22.30
			64	32	25.13	24.88	25.02
			128	0	26.26	25.93	26.17
		16QAM	1	0	22.53	21.64	22.59
		64QAM	1	0	22.27	21.76	22.71
		256QAM	1	0	21.67	21.86	21.55
Bandwidth	Modulation	Mode	RB size	RB offset	Channel	Channel	Channel
					505200	518598	531996
60MHz	DFT-OFDM	PI2BPSK	1	0	22.23	21.94	22.49
			1	161	21.97	21.90	25.43
			81	40	25.54	25.28	25.98
			162	0	26.12	25.89	22.15
		QPSK	1	0	22.32	21.93	22.43
			1	161	21.90	21.85	22.62
			81	40	25.06	24.76	25.04
			162	0	26.10	25.84	26.09
		16QAM	1	0	22.47	21.76	22.35
		64QAM	1	0	22.43	22.13	22.14
		256QAM	1	0	21.60	21.24	21.38
Bandwidth	Modulation	Mode	RB size	RB offset	Channel	Channel	Channel
					507204	518598	529998
80MHz	DFT-OFDM	PI2BPSK	1	0	22.14	21.79	22.51

This report shall not be reproduced except in full, without the written approval of UL Verification Services (Guangzhou) Co., Ltd, Song Shan Lake Branch

			1	216	21.59	21.83	26.05
			108	54	26.02	25.90	25.46
			216	0	25.43	25.22	21.81
		QPSK	1	0	22.12	21.71	21.71
			1	216	21.65	21.75	22.47
			108	54	26.06	25.84	25.06
			216	0	24.87	24.77	26.04
		16QAM	1	0	22.46	22.19	22.21
		64QAM	1	0	22.39	21.96	21.71
		256QAM	1	0	21.14	21.08	21.18
Bandwidth	Modulation	Mode	RB size	RB offset	Channel	Channel	Channel
					508200	518598	528996
90MHz	DFT-OFDM	PI2BPSK	1	0	21.85	21.56	22.21
			1	244	21.57	21.99	25.94
			120	60	26.07	25.87	25.43
			240	0	25.44	25.29	21.71
		QPSK	1	0	21.80	21.43	21.55
			1	244	21.37	21.82	22.35
			120	60	26.08	25.92	26.02
			240	0	24.94	24.75	24.93
		16QAM	1	0	22.06	21.81	21.55
		64QAM	1	0	21.88	21.38	21.72
		256QAM	1	0	20.76	20.87	20.93
Bandwidth	Modulation	Mode	RB size	RB offset	Channel	Channel	Channel
					509202	518598	528000
100MHz	DFT-OFDM	PI2BPSK	1	0	21.45	21.18	21.33
			1	272	21.25	21.70	21.91
			135	67	25.85	25.72	25.77
			270	0	25.15	25.16	25.27
		QPSK	1	0	21.54	21.02	21.22
			1	272	21.32	21.50	21.95
			135	67	25.86	25.72	25.83
			270	0	24.71	24.64	24.77
		16QAM	1	0	21.55	21.23	21.61
		64QAM	1	0	21.72	21.10	21.32
		256QAM	1	0	20.93	20.95	20.55

This report shall not be reproduced except in full, without the written approval of UL Verification Services (Guangzhou) Co., Ltd, Song Shan Lake Branch

8.1.6. NR n66

Bandwidth	Modulation	Mode	RB size	RB offset	Channel 342500	Channel 349000	Channel 355500
5MHz	DFT-OFDM	PI2BPSK	1	0	21.35	21.29	20.48
			1	24	21.95	21.26	21.15
			12	6	21.58	21.72	20.66
			25	0	21.58	21.40	20.52
		QPSK	1	0	21.01	20.92	20.12
			1	24	22.03	20.80	21.07
			12	6	21.13	21.75	20.08
			25	0	21.17	20.75	20.18
		16QAM	1	0	20.25	19.62	19.07
		64QAM	1	0	19.64	19.23	18.63
		256QAM	1	0	17.87	17.40	16.49
Bandwidth	Modulation	Mode	RB size	RB offset	Channel 343000	Channel 349000	Channel 355000
10MHz	DFT-OFDM	PI2BPSK	1	0	21.09	21.02	20.31
			1	51	21.70	21.08	20.89
			25	12	21.33	21.57	20.43
			50	0	21.40	21.16	20.32
		QPSK	1	0	20.64	20.56	19.95
			1	51	21.83	20.47	21.06
			25	12	20.81	21.50	19.89
			50	0	20.77	20.67	19.87
		16QAM	1	0	19.63	19.48	19.01
		64QAM	1	0	19.70	18.72	18.00
		256QAM	1	0	17.41	17.14	16.79
Bandwidth	Modulation	Mode	RB size	RB offset	Channel 343500	Channel 349000	Channel 354500
15MHz	DFT-OFDM	PI2BPSK	1	0	21.09	21.11	20.38
			1	78	21.87	21.07	21.04
			36	18	21.35	21.86	20.78
			75	0	21.25	21.31	20.54
		QPSK	1	0	20.61	20.60	20.05
			1	78	21.89	20.61	21.03
			36	18	20.96	21.69	20.30
			75	0	20.97	20.65	20.18
		16QAM	1	0	19.90	19.46	19.18
		64QAM	1	0	19.59	19.45	18.95
		256QAM	1	0	17.44	17.49	16.95
Bandwidth	Modulation	Mode	RB size	RB offset	Channel 344000	Channel 349000	Channel 354000
20MHz	DFT-OFDM	PI2BPSK	1	0	21.13	21.21	20.47
			1	105	21.19	21.02	20.74
			50	25	21.36	21.15	21.16
			100	0	21.70	21.77	20.80
		QPSK	1	0	20.67	20.50	20.01

This report shall not be reproduced except in full, without the written approval of UL Verification Services (Guangzhou) Co., Ltd, Song Shan Lake Branch

			1	105	20.62	20.39	20.36
			50	25	20.67	20.77	21.28
			100	0	21.93	21.74	20.24
		16QAM	1	0	19.82	19.89	19.30
		64QAM	1	0	19.59	19.34	18.73
		256QAM	1	0	17.81	17.60	16.62
Bandwidth	Modulation	Mode	RB size	RB offset	Channel	Channel	Channel
					344500	349000	353500
25MHz	DFT-OFDM	PI2BPSK	1	0	21.39	21.40	21.02
			1	64	21.38	21.40	21.04
			32	16	21.35	21.42	21.03
			64	0	21.36	21.42	21.04
		QPSK	1	0	20.87	20.83	20.53
			1	64	20.87	20.98	20.55
			32	16	20.89	20.85	20.53
			64	0	20.88	20.85	20.53
		16QAM	1	0	20.87	20.94	20.59
		64QAM	1	0	20.88	20.94	20.58
		256QAM	1	0	17.54	17.51	17.15
Bandwidth	Modulation	Mode	RB size	RB offset	Channel	Channel	Channel
					345000	349000	353000
30MHz	DFT-OFDM	PI2BPSK	1	0	21.31	21.35	21.04
			1	77	21.31	21.35	21.04
			36	18	21.32	21.38	21.04
			75	0	21.31	21.35	21.04
		QPSK	1	0	20.83	20.88	20.60
			1	77	20.81	20.89	20.50
			36	18	20.84	20.79	20.49
			75	0	20.82	20.90	20.61
		16QAM	1	0	20.82	20.88	20.59
		64QAM	1	0	20.83	20.86	20.61
		256QAM	1	0	17.42	17.48	17.14
Bandwidth	Modulation	Mode	RB size	RB offset	Channel	Channel	Channel
					345500	349000	352000
40MHz	DFT-OFDM	PI2BPSK	1	0	21.34	21.25	21.11
			1	105	21.34	21.24	21.13
			50	25	21.35	21.23	21.69
			100	0	21.35	21.27	21.14
		QPSK	1	0	20.87	20.95	20.72
			1	215	20.85	20.94	20.71
			108	54	20.85	21.13	21.78
			216	0	20.88	21.04	20.75
		16QAM	1	0	20.86	20.10	19.91
		64QAM	1	0	20.86	19.39	18.99
		256QAM	1	0	17.50	18.09	17.61

This report shall not be reproduced except in full, without the written approval of UL Verification Services (Guangzhou) Co., Ltd, Song Shan Lake Branch

8.1.8. NR n71

Bandwidth	Modulation	Mode	RB size	RB offset	Channel 133100	Channel 136100	Channel 139100
5MHz	DFT-OFDM	PI2BPSK	1	0	22.47	22.40	22.33
			1	24	22.40	22.53	22.33
			12	6	22.72	22.87	22.87
			25	0	22.49	22.52	22.45
		QPSK	1	0	21.80	21.97	21.89
			1	24	21.92	21.87	21.95
			12	6	22.89	22.98	22.91
			25	0	21.88	22.10	21.97
		16QAM	1	0	21.05	20.88	21.03
		64QAM	1	0	20.09	20.68	20.24
		256QAM	1	0	18.05	18.30	18.59
Bandwidth	Modulation	Mode	RB size	RB offset	Channel 133600	Channel 136100	Channel 138600
10MHz	DFT-OFDM	PI2BPSK	1	0	22.16	22.10	22.31
			1	51	22.24	22.05	22.33
			25	12	22.63	22.80	22.87
			50	0	22.05	22.19	22.34
		QPSK	1	0	21.46	21.75	21.62
			1	51	21.62	21.78	21.76
			25	12	22.74	22.74	22.78
			50	0	21.55	21.88	21.86
		16QAM	1	0	20.90	20.85	20.62
		64QAM	1	0	20.10	20.21	19.97
		256QAM	1	0	18.26	18.13	18.24
Bandwidth	Modulation	Mode	RB size	RB offset	Channel 134100	Channel 136100	Channel 138100
15MHz	DFT-OFDM	PI2BPSK	1	0	22.32	22.13	22.39
			1	78	22.15	22.29	22.20
			36	18	22.89	22.71	22.93
			75	0	22.25	22.40	22.54
		QPSK	1	0	21.84	21.66	21.95
			1	78	21.73	21.75	21.78
			36	18	22.93	23.00	22.86
			75	0	21.96	22.11	21.96
		16QAM	1	0	21.03	20.50	20.72
		64QAM	1	0	20.01	20.03	20.24
		256QAM	1	0	18.28	18.11	18.43
Bandwidth	Modulation	Mode	RB size	RB offset	Channel 134600	Channel 136100	Channel 137600
20MHz	DFT-OFDM	PI2BPSK	1	0	22.34	22.18	22.14
			1	105	22.33	22.43	22.22
			50	25	22.13	22.42	22.29
			100	0	22.77	22.82	22.98
		QPSK	1	0	21.77	21.69	21.77

This report shall not be reproduced except in full, without the written approval of UL Verification Services (Guangzhou) Co., Ltd, Song Shan Lake Branch

			1	105	21.90	21.81	21.85
			50	25	21.86	21.85	22.00
			100	0	22.92	22.93	22.97
		16QAM	1	0	20.97	20.56	21.07
		64QAM	1	0	20.26	20.05	20.02
		256QAM	1	0	18.08	18.27	18.27

This report shall not be reproduced except in full, without the written approval of UL Verification Services (Guangzhou) Co., Ltd, Song Shan Lake Branch

8.1.9. NR n77 (3450-3550 MHz)

Bandwidth	Modulation	Mode	RB size	RB offset	Channel 630334	Channel 633332	Channel 636334
10MHz	DFT-OFDM	PI2BPSK	1	0	22.86	23.20	22.75
			1	51	22.95	23.19	22.85
			25	12	26.43	26.78	26.33
			50	0	26.01	26.23	25.90
		QPSK	1	0	22.86	23.26	22.81
			1	51	22.86	23.19	22.90
			25	12	26.45	26.77	26.39
			50	0	25.42	25.79	25.41
		16QAM	1	0	23.08	23.44	22.98
		64QAM	1	0	22.85	23.55	23.09
		256QAM	1	0	21.87	22.46	21.99
Bandwidth	Modulation	Mode	RB size	RB offset	Channel 630500	Channel 633332	Channel 636166
15MHz	DFT-OFDM	PI2BPSK	1	0	22.78	23.20	22.69
			1	78	22.92	23.18	22.84
			36	18	26.41	26.70	26.31
			75	0	26.01	26.28	25.84
		QPSK	1	0	22.93	23.28	22.69
			1	78	23.00	23.17	22.76
			36	18	26.45	26.72	26.30
			75	0	25.48	25.79	25.36
		16QAM	1	0	23.12	23.52	23.03
		64QAM	1	0	22.86	23.19	23.01
		256QAM	1	0	22.08	22.44	21.74
Bandwidth	Modulation	Mode	RB size	RB offset	Channel 630666	Channel 633332	Channel 636000
20MHz	DFT-OFDM	PI2BPSK	1	0	22.80	23.20	22.75
			1	105	22.98	23.10	22.76
			50	25	26.52	26.69	26.26
			100	0	26.02	26.30	25.84
		QPSK	1	0	22.89	23.27	22.78
			1	105	23.09	23.11	22.73
			50	25	26.47	26.74	26.30
			100	0	25.48	25.76	25.35
		16QAM	1	0	22.85	23.47	23.01
		64QAM	1	0	23.19	23.24	23.06
		256QAM	1	0	22.12	22.23	22.00
Bandwidth	Modulation	Mode	RB size	RB offset	Channel 630834	Channel 633332	Channel 635834
25MHz	DFT-OFDM	PI2BPSK	1	0	22.80	23.13	22.80
			1	64	23.10	23.11	22.69
			32	16	26.62	26.82	26.34
			64	0	26.06	26.32	25.86
		QPSK	1	0	22.81	23.22	22.80

This report shall not be reproduced except in full, without the written approval of UL Verification Services (Guangzhou) Co., Ltd, Song Shan Lake Branch

			1	64	23.09	23.21	22.80
			32	16	26.55	26.79	26.31
			64	0	25.58	25.85	25.36
		16QAM	1	0	23.12	23.47	22.83
		64QAM	1	0	22.81	23.20	22.83
		256QAM	1	0	21.83	22.44	22.04
Bandwidth	Modulation	Mode	RB size	RB offset	Channel 631000	Channel 633332	Channel 635666
30MHz	DFT-OFDM	PI2BPSK	1	0	22.66	23.11	22.81
			1	77	23.02	22.99	22.57
			36	18	26.53	26.80	26.33
			75	0	26.09	26.28	25.87
		QPSK	1	0	22.70	23.19	22.89
			1	77	23.03	23.12	22.72
			36	18	26.56	26.78	26.34
			75	0	25.53	25.76	25.33
		16QAM	1	0	22.73	23.11	23.11
		64QAM	1	0	22.67	23.45	22.83
		256QAM	1	0	21.94	22.10	21.85
Bandwidth	Modulation	Mode	RB size	RB offset	Channel 631334	Channel 633332	Channel 635334
40MHz	DFT-OFDM	PI2BPSK	1	0	22.37	22.86	22.66
			1	105	22.69	22.68	22.37
			50	25	26.65	26.74	26.44
			100	0	26.09	26.20	25.88
		QPSK	1	0	22.40	22.91	22.68
			1	105	22.77	22.72	22.33
			50	25	26.58	26.76	26.43
			100	0	25.53	25.73	25.41
		16QAM	1	0	22.62	23.16	22.96
		64QAM	1	0	22.76	22.91	22.66
		256QAM	1	0	21.45	22.13	21.78
Bandwidth	Modulation	Mode	RB size	RB offset	Channel 631666	Channel 633332	Channel 635000
50MHz	DFT-OFDM	PI2BPSK	1	0	22.68	23.14	22.88
			1	132	22.90	22.92	22.56
			64	32	26.64	26.85	26.49
			128	0	26.16	26.29	26.00
		QPSK	1	0	22.77	23.13	22.88
			1	132	22.99	22.87	22.59
			64	32	26.77	26.88	26.56
			128	0	25.66	25.84	25.47
		16QAM	1	0	22.65	23.39	22.90
		64QAM	1	0	22.68	23.11	22.89
		256QAM	1	0	21.95	22.13	21.93
Bandwidth	Modulation	Mode	RB size	RB offset	Channel 632000	Channel 633332	Channel 634666
60MHz	DFT-OFDM	PI2BPSK	1	0	22.49	22.80	22.85

This report shall not be reproduced except in full, without the written approval of UL Verification Services (Guangzhou) Co., Ltd, Song Shan Lake Branch

			1	161	22.70	22.50	22.36
			81	40	26.75	26.76	26.58
			162	0	26.10	26.15	25.92
		QPSK	1	0	22.60	22.85	22.92
			1	161	22.75	22.56	22.57
			81	40	26.74	26.77	26.61
			162	0	25.57	25.68	25.57
		16QAM	1	0	22.79	23.02	23.16
		64QAM	1	0	22.87	23.04	23.09
		256QAM	1	0	21.78	22.05	22.17
Bandwidth	Modulation	Mode	RB size	RB offset	Channel	Channel	Channel
					632334	633332	634334
70MHz	DFT-OFDM	PI2BPSK	1	0	22.41	22.76	22.81
			1	188	22.73	22.69	22.49
			90	45	26.88	26.75	26.66
			180	0	25.86	25.83	25.67
		QPSK	1	0	22.36	22.88	22.93
			1	188	22.69	22.74	22.57
			90	45	26.85	26.68	26.79
			180	0	25.33	25.79	25.25
		16QAM	1	0	22.71	22.92	23.12
		64QAM	1	0	22.71	22.86	23.06
		256QAM	1	0	21.70	21.98	22.09
Bandwidth	Modulation	Mode	RB size	RB offset	Channel	Channel	Channel
					632666	633332	634000
80MHz	DFT-OFDM	PI2BPSK	1	0	22.08	22.28	22.53
			1	216	22.06	22.04	22.17
			108	54	26.76	26.74	26.68
			216	0	25.92	25.99	25.96
		QPSK	1	0	22.09	22.37	22.44
			1	216	22.13	22.01	22.22
			108	54	26.79	26.75	26.65
			216	0	25.47	25.47	25.47
		16QAM	1	0	22.51	22.25	22.54
		64QAM	1	0	22.76	22.42	22.86
		256QAM	1	0	21.45	21.45	21.86
Bandwidth	Modulation	Mode	RB size	RB offset	Channel	Channel	Channel
					633000	633332	633666
90MHz	DFT-OFDM	PI2BPSK	1	0	21.95	21.78	21.99
			1	244	21.73	21.77	21.92
			120	60	26.67	26.62	26.69
			240	0	25.89	25.90	25.96
		QPSK	1	0	21.98	21.96	22.03
			1	244	21.75	21.90	21.99
			120	60	26.69	26.64	26.63
			240	0	25.40	25.37	25.39
		16QAM	1	0	21.87	21.88	22.13
		64QAM	1	0	22.40	22.18	22.30

This report shall not be reproduced except in full, without the written approval of UL Verification Services (Guangzhou) Co., Ltd, Song Shan Lake Branch

		256QAM	1	0	20.69	20.64	21.49
Bandwidth	Modulation	Mode	RB size	RB offset	Channel	Channel	Channel
					N/A	633333	N/A
100MHz	DFT-OFDM	PI2BPSK	1	0	N/A	25.89	N/A
			1	272	N/A	25.90	N/A
			135	67	N/A	25.89	N/A
			270	0	N/A	25.90	N/A
		QPSK	1	0	N/A	25.42	N/A
			1	272	N/A	25.40	N/A
			135	67	N/A	25.46	N/A
			270	0	N/A	25.41	N/A
		16QAM	1	0	N/A	25.40	N/A
		64QAM	1	0	N/A	25.41	N/A
		256QAM	1	0	N/A	21.92	N/A

This report shall not be reproduced except in full, without the written approval of UL Verification Services (Guangzhou) Co., Ltd, Song Shan Lake Branch

8.1.10. NR n77 (3700-3980 MHz)

Bandwidth	Modulation	Mode	RB size	RB offset	Channel 647000	Channel 656000	Channel 665000
10MHz	DFT-OFDM	PI2BPSK	1	0	21.90	22.69	22.78
			1	51	21.58	22.67	22.72
			25	12	25.31	26.32	26.26
			50	0	24.83	25.84	25.82
		QPSK	1	0	21.63	22.70	22.66
			1	51	21.88	22.67	22.70
			25	12	25.31	26.30	26.30
			50	0	24.33	25.34	25.33
		16QAM	1	0	21.93	23.05	23.04
		64QAM	1	0	21.81	22.88	22.80
		256QAM	1	0	20.61	22.15	21.66
Bandwidth	Modulation	Mode	RB size	RB offset	Channel 647168	Channel 656000	Channel 664832
15MHz	DFT-OFDM	PI2BPSK	1	0	21.86	22.66	22.68
			1	78	21.61	22.66	22.50
			36	18	25.35	26.30	26.22
			75	0	24.90		25.69
		QPSK	1	0	21.51	22.61	22.54
			1	78	21.81	22.61	22.67
			36	18	25.37	26.25	26.20
			75	0	23.96	25.29	25.25
		16QAM	1	0	21.87	22.64	22.70
		64QAM	1	0	21.68	22.83	22.83
		256QAM	1	0	20.87	21.73	21.92
Bandwidth	Modulation	Mode	RB size	RB offset	Channel 647334	Channel 656000	Channel 664666
20MHz	DFT-OFDM	PI2BPSK	1	0	21.87	22.64	22.68
			1	105	21.58	22.51	22.46
			50	25	25.41	26.28	26.23
			100	0	24.86	25.78	25.71
		QPSK	1	0	21.54	22.61	22.43
			1	105	21.81	22.62	22.64
			50	25	25.35	26.27	26.24
			100	0	24.34	25.26	25.16
		16QAM	1	0	21.79	22.89	22.75
		64QAM	1	0	21.61	22.98	22.52
		256QAM	1	0	20.56	22.18	21.72
Bandwidth	Modulation	Mode	RB size	RB offset	Channel 647501	Channel 656000	Channel 664499
25MHz	DFT-OFDM	PI2BPSK	1	0	21.36	22.13	22.16
			1	64	21.31	22.17	21.79
			32	16	25.47	25.74	25.67
			64	0	24.90	25.21	25.13
		QPSK	1	0	21.42	22.11	21.85

This report shall not be reproduced except in full, without the written approval of UL Verification Services (Guangzhou) Co., Ltd, Song Shan Lake Branch

			1	64	21.39	22.23	22.24
			32	16	25.14	25.72	25.65
			64	0	24.09	24.65	24.61
		16QAM	1	0	21.44	22.27	22.01
		64QAM	1	0	21.22	21.83	21.73
		256QAM	1	0	20.59	21.14	21.25
Bandwidth	Modulation	Mode	RB size	RB offset	Channel 647666	Channel 656000	Channel 664332
30MHz	DFT-OFDM	PI2BPSK	1	0	21.25	21.94	22.02
			1	77	21.25	22.09	21.80
			36	18	25.18	25.75	25.69
			75	0	24.60	25.21	25.17
		QPSK	1	0	21.24	22.00	21.79
			1	77	21.19	22.06	22.01
			36	18	25.10	25.72	25.67
			75	0	24.07	24.69	24.64
		16QAM	1	0	21.50	21.79	21.93
		64QAM	1	0	21.60	22.35	21.83
		256QAM	1	0	20.43	20.92	20.79
Bandwidth	Modulation	Mode	RB size	RB offset	Channel 648000	Channel 656000	Channel 664000
40MHz	DFT-OFDM	PI2BPSK	1	0	21.14	21.85	21.96
			1	105	21.32	22.08	21.65
			50	25	25.18	25.79	25.66
			100	0	24.57	25.25	25.08
		QPSK	1	0	21.13	21.85	21.63
			1	105	21.38	22.14	21.87
			50	25	25.19	25.76	25.63
			100	0	24.05	24.73	24.59
		16QAM	1	0	21.10	21.90	21.78
		64QAM	1	0	21.62	21.75	21.70
		256QAM	1	0	20.28	20.80	20.78
Bandwidth	Modulation	Mode	RB size	RB offset	Channel 648334	Channel 656000	Channel 663666
50MHz	DFT-OFDM	PI2BPSK	1	0	21.36	22.13	22.19
			1	132	21.87	22.57	21.82
			64	32	25.21	25.83	25.66
			128	0	24.77	25.35	25.18
		QPSK	1	0	21.38	22.08	21.88
			1	132	21.96	22.46	22.20
			64	32	25.19	25.86	25.64
			128	0	24.29	24.84	24.64
		16QAM	1	0	21.61	22.15	22.20
		64QAM	1	0	21.83	22.52	22.01
		256QAM	1	0	20.37	21.28	21.13
Bandwidth	Modulation	Mode	RB size	RB offset	Channel 648668	Channel 656000	Channel 663334
60MHz	DFT-OFDM	PI2BPSK	1	0	21.22	21.87	22.04

This report shall not be reproduced except in full, without the written approval of UL Verification Services (Guangzhou) Co., Ltd, Song Shan Lake Branch

			1	161	21.89	22.47	21.71
			81	40	25.28	25.86	25.57
			162	0	24.82	25.33	25.06
		QPSK	1	0	21.22	21.96	21.75
			1	161	21.91	22.46	21.98
			81	40	25.27	25.81	25.58
			162	0	24.28	24.83	24.57
		16QAM	1	0	21.65	22.24	21.98
		64QAM	1	0	21.21	22.00	21.97
		256QAM	1	0	20.39	21.29	21.03
Bandwidth	Modulation	Mode	RB size	RB offset	Channel	Channel	Channel
					649000	656000	663000
70MHz	DFT-OFDM	PI2BPSK	1	0	21.35	21.43	21.52
			1	188	22.26	22.31	22.06
			90	45	25.42	22.69	22.49
			180	0	24.56	19.02	18.75
		QPSK	1	0	21.25	21.92	21.89
			1	188	21.99	22.41	22.06
			90	45	25.42	22.73	22.51
			180	0	24.12	18.54	18.37
		16QAM	1	0	21.59	22.19	22.29
		64QAM	1	0	21.83	22.48	22.31
		256QAM	1	0	20.30	21.33	21.23
Bandwidth	Modulation	Mode	RB size	RB offset	Channel	Channel	Channel
					649334	656000	662666
80MHz	DFT-OFDM	PI2BPSK	1	0	21.29	21.56	21.91
			1	216	22.29	22.19	22.10
			108	54	25.96	26.04	25.85
			216	0	25.30	25.26	24.91
		QPSK	1	0	21.30	21.78	21.96
			1	216	22.27	22.27	21.91
			108	54	25.93	26.01	25.78
			216	0	24.66	24.64	24.42
		16QAM	1	0	21.33	22.14	22.16
		64QAM	1	0	21.77	21.90	22.09
		256QAM	1	0	20.50	21.03	21.20
Bandwidth	Modulation	Mode	RB size	RB offset	Channel	Channel	Channel
					649668	656000	662332
90MHz	DFT-OFDM	PI2BPSK	1	0	21.11	21.60	21.81
			1	244	22.10	21.89	21.64
			120	60	25.97	25.93	25.77
			240	0	25.39	25.41	25.12
		QPSK	1	0	21.03	21.68	21.82
			1	244	22.10	21.95	21.65
			120	60	25.96	25.97	25.75
			240	0	24.57	24.63	24.34
		16QAM	1	0	21.11	21.54	21.99
		64QAM	1	0	21.07	21.62	21.86

This report shall not be reproduced except in full, without the written approval of UL Verification Services (Guangzhou) Co., Ltd, Song Shan Lake Branch

		256QAM	1	0	20.28	20.92	21.01
Bandwidth	Modulation	Mode	RB size	RB offset	Channel 650000	Channel 656000	Channel 662000
100MHz	DFT-OFDM	PI2BPSK	1	0	20.90	21.62	21.69
			1	272	21.74	21.84	21.68
			135	67	26.23	26.29	26.15
			270	0	25.54	25.64	25.42
		QPSK	1	0	20.95	21.67	21.81
			1	272	21.73	21.87	21.66
			135	67	26.24	26.30	26.15
			270	0	25.01	25.17	24.97
		16QAM	1	0	21.17	21.88	22.04
		64QAM	1	0	21.18	21.94	22.06
		256QAM	1	0	20.12	20.88	21.01

This report shall not be reproduced except in full, without the written approval of UL Verification Services (Guangzhou) Co., Ltd, Song Shan Lake Branch

For Peak-to-Average Ratio, 26dB Bandwidth and Occupied Bandwidth, Band Edge, Conducted Spurious Emission and Frequency Stability data, please refer to document named “4791041023-1-RF-9_conduction data”

This report shall not be reproduced except in full, without the written approval of UL Verification Services (Guangzhou) Co., Ltd, Song Shan Lake Branch

9. RADIATED SPURIOUS EMISSIONS

LIMITS

FCC: §27.53 (m) (n7/41)
At least 55+10 log (P) dB on all frequencies more than X megahertz from the channel edge, where X is the greater of 6 megahertz or the actual emission bandwidth as defined in paragraph (m)(6) of this section.

FCC: §27.53 (g) (n71)
The power of any emission outside of the authorized operating frequency ranges must be attenuated below the transmitting power (P) by a factor of at least 43 +10 log (P) dB.

FCC: §24.238(a) (n2/25)
The power of any emission outside of the authorized operating frequency ranges must be attenuated below the transmitting power (P) by a factor of at least 43 + 10 l0g (P) dB.

FCC: §27.53(h) (n66)
The power of any emission outside of the authorized operating frequency ranges must be attenuated below the transmitting power (P) by a factor of at least 43 + 10 l0g (P) dB.

FCC: §22.917(a) (n5)
The power of any emission outside of the authorized operating frequency ranges must be attenuated below the transmitting power (P) by a factor of at least 43 + 10 l0g (P) dB.

FCC: §27.53 (n77)
(n) 3.45 GHz Service. The following emission limits apply to stations transmitting in the 3450-3550 MHz band.
(2) For mobile operations in the 3450-3550 MHz band, the conducted power of any emission outside the licensee's authorized bandwidth shall not exceed -13 dBm/MHz.

This report shall not be reproduced except in full, without the written approval of UL Verification Services (Guangzhou) Co., Ltd, Song Shan Lake Branch

TEST PROCEDURE

Following the test configuration shown below, radiated emissions measured directly from the EUT and convert the measured field strength or received power to ERP or EIRP, as required, for comparison to the applicable limits. As stated in section 5.5.1 of ANSI C63.26-2015. The field strength measurement method by using a test site validated to the requirement of ANSI C63.4 is an alternative method to the substitution measurement.

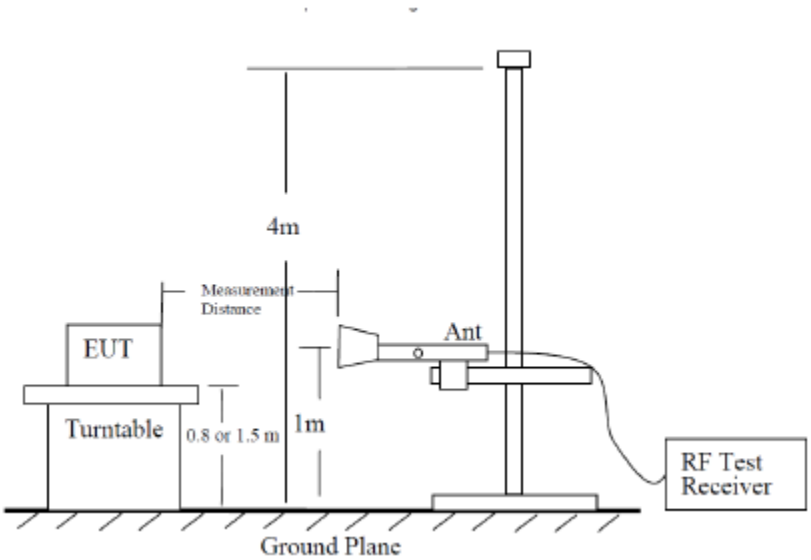

Radiated Power Measurement Calculation According to ANSI C63.26-2015

a) E (dBμV/m) = Measured amplitude level (dBμV) + Cable Loss (dB)+ Antenna Factor (dB/m).
b) E (dBμV/m) = Measured amplitude level (dBm) + 107 + Cable Loss (dB) + Antenna Factor (dB/m).
c) E (dBμV/m) = EIRP (dBm) -- 20l0g(D) + 104.8, where D is the measurement distance (in the far field region) in m.
d) EIRP (dBm) = E (dBμV/m) + 20l0g(D) - 104.8, where D is the measurement distance (in the far field region) in m.

So, from d)

The measuring distance is at 3m, then 20*Log (3) = 9.5424

Then, EIRP (dBm) = E (dBμV/m) + 9.5424 - 104.8 = E (dBμV/m) - 95.2576

This report shall not be reproduced except in full, without the written approval of UL Verification Services (Guangzhou) Co., Ltd, Song Shan Lake Branch

X axis, Y axis, Z axis:

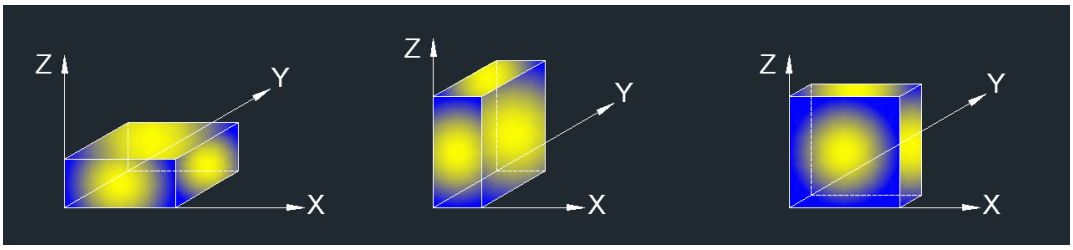

Note: The EUT was investigated in three orthogonal orientations X/Y/Z on ANT0, ANT3 and ANT4 to determine the worst-case orientation. X orientation is finally determined the worst.

This report shall not be reproduced except in full, without the written approval of UL Verification Services (Guangzhou) Co., Ltd, Song Shan Lake Branch

TEST ENVIRONMENT

Temperature	22.9°C	Relative Humidity	68.3%
Atmosphere Pressure	101kPa	Test Voltage	DC 3.87 V

RESULTS

9.1.1. NR n2

20M BPSK-Low Channel- Horizontal

No.	Frequency (MHz)	Reading (dBuV)	Correct (dB/m)	Result (dBuV/m)	Limit (dBuV/m)	Margin (dB)	Remark
1	5655.000	41.27	1.29	42.56	82.25	-39.69	peak
2	8235.000	39.22	6.56	45.78	82.25	-36.47	peak
3	9150.000	37.47	10.54	48.01	82.25	-34.24	peak
4	11700.000	35.65	17.14	52.79	82.25	-29.46	peak
5	14025.000	33.63	21.86	55.49	82.25	-26.76	peak
6	17970.000	29.79	25.51	55.30	82.25	-26.95	peak

20M BPSK-Low Channel-Vertical

No.	Frequency (MHz)	Reading (dBuV)	Correct (dB/m)	Result (dBuV/m)	Limit (dBuV/m)	Margin (dB)	Remark
1	4785.000	46.35	-0.37	45.98	82.25	-36.27	peak
2	10035.000	36.72	12.08	48.80	82.25	-33.45	peak
3	11070.000	37.38	15.03	52.41	82.25	-29.84	peak
4	11790.000	35.84	17.38	53.22	82.25	-29.03	peak
5	13875.000	33.79	21.70	55.49	82.25	-26.76	peak
6	17940.000	29.90	25.34	55.24	82.25	-27.01	peak

20M BPSK-Mid Channel- Horizontal

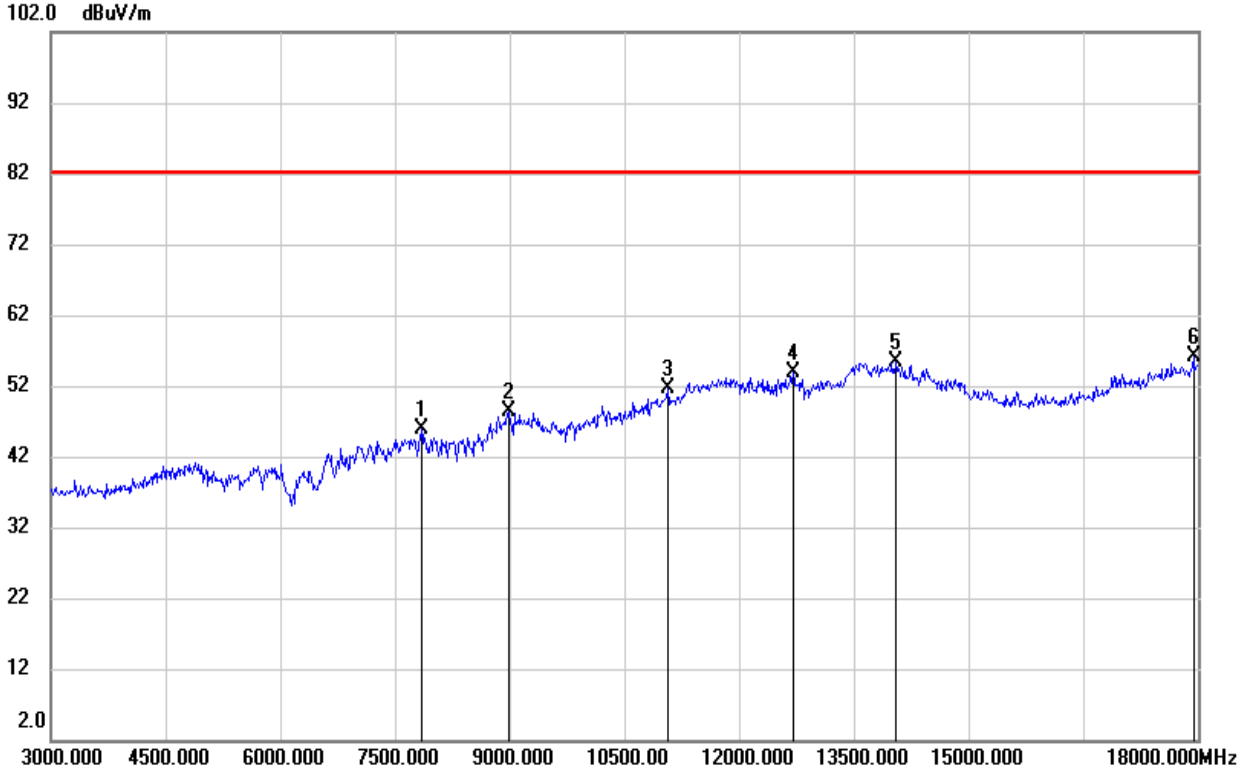

This report shall not be reproduced except in full, without the written approval of UL Verification Services (Guangzhou) Co., Ltd, Song Shan Lake Branch

No.	Frequency (MHz)	Reading (dBuV)	Correct (dB/m)	Result (dBuV/m)	Limit (dBuV/m)	Margin (dB)	Remark
1	7845.000	39.44	6.32	45.76	82.25	-36.49	peak
2	8985.000	38.06	10.37	48.43	82.25	-33.82	peak
3	11070.000	36.69	15.03	51.72	82.25	-30.53	peak
4	12705.000	35.81	18.06	53.87	82.25	-28.38	peak
5	14055.000	33.74	21.73	55.47	82.25	-26.78	peak
6	17940.000	30.67	25.34	56.01	82.25	-26.24	peak

20M BPSK- Mid Channel-Vertical

No.	Frequency (MHz)	Reading (dBuV)	Correct (dB/m)	Result (dBuV/m)	Limit (dBuV/m)	Margin (dB)	Remark
1	4800.000	46.25	-0.31	45.94	82.25	-36.31	peak
2	7965.000	42.35	6.31	48.66	82.25	-33.59	peak
3	8985.000	37.92	10.37	48.29	82.25	-33.96	peak
4	11910.000	35.69	17.72	53.41	82.25	-28.84	peak
5	13635.000	34.34	21.19	55.53	82.25	-26.72	peak
6	17685.000	31.08	23.82	54.90	82.25	-27.35	peak

20M BPSK-High Channel- Horizontal

No.	Frequency (MHz)	Reading (dBuV)	Correct (dB/m)	Result (dBuV/m)	Limit (dBuV/m)	Margin (dB)	Remark
1	3735.000	61.09	-4.41	56.68	82.25	-25.57	peak
2	9135.000	37.96	10.55	48.51	82.25	-33.74	peak
3	11835.000	35.93	17.51	53.44	82.25	-28.81	peak
4	12255.000	36.51	17.78	54.29	82.25	-27.96	peak
5	13680.000	34.42	21.29	55.71	82.25	-26.54	peak
6	18000.000	29.74	25.69	55.43	82.25	-26.82	peak

20M BPSK- High Channel-Vertical

No.	Frequency (MHz)	Reading (dBuV)	Correct (dB/m)	Result (dBuV/m)	Limit (dBuV/m)	Margin (dB)	Remark
1	4770.000	44.24	-0.43	43.81	82.25	-38.44	peak
2	7980.000	41.33	6.31	47.64	82.25	-34.61	peak
3	9225.000	37.86	10.58	48.44	82.25	-33.81	peak
4	12135.000	35.30	17.86	53.16	82.25	-29.09	peak
5	13665.000	34.02	21.25	55.27	82.25	-26.98	peak
6	18000.000	29.59	25.69	55.28	82.25	-26.97	peak

Note: Limit= -13dBm+95.25=82.25 dBuV/m

This report shall not be reproduced except in full, without the written approval of UL Verification Services (Guangzhou) Co., Ltd, Song Shan Lake Branch

9.1.2. NR n5

20M BPSK-Low Channel- Horizontal

No.	Frequency (MHz)	Reading (dBuV)	Correct (dB/m)	Result (dBuV/m)	Limit (dBuV/m)	Margin (dB)	Remark
1	1162.000	56.50	-14.28	42.22	82.25	-40.03	peak
2	1468.000	55.53	-12.86	42.67	82.25	-39.58	peak
3	4735.000	41.90	-1.21	40.69	82.25	-41.56	peak
4	7048.000	37.17	6.16	43.33	82.25	-38.92	peak
5	7885.000	39.25	5.66	44.91	82.25	-37.34	peak
6	9253.000	37.60	9.83	47.43	82.25	-34.82	peak

20M BPSK-Low Channel-Vertical

No.	Frequency (MHz)	Reading (dBuV)	Correct (dB/m)	Result (dBuV/m)	Limit (dBuV/m)	Margin (dB)	Remark
1	1450.000	58.59	-12.94	45.65	82.25	-36.60	peak
2	1693.000	56.86	-12.08	44.78	82.25	-37.47	peak
3	3736.000	53.59	-5.21	48.38	82.25	-33.87	peak
4	6382.000	40.04	3.28	43.32	82.25	-38.93	peak
5	7975.000	41.19	5.64	46.83	82.25	-35.42	peak
6	8911.000	38.77	9.11	47.88	82.25	-34.37	peak

20M BPSK-Mid Channel- Horizontal

No.	Frequency (MHz)	Reading (dBuV)	Correct (dB/m)	Result (dBuV/m)	Limit (dBuV/m)	Margin (dB)	Remark
1	1243.000	52.78	-13.90	38.88	82.25	-43.37	peak
2	1531.000	52.04	-12.61	39.43	82.25	-42.82	peak
3	4834.000	40.05	-0.81	39.24	82.25	-43.01	peak
4	7048.000	36.41	6.16	42.57	82.25	-39.68	peak
5	7507.000	38.00	5.69	43.69	82.25	-38.56	peak
6	8938.000	37.02	9.31	46.33	82.25	-35.92	peak

This report shall not be reproduced except in full, without the written approval of UL Verification Services (Guangzhou) Co., Ltd, Song Shan Lake Branch

20M BPSK- Mid Channel-Vertical

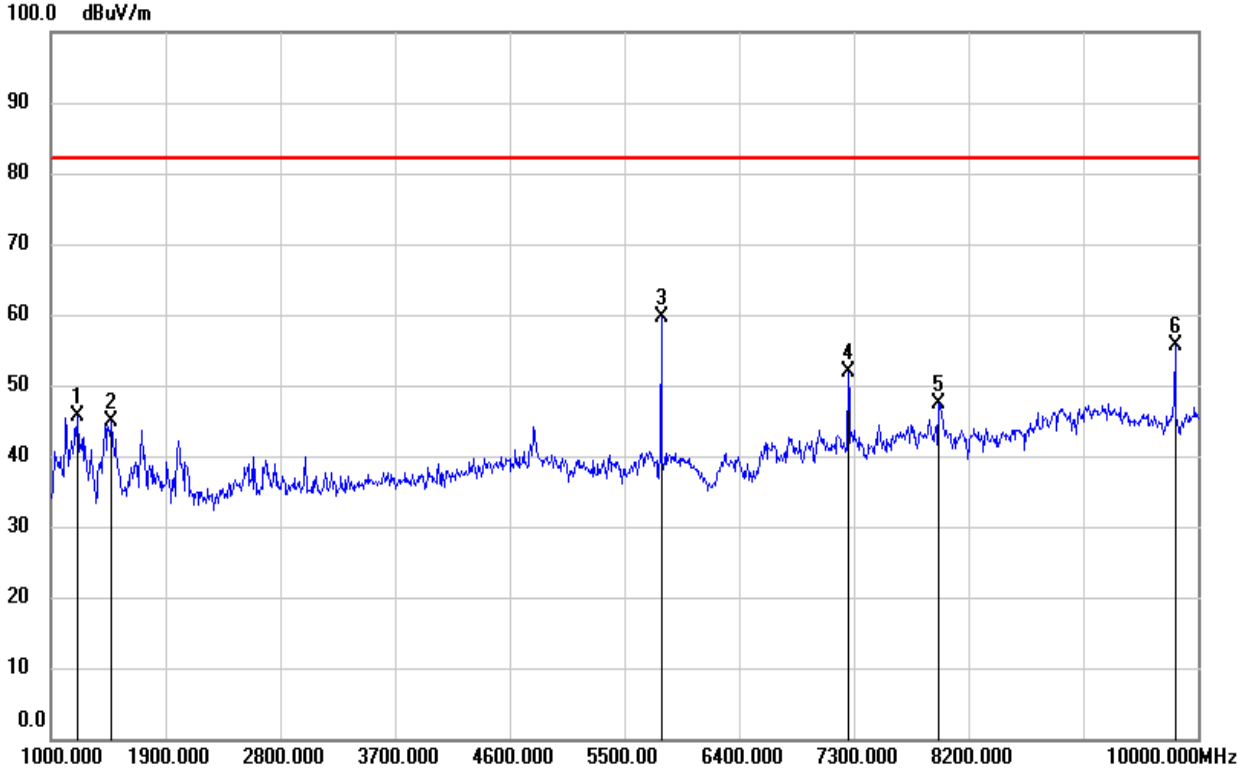

No.	Frequency (MHz)	Reading (dBuV)	Correct (dB/m)	Result (dBuV/m)	Limit (dBuV/m)	Margin (dB)	Remark
1	1207.000	59.59	-14.07	45.52	82.25	-36.73	peak
2	1477.000	57.59	-12.82	44.77	82.25	-37.48	peak
3	5788.000	58.48	1.25	59.73	82.25	-22.52	peak
4	7255.000	45.96	5.94	51.90	82.25	-30.35	peak
5	7966.000	41.80	5.65	47.45	82.25	-34.80	peak
6	9820.000	44.87	10.72	55.59	82.25	-26.66	peak

20M BPSK-High Channel- Horizontal

No.	Frequency (MHz)	Reading (dBuV)	Correct (dB/m)	Result (dBuV/m)	Limit (dBuV/m)	Margin (dB)	Remark
1	1189.000	58.75	-14.16	44.59	82.25	-37.66	peak
2	1468.000	57.96	-12.86	45.10	82.25	-37.15	peak
3	3763.000	45.90	-5.13	40.77	82.25	-41.48	peak
4	6634.000	38.33	4.38	42.71	82.25	-39.54	peak
5	7183.000	38.39	6.01	44.40	82.25	-37.85	peak
6	9388.000	38.22	9.90	48.12	82.25	-34.13	peak

20M BPSK- High Channel-Vertical

No.	Frequency (MHz)	Reading (dBuV)	Correct (dB/m)	Result (dBuV/m)	Limit (dBuV/m)	Margin (dB)	Remark
1	1117.000	59.98	-14.48	45.50	82.25	-36.75	peak
2	1423.000	57.71	-13.07	44.64	82.25	-37.61	peak
3	2008.000	53.12	-11.02	42.10	82.25	-40.15	peak
4	4780.000	43.88	-1.02	42.86	82.25	-39.39	peak
5	7975.000	42.60	5.64	48.24	82.25	-34.01	peak
6	8794.000	38.83	8.29	47.12	82.25	-35.13	peak

Note: Limit= -13dBm+95.25=82.25 dBuV/m

This report shall not be reproduced except in full, without the written approval of UL Verification Services (Guangzhou) Co., Ltd, Song Shan Lake Branch

9.1.3. NR n7

20M BPSK-Low Channel- Horizontal

No.	Frequency (MHz)	Reading (dBuV)	Correct (dB/m)	Result (dBuV/m)	Limit (dBuV/m)	Margin (dB)	Remark
1	7185.000	38.93	6.55	45.48	82.25	-36.77	peak
2	7845.000	39.36	6.32	45.68	82.25	-36.57	peak
3	9135.000	37.75	10.55	48.30	82.25	-33.95	peak
4	11730.000	36.37	17.22	53.59	82.25	-28.66	peak
5	13920.000	34.06	21.79	55.85	82.25	-26.40	peak
6	18000.000	29.82	25.69	55.51	82.25	-26.74	peak

20M BPSK-Low Channel-Vertical

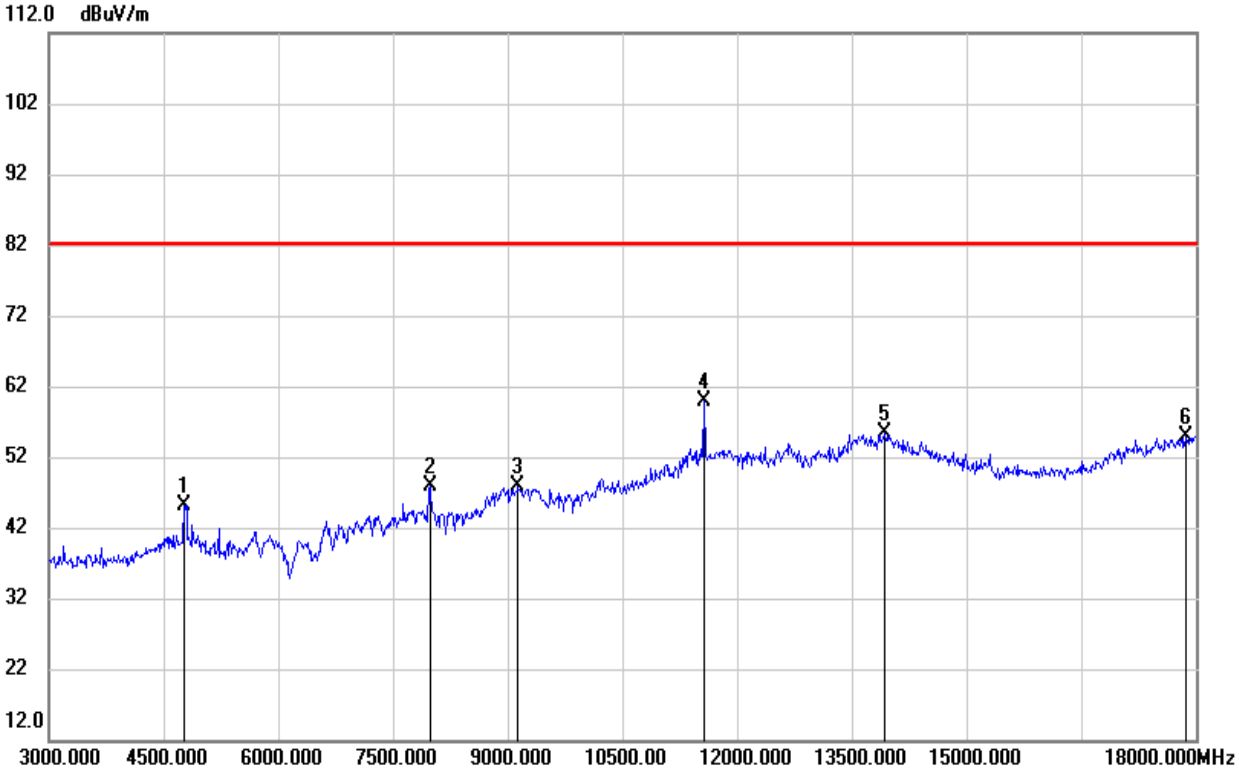

No.	Frequency (MHz)	Reading (dBuV)	Correct (dB/m)	Result (dBuV/m)	Limit (dBuV/m)	Margin (dB)	Remark
1	4770.000	45.62	-0.43	45.19	82.25	-37.06	peak
2	7980.000	41.61	6.31	47.92	82.25	-34.33	peak
3	9135.000	37.40	10.55	47.95	82.25	-34.30	peak
4	11565.000	43.15	16.77	59.92	82.25	-22.33	peak
5	13920.000	33.70	21.79	55.49	82.25	-26.76	peak
6	17865.000	29.91	24.89	54.80	82.25	-27.45	peak

20M BPSK-Mid Channel- Horizontal

No.	Frequency (MHz)	Reading (dBuV)	Correct (dB/m)	Result (dBuV/m)	Limit (dBuV/m)	Margin (dB)	Remark
1	3975.000	46.29	-3.86	42.43	82.25	-39.82	peak
2	5865.000	40.89	1.88	42.77	82.25	-39.48	peak
3	9135.000	38.21	10.55	48.76	82.25	-33.49	peak
4	11655.000	36.39	17.01	53.40	82.25	-28.85	peak
5	13860.000	34.05	21.67	55.72	82.25	-26.53	peak
6	17985.000	30.15	25.60	55.75	82.25	-26.50	peak

This report shall not be reproduced except in full, without the written approval of UL Verification Services (Guangzhou) Co., Ltd, Song Shan Lake Branch

20M BPSK- Mid Channel-Vertical

No.	Frequency (MHz)	Reading (dBuV)	Correct (dB/m)	Result (dBuV/m)	Limit (dBuV/m)	Margin (dB)	Remark
1	3735.000	52.52	-4.41	48.11	82.25	-34.14	peak
2	4785.000	45.31	-0.37	44.94	82.25	-37.31	peak
3	7980.000	40.56	6.31	46.87	82.25	-35.38	peak
4	11910.000	36.22	17.72	53.94	82.25	-28.31	peak
5	13860.000	33.32	21.67	54.99	82.25	-27.26	peak
6	17685.000	31.03	23.82	54.85	82.25	-27.40	peak

20M BPSK-High Channel- Horizontal

No.	Frequency (MHz)	Reading (dBuV)	Correct (dB/m)	Result (dBuV/m)	Limit (dBuV/m)	Margin (dB)	Remark
1	5700.000	39.70	1.41	41.11	82.25	-41.14	peak
2	7770.000	38.61	6.31	44.92	82.25	-37.33	peak
3	9180.000	37.52	10.56	48.08	82.25	-34.17	peak
4	11895.000	35.79	17.68	53.47	82.25	-28.78	peak
5	13980.000	33.67	21.92	55.59	82.25	-26.66	peak
6	18000.000	29.82	25.69	55.51	82.25	-26.74	peak

20M BPSK- High Channel-Vertical

No.	Frequency (MHz)	Reading (dBuV)	Correct (dB/m)	Result (dBuV/m)	Limit (dBuV/m)	Margin (dB)	Remark
1	4770.000	43.49	-0.43	43.06	82.25	-39.19	peak
2	7980.000	41.52	6.31	47.83	82.25	-34.42	peak
3	9135.000	38.13	10.55	48.68	82.25	-33.57	peak
4	11595.000	36.14	16.86	53.00	82.25	-29.25	peak
5	13620.000	34.16	21.15	55.31	82.25	-26.94	peak
6	17970.000	29.73	25.51	55.24	82.25	-27.01	peak

Note: Limit= -13dBm+95.25=82.25 dBuV/m

This report shall not be reproduced except in full, without the written approval of UL Verification Services (Guangzhou) Co., Ltd, Song Shan Lake Branch

9.1.4. NR n25

20M BPSK-Low Channel- Horizontal

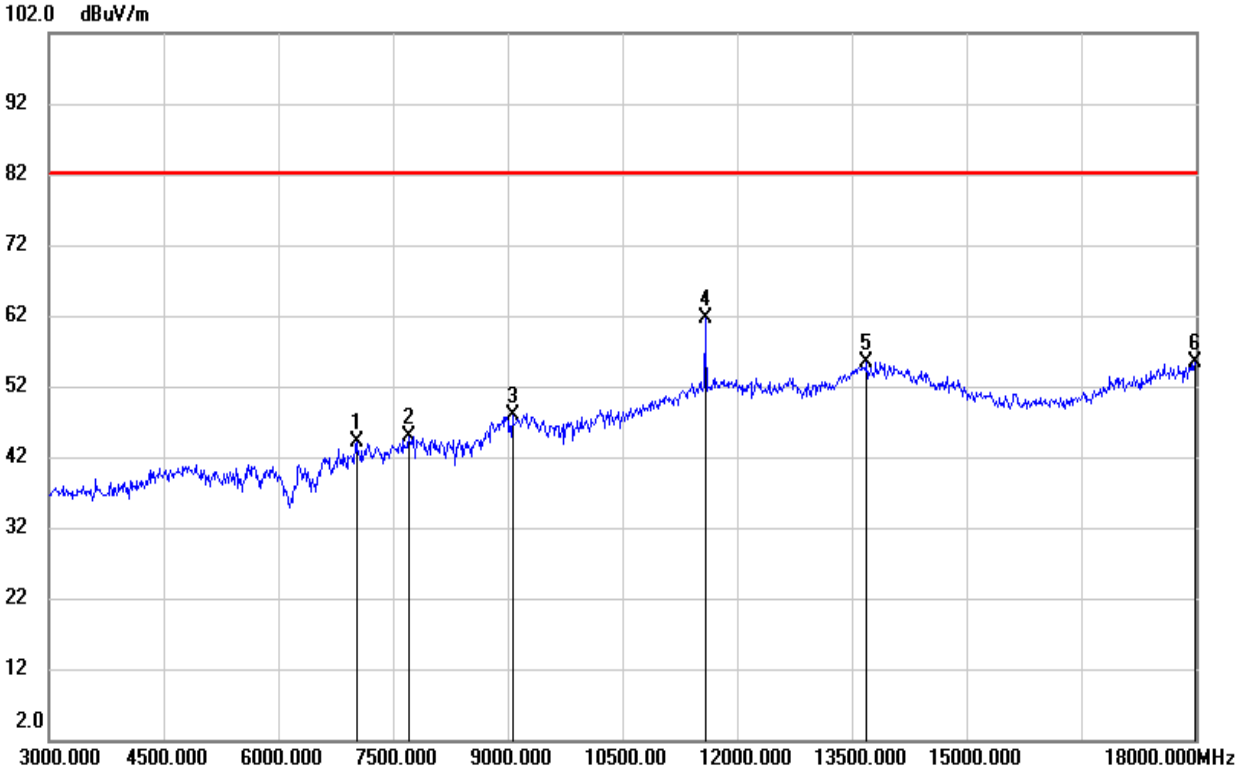

No.	Frequency (MHz)	Reading (dBuV)	Correct (dB/m)	Result (dBuV/m)	Limit (dBuV/m)	Margin (dB)	Remark
1	7020.000	37.48	6.67	44.15	82.25	-38.10	peak
2	7710.000	38.44	6.33	44.77	82.25	-37.48	peak
3	9060.000	37.39	10.51	47.90	82.25	-34.35	peak
4	11580.000	44.88	16.82	61.70	82.25	-20.55	peak
5	13695.000	34.05	21.31	55.36	82.25	-26.89	peak
6	17985.000	29.74	25.60	55.34	82.25	-26.91	peak

20M BPSK-Low Channel-Vertical

No.	Frequency (MHz)	Reading (dBuV)	Correct (dB/m)	Result (dBuV/m)	Limit (dBuV/m)	Margin (dB)	Remark
1	3750.000	56.40	-4.38	52.02	82.25	-30.23	peak
2	4800.000	46.21	-0.31	45.90	82.25	-36.35	peak
3	7965.000	41.76	6.31	48.07	82.25	-34.18	peak
4	11700.000	35.99	17.14	53.13	82.25	-29.12	peak
5	13905.000	33.71	21.76	55.47	82.25	-26.78	peak
6	17940.000	29.72	25.34	55.06	82.25	-27.19	peak

20M BPSK-Mid Channel- Horizontal

No.	Frequency (MHz)	Reading (dBuV)	Correct (dB/m)	Result (dBuV/m)	Limit (dBuV/m)	Margin (dB)	Remark
1	3750.000	45.98	-4.38	41.60	82.25	-40.65	peak
2	9240.000	37.15	10.58	47.73	82.25	-34.52	peak
3	11190.000	36.95	15.46	52.41	82.25	-29.84	peak
4	11760.000	35.93	17.31	53.24	82.25	-29.01	peak
5	13620.000	34.61	21.15	55.76	82.25	-26.49	peak
6	17910.000	31.58	25.16	56.74	82.25	-25.51	peak

This report shall not be reproduced except in full, without the written approval of UL Verification Services (Guangzhou) Co., Ltd, Song Shan Lake Branch

20M BPSK- Mid Channel-Vertical

No.	Frequency (MHz)	Reading (dBuV)	Correct (dB/m)	Result (dBuV/m)	Limit (dBuV/m)	Margin (dB)	Remark
1	4785.000	44.86	-0.37	44.49	82.25	-37.76	peak
2	7965.000	41.18	6.31	47.49	82.25	-34.76	peak
3	9225.000	37.47	10.58	48.05	82.25	-34.20	peak
4	11790.000	35.91	17.38	53.29	82.25	-28.96	peak
5	13650.000	34.48	21.21	55.69	82.25	-26.56	peak
6	17655.000	31.60	23.64	55.24	82.25	-27.01	peak

20M BPSK-High Channel- Horizontal

No.	Frequency (MHz)	Reading (dBuV)	Correct (dB/m)	Result (dBuV/m)	Limit (dBuV/m)	Margin (dB)	Remark
1	3975.000	46.44	-3.86	42.58	82.25	-39.67	peak
2	7815.000	39.02	6.32	45.34	82.25	-36.91	peak
3	9255.000	37.25	10.59	47.84	82.25	-34.41	peak
4	11850.000	35.50	17.56	53.06	82.25	-29.19	peak
5	13590.000	34.14	21.09	55.23	82.25	-27.02	peak
6	17985.000	29.58	25.60	55.18	82.25	-27.07	peak

20M BPSK- High Channel-Vertical

No.	Frequency (MHz)	Reading (dBuV)	Correct (dB/m)	Result (dBuV/m)	Limit (dBuV/m)	Margin (dB)	Remark
1	3720.000	49.68	-4.45	45.23	82.25	-37.02	peak
2	4785.000	47.06	-0.37	46.69	82.25	-35.56	peak
3	7965.000	41.74	6.31	48.05	82.25	-34.20	peak
4	11400.000	36.98	16.23	53.21	82.25	-29.04	peak
5	13530.000	34.67	20.96	55.63	82.25	-26.62	peak
6	17940.000	30.19	25.34	55.53	82.25	-26.72	peak

Note: Limit= -13dBm+95.25=82.25 dBuV/m

This report shall not be reproduced except in full, without the written approval of UL Verification Services (Guangzhou) Co., Ltd, Song Shan Lake Branch

9.1.5. NR n41

100M BPSK-Low Channel- Horizontal

No.	Frequency (MHz)	Reading (dBuV)	Correct (dB/m)	Result (dBuV/m)	Limit (dBuV/m)	Margin (dB)	Remark
1	6030.000	39.75	2.37	42.12	82.25	-40.13	peak
2	7635.000	40.00	6.33	46.33	82.25	-35.92	peak
3	9240.000	38.09	10.58	48.67	82.25	-33.58	peak
4	11910.000	35.91	17.72	53.63	82.25	-28.62	peak
5	14025.000	33.62	21.86	55.48	82.25	-26.77	peak
6	17955.000	29.79	25.42	55.21	82.25	-27.04	peak

100M BPSK-Low Channel-Vertical

No.	Frequency (MHz)	Reading (dBuV)	Correct (dB/m)	Result (dBuV/m)	Limit (dBuV/m)	Margin (dB)	Remark
1	4770.000	44.60	-0.43	44.17	82.25	-38.08	peak
2	7635.000	40.96	6.33	47.29	82.25	-34.96	peak
3	7980.000	42.81	6.31	49.12	82.25	-33.13	peak
4	11520.000	37.00	16.65	53.65	82.25	-28.60	peak
5	13605.000	34.37	21.12	55.49	82.25	-26.76	peak
6	18000.000	29.74	25.69	55.43	82.25	-26.82	peak

BPSK-Mid Channel- Horizontal

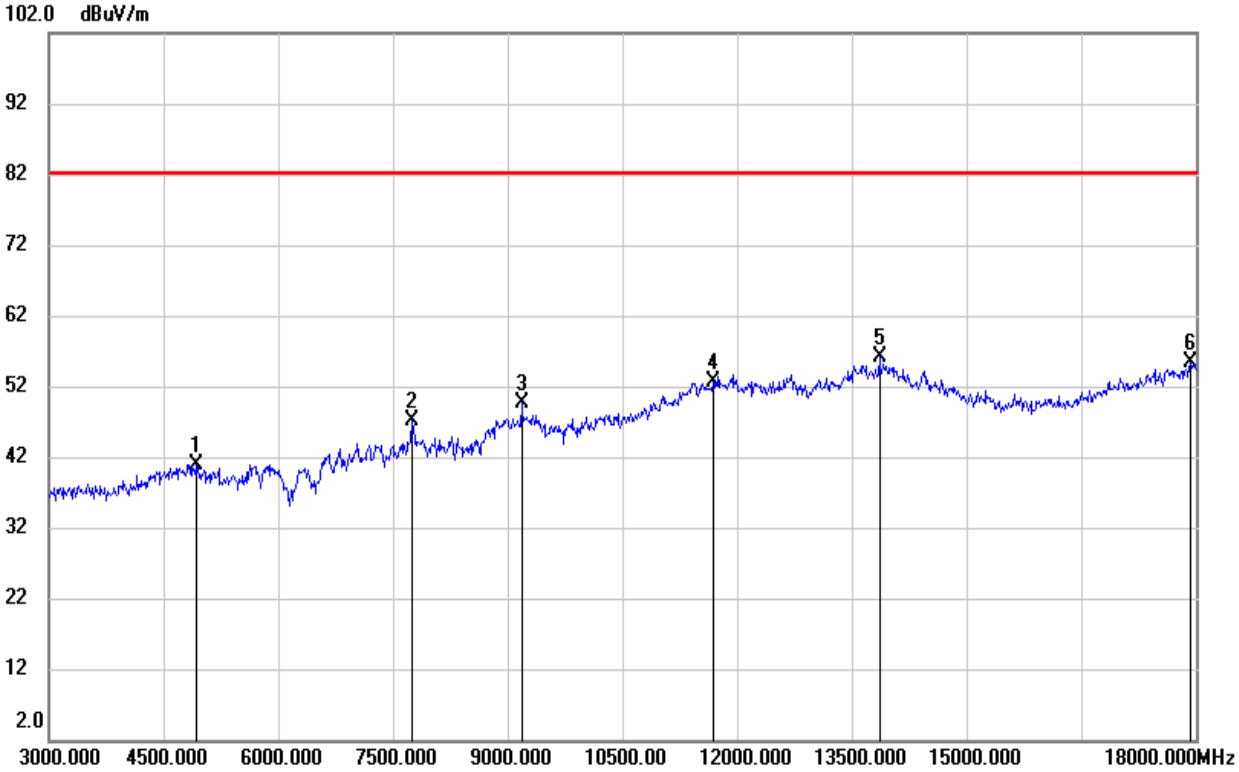

No.	Frequency (MHz)	Reading (dBuV)	Correct (dB/m)	Result (dBuV/m)	Limit (dBuV/m)	Margin (dB)	Remark
1	4920.000	40.76	0.14	40.90	82.25	-41.35	peak
2	7740.000	40.89	6.32	47.21	82.25	-35.04	peak
3	9180.000	39.17	10.56	49.73	82.25	-32.52	peak
4	11685.000	35.53	17.10	52.63	82.25	-29.62	peak
5	13860.000	34.53	21.67	56.20	82.25	-26.05	peak
6	17925.000	30.05	25.25	55.30	82.25	-26.95	peak

This report shall not be reproduced except in full, without the written approval of UL Verification Services (Guangzhou) Co., Ltd, Song Shan Lake Branch

100M BPSK- Mid Channel-Vertical

No.	Frequency (MHz)	Reading (dBuV)	Correct (dB/m)	Result (dBuV/m)	Limit (dBuV/m)	Margin (dB)	Remark
1	4785.000	45.45	-0.37	45.08	82.25	-37.17	peak
2	7770.000	43.03	6.31	49.34	82.25	-32.91	peak
3	8940.000	38.07	10.04	48.11	82.25	-34.14	peak
4	11760.000	36.11	17.31	53.42	82.25	-28.83	peak
5	13875.000	33.90	21.70	55.60	82.25	-26.65	peak
6	17760.000	31.54	24.27	55.81	82.25	-26.44	peak

100M BPSK-High Channel- Horizontal

No.	Frequency (MHz)	Reading (dBuV)	Correct (dB/m)	Result (dBuV/m)	Limit (dBuV/m)	Margin (dB)	Remark
1	4680.000	41.75	-0.77	40.98	82.25	-41.27	peak
2	7905.000	41.92	6.31	48.23	82.25	-34.02	peak
3	11010.000	36.78	14.81	51.59	82.25	-30.66	peak
4	11880.000	35.84	17.63	53.47	82.25	-28.78	peak
5	13620.000	33.84	21.15	54.99	82.25	-27.26	peak
6	18000.000	29.66	25.69	55.35	82.25	-26.90	peak

100M BPSK- High Channel-Vertical

No.	Frequency (MHz)	Reading (dBuV)	Correct (dB/m)	Result (dBuV/m)	Limit (dBuV/m)	Margin (dB)	Remark
1	3735.000	46.54	-4.41	42.13	82.25	-40.12	peak
2	4785.000	45.40	-0.37	45.03	82.25	-37.22	peak
3	7890.000	43.87	6.31	50.18	82.25	-32.07	peak
4	11835.000	35.58	17.51	53.09	82.25	-29.16	peak
5	13650.000	33.93	21.21	55.14	82.25	-27.11	peak
6	17985.000	29.88	25.60	55.48	82.25	-26.77	peak

Note: Limit= -13dBm+95.25=82.25 dBuV/m

This report shall not be reproduced except in full, without the written approval of UL Verification Services (Guangzhou) Co., Ltd, Song Shan Lake Branch

9.1.6. NR n66

40M BPSK-Low Channel- Horizontal

No.	Frequency (MHz)	Reading (dBuV)	Correct (dB/m)	Result (dBuV/m)	Limit (dBuV/m)	Margin (dB)	Remark
1	4590.000	42.35	-1.12	41.23	82.25	-41.02	peak
2	7740.000	38.71	6.32	45.03	82.25	-37.22	peak
3	9300.000	37.33	10.61	47.94	82.25	-34.31	peak
4	11880.000	35.16	17.63	52.79	82.25	-29.46	peak
5	13815.000	33.80	21.56	55.36	82.25	-26.89	peak
6	17955.000	30.19	25.42	55.61	82.25	-26.64	peak

40M BPSK-Low Channel-Vertical

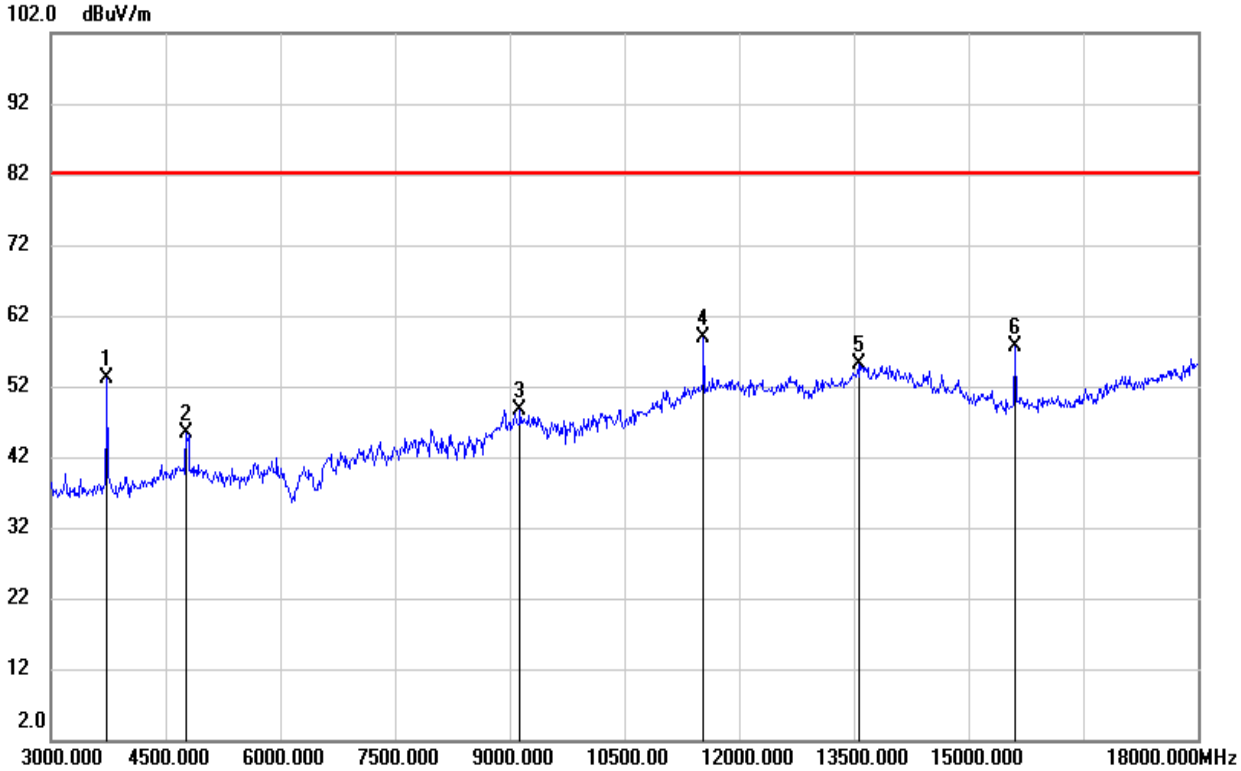

No.	Frequency (MHz)	Reading (dBuV)	Correct (dB/m)	Result (dBuV/m)	Limit (dBuV/m)	Margin (dB)	Remark
1	3735.000	57.54	-4.41	53.13	82.25	-29.12	peak
2	4770.000	45.93	-0.43	45.50	82.25	-36.75	peak
3	9135.000	38.17	10.55	48.72	82.25	-33.53	peak
4	11535.000	42.21	16.70	58.91	82.25	-23.34	peak
5	13560.000	34.06	21.04	55.10	82.25	-27.15	peak
6	15600.000	40.14	17.47	57.61	82.25	-24.64	peak

40M BPSK-Mid Channel- Horizontal

No.	Frequency (MHz)	Reading (dBuV)	Correct (dB/m)	Result (dBuV/m)	Limit (dBuV/m)	Margin (dB)	Remark
1	7635.000	39.47	6.33	45.80	82.25	-36.45	peak
2	9240.000	37.58	10.58	48.16	82.25	-34.09	peak
3	11775.000	36.21	17.35	53.56	82.25	-28.69	peak
4	13605.000	34.18	21.12	55.30	82.25	-26.95	peak
5	15630.000	39.31	17.49	56.80	82.25	-25.45	peak
6	17985.000	30.23	25.60	55.83	82.25	-26.42	peak

This report shall not be reproduced except in full, without the written approval of UL Verification Services (Guangzhou) Co., Ltd, Song Shan Lake Branch

40M BPSK- Mid Channel-Vertical

No.	Frequency (MHz)	Reading (dBuV)	Correct (dB/m)	Result (dBuV/m)	Limit (dBuV/m)	Margin (dB)	Remark
1	3180.000	50.15	-5.14	45.01	82.25	-37.24	peak
2	4800.000	44.12	-0.31	43.81	82.25	-38.44	peak
3	7980.000	42.22	6.31	48.53	82.25	-33.72	peak
4	11700.000	36.80	17.14	53.94	82.25	-28.31	peak
5	13560.000	34.86	21.04	55.90	82.25	-26.35	peak
6	17940.000	30.09	25.34	55.43	82.25	-26.82	peak

40M BPSK-High Channel- Horizontal

No.	Frequency (MHz)	Reading (dBuV)	Correct (dB/m)	Result (dBuV/m)	Limit (dBuV/m)	Margin (dB)	Remark
1	3720.000	48.14	-4.45	43.69	82.25	-38.56	peak
2	7170.000	38.00	6.56	44.56	82.25	-37.69	peak
3	9135.000	37.41	10.55	47.96	82.25	-34.29	peak
4	11670.000	36.41	17.07	53.48	82.25	-28.77	peak
5	13860.000	33.47	21.67	55.14	82.25	-27.11	peak
6	17940.000	30.18	25.34	55.52	82.25	-26.73	peak

40M BPSK- High Channel-Vertical

No.	Frequency (MHz)	Reading (dBuV)	Correct (dB/m)	Result (dBuV/m)	Limit (dBuV/m)	Margin (dB)	Remark
1	4800.000	45.19	-0.31	44.88	82.25	-37.37	peak
2	5760.000	46.66	1.58	48.24	82.25	-34.01	peak
3	7965.000	42.14	6.31	48.45	82.25	-33.80	peak
4	11670.000	35.81	17.07	52.88	82.25	-29.37	peak
5	13680.000	34.31	21.29	55.60	82.25	-26.65	peak
6	17955.000	30.50	25.42	55.92	82.25	-26.33	peak

Note: Limit= -13dBm+95.25=82.25 dBuV/m

This report shall not be reproduced except in full, without the written approval of UL Verification Services (Guangzhou) Co., Ltd, Song Shan Lake Branch

9.1.7. NR n71

20M BPSK-Low Channel- Horizontal

No.	Frequency (MHz)	Reading (dBuV)	Correct (dB/m)	Result (dBuV/m)	Limit (dBuV/m)	Margin (dB)	Remark
1	1225.000	60.10	-13.98	46.12	82.25	-36.13	peak
2	1486.000	57.32	-12.78	44.54	82.25	-37.71	peak
3	6661.000	38.04	4.52	42.56	82.25	-39.69	peak
4	7030.000	36.63	6.18	42.81	82.25	-39.44	peak
5	7822.000	39.15	5.66	44.81	82.25	-37.44	peak
6	9199.000	37.60	9.82	47.42	82.25	-34.83	peak

20M BPSK-Low Channel-Vertical

No.	Frequency (MHz)	Reading (dBuV)	Correct (dB/m)	Result (dBuV/m)	Limit (dBuV/m)	Margin (dB)	Remark
1	1216.000	59.70	-14.03	45.67	82.25	-36.58	peak
2	1477.000	55.76	-12.82	42.94	82.25	-39.31	peak
3	2485.000	53.61	-8.57	45.04	82.25	-37.21	peak
4	4780.000	43.79	-1.02	42.77	82.25	-39.48	peak
5	7975.000	41.20	5.64	46.84	82.25	-35.41	peak
6	9154.000	38.22	9.80	48.02	82.25	-34.23	peak

20M BPSK-Mid Channel- Horizontal

No.	Frequency (MHz)	Reading (dBuV)	Correct (dB/m)	Result (dBuV/m)	Limit (dBuV/m)	Margin (dB)	Remark
1	1513.000	58.51	-12.67	45.84	82.25	-36.41	peak
2	2035.000	52.13	-10.89	41.24	82.25	-41.01	peak
3	3745.000	45.44	-5.18	40.26	82.25	-41.99	peak
4	7723.000	39.40	5.67	45.07	82.25	-37.18	peak
5	8875.000	37.31	8.86	46.17	82.25	-36.08	peak
6	9244.000	38.33	9.83	48.16	82.25	-34.09	peak

This report shall not be reproduced except in full, without the written approval of UL Verification Services (Guangzhou) Co., Ltd, Song Shan Lake Branch

20M BPSK- Mid Channel-Vertical

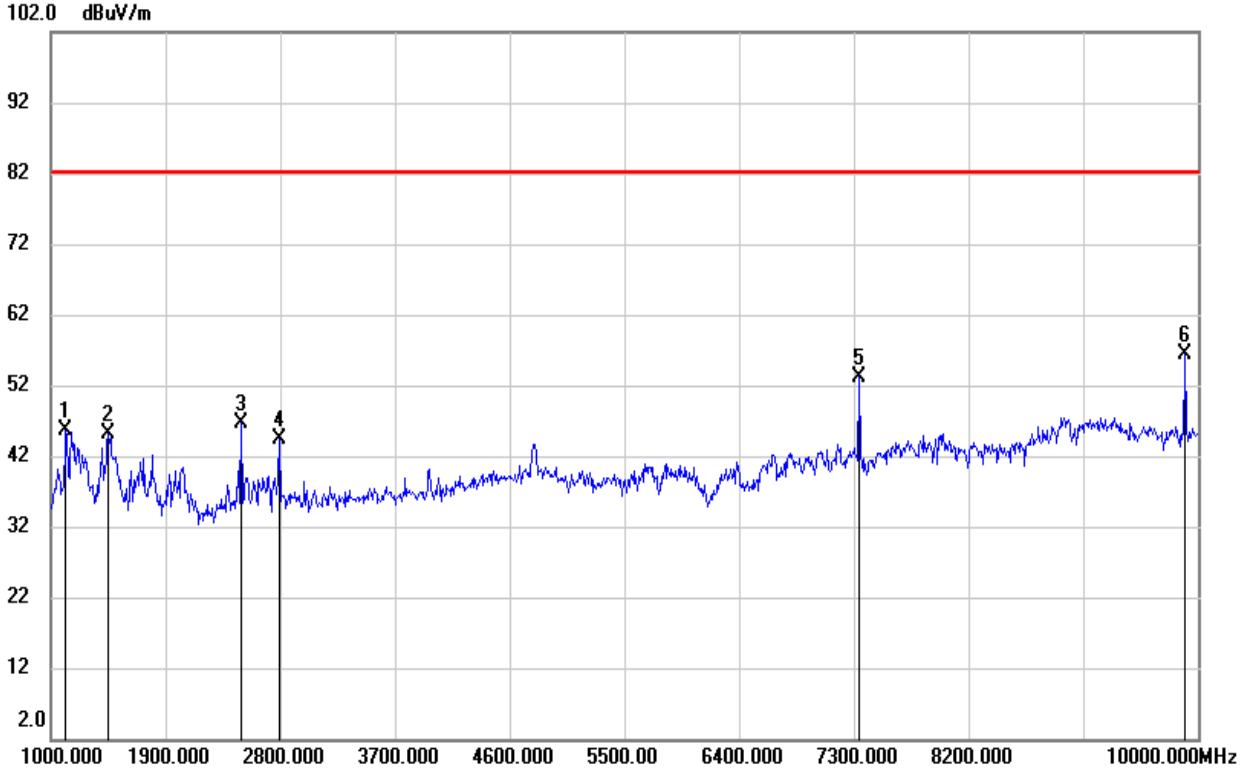

No.	Frequency (MHz)	Reading (dBuV)	Correct (dB/m)	Result (dBuV/m)	Limit (dBuV/m)	Margin (dB)	Remark
1	1117.000	60.17	-14.48	45.69	82.25	-36.56	peak
2	1450.000	58.15	-12.94	45.21	82.25	-37.04	peak
3	2494.000	55.05	-8.52	46.53	82.25	-35.72	peak
4	2791.000	51.93	-7.62	44.31	82.25	-37.94	peak
5	7345.000	47.21	5.85	53.06	82.25	-29.19	peak
6	9901.000	45.34	10.92	56.26	82.25	-25.99	peak

20M BPSK-High Channel- Horizontal

No.	Frequency (MHz)	Reading (dBuV)	Correct (dB/m)	Result (dBuV/m)	Limit (dBuV/m)	Margin (dB)	Remark
1	1207.000	60.45	-14.07	46.38	82.25	-35.87	peak
2	1495.000	57.07	-12.74	44.33	82.25	-37.92	peak
3	4879.000	41.84	-0.63	41.21	82.25	-41.04	peak
4	7300.000	37.79	5.89	43.68	82.25	-38.57	peak
5	7885.000	38.69	5.66	44.35	82.25	-37.90	peak
6	9181.000	37.84	9.81	47.65	82.25	-34.60	peak

20M BPSK- High Channel-Vertical

No.	Frequency (MHz)	Reading (dBuV)	Correct (dB/m)	Result (dBuV/m)	Limit (dBuV/m)	Margin (dB)	Remark
1	1198.000	59.35	-14.11	45.24	82.25	-37.01	peak
2	2431.000	58.11	-8.85	49.26	82.25	-32.99	peak
3	3196.000	48.36	-6.54	41.82	82.25	-40.43	peak
4	4798.000	44.44	-0.95	43.49	82.25	-38.76	peak
5	7975.000	41.46	5.64	47.10	82.25	-35.15	peak
6	9262.000	37.59	9.84	47.43	82.25	-34.82	peak

Note: Limit= -13dBm+95.25=82.25 dBuV/m

This report shall not be reproduced except in full, without the written approval of UL Verification Services (Guangzhou) Co., Ltd, Song Shan Lake Branch

9.1.8. NR n77 (3450-3550 MHz)

100M BPSK-Mid Channel- Horizontal

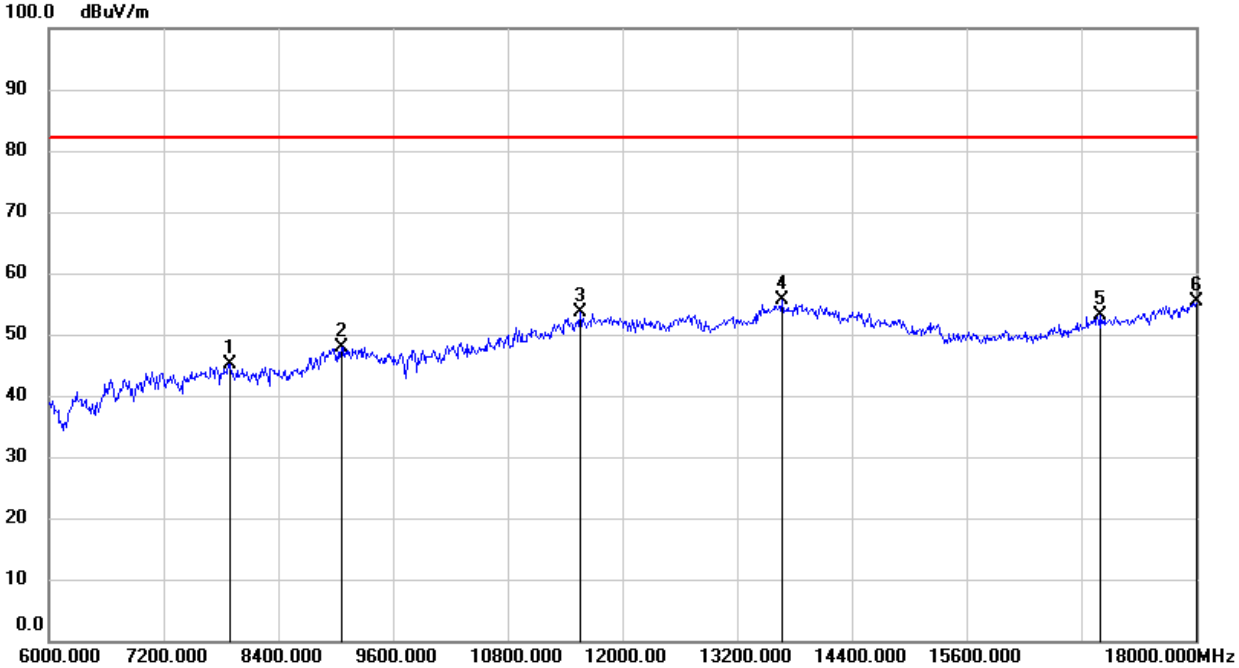

No.	Frequency (MHz)	Reading (dBuV)	Correct (dB/m)	Result (dBuV/m)	Limit (dBuV/m)	Margin (dB)	Remark
1	7896.000	38.83	6.32	45.15	82.25	-37.10	peak
2	9060.000	37.40	10.51	47.91	82.25	-34.34	peak
3	11556.000	36.80	16.75	53.55	82.25	-28.70	peak
4	13668.000	34.40	21.25	55.65	82.25	-26.60	peak
5	17004.000	32.12	20.90	53.02	82.25	-29.23	peak
6	18000.000	29.65	25.69	55.34	82.25	-26.91	peak

100M BPSK-Mid Channel-Vertical

No.	Frequency (MHz)	Reading (dBuV)	Correct (dB/m)	Result (dBuV/m)	Limit (dBuV/m)	Margin (dB)	Remark
1	7992.000	42.32	6.31	48.63	82.25	-33.62	peak
2	9144.000	37.93	10.54	48.47	82.25	-33.78	peak
3	11244.000	36.06	15.65	51.71	82.25	-30.54	peak
4	12036.000	35.29	17.94	53.23	82.25	-29.02	peak
5	13800.000	34.06	21.54	55.60	82.25	-26.65	peak
6	17856.000	30.02	24.84	54.86	82.25	-27.39	peak

This report shall not be reproduced except in full, without the written approval of UL Verification Services (Guangzhou) Co., Ltd, Song Shan Lake Branch

9.1.9. NR n77 (3700-3980 MHz)

100M BPSK-Low Channel- Horizontal

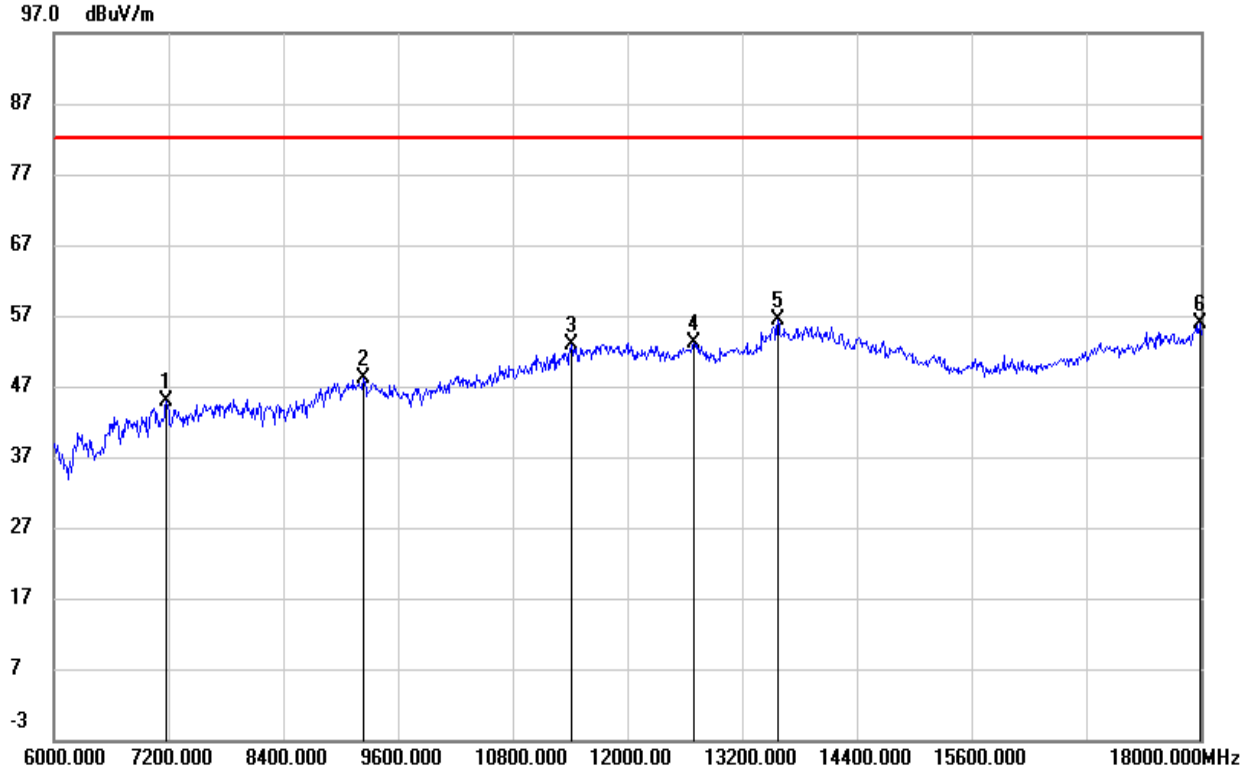

No.	Frequency (MHz)	Reading (dBuV)	Correct (dB/m)	Result (dBuV/m)	Limit (dBuV/m)	Margin (dB)	Remark
1	7176.000	38.29	6.56	44.85	82.25	-37.40	peak
2	9240.000	37.63	10.58	48.21	82.25	-34.04	peak
3	11412.000	36.51	16.28	52.79	82.25	-29.46	peak
4	12696.000	34.98	18.04	53.02	82.25	-29.23	peak
5	13572.000	35.22	21.05	56.27	82.25	-25.98	peak
6	17988.000	30.36	25.62	55.98	82.25	-26.27	peak

100M BPSK- Low Channel-Vertical

No.	Frequency (MHz)	Reading (dBuV)	Correct (dB/m)	Result (dBuV/m)	Limit (dBuV/m)	Margin (dB)	Remark
1	7992.000	41.99	6.31	48.30	82.25	-33.95	peak
2	9240.000	38.14	10.58	48.72	82.25	-33.53	peak
3	11736.000	36.21	17.24	53.45	82.25	-28.80	peak
4	13644.000	33.91	21.20	55.11	82.25	-27.14	peak
5	13980.000	33.10	21.92	55.02	82.25	-27.23	peak
6	17700.000	31.77	23.91	55.68	82.25	-26.57	peak

100M BPSK-Mid Channel- Horizontal

No.	Frequency (MHz)	Reading (dBuV)	Correct (dB/m)	Result (dBuV/m)	Limit (dBuV/m)	Margin (dB)	Remark
1	7176.000	38.21	6.56	44.77	82.25	-37.48	peak
2	7764.000	38.71	6.32	45.03	82.25	-37.22	peak
3	9240.000	37.48	10.58	48.06	82.25	-34.19	peak
4	11520.000	37.21	16.65	53.86	82.25	-28.39	peak
5	13584.000	34.72	21.09	55.81	82.25	-26.44	peak
6	17016.000	33.59	20.95	54.54	82.25	-27.71	peak

This report shall not be reproduced except in full, without the written approval of UL Verification Services (Guangzhou) Co., Ltd, Song Shan Lake Branch

100M BPSK- Mid Channel-Vertical

No.	Frequency (MHz)	Reading (dBuV)	Correct (dB/m)	Result (dBuV/m)	Limit (dBuV/m)	Margin (dB)	Remark
1	7956.000	41.71	6.30	48.01	82.25	-34.24	peak
2	9228.000	37.43	10.57	48.00	82.25	-34.25	peak
3	11772.000	35.97	17.34	53.31	82.25	-28.94	peak
4	12696.000	35.12	18.04	53.16	82.25	-29.09	peak
5	13596.000	34.26	21.10	55.36	82.25	-26.89	peak
6	17952.000	29.97	25.40	55.37	82.25	-26.88	peak

100M BPSK-High Channel- Horizontal

No.	Frequency (MHz)	Reading (dBuV)	Correct (dB/m)	Result (dBuV/m)	Limit (dBuV/m)	Margin (dB)	Remark
1	7752.000	39.67	6.31	45.98	82.25	-36.27	peak
2	9180.000	37.61	10.56	48.17	82.25	-34.08	peak
3	11520.000	35.84	16.65	52.49	82.25	-29.76	peak
4	12564.000	35.76	17.75	53.51	82.25	-28.74	peak
5	13572.000	34.32	21.05	55.37	82.25	-26.88	peak
6	17988.000	29.65	25.62	55.27	82.25	-26.98	peak

100M BPSK- High Channel-Vertical

No.	Frequency (MHz)	Reading (dBuV)	Correct (dB/m)	Result (dBuV/m)	Limit (dBuV/m)	Margin (dB)	Remark
1	7992.000	41.64	6.31	47.95	82.25	-34.30	peak
2	9252.000	37.47	10.58	48.05	82.25	-34.20	peak
3	10224.000	37.36	12.45	49.81	82.25	-32.44	peak
4	11784.000	35.96	17.37	53.33	82.25	-28.92	peak
5	14052.000	33.48	21.75	55.23	82.25	-27.02	peak
6	17940.000	30.11	25.34	55.45	82.25	-26.80	peak

Note: Limit= -13dBm+95.25=82.25 dBuV/m

This report shall not be reproduced except in full, without the written approval of UL Verification Services (Guangzhou) Co., Ltd, Song Shan Lake Branch

9.1.10. DC_2A_n41A

20M QPSK + 100M BPSK-Low Channel- Horizontal

No.	Frequency (MHz)	Reading (dBuV)	Correct (dB/m)	Result (dBuV/m)	Limit (dBuV/m)	Margin (dB)	Remark
1	3225.000	54.28	-5.11	49.17	82.25	-33.08	peak
2	4845.000	50.21	-0.15	50.06	82.25	-32.19	peak
3	9825.000	38.45	11.56	50.01	82.25	-32.24	peak
4	12585.000	33.07	17.78	50.85	82.25	-31.40	peak
5	13110.000	31.69	19.20	50.89	82.25	-31.36	peak
6	17655.000	26.11	23.64	49.75	82.25	-32.50	peak

20M QPSK + 100M BPSK-Low Channel- Vertical

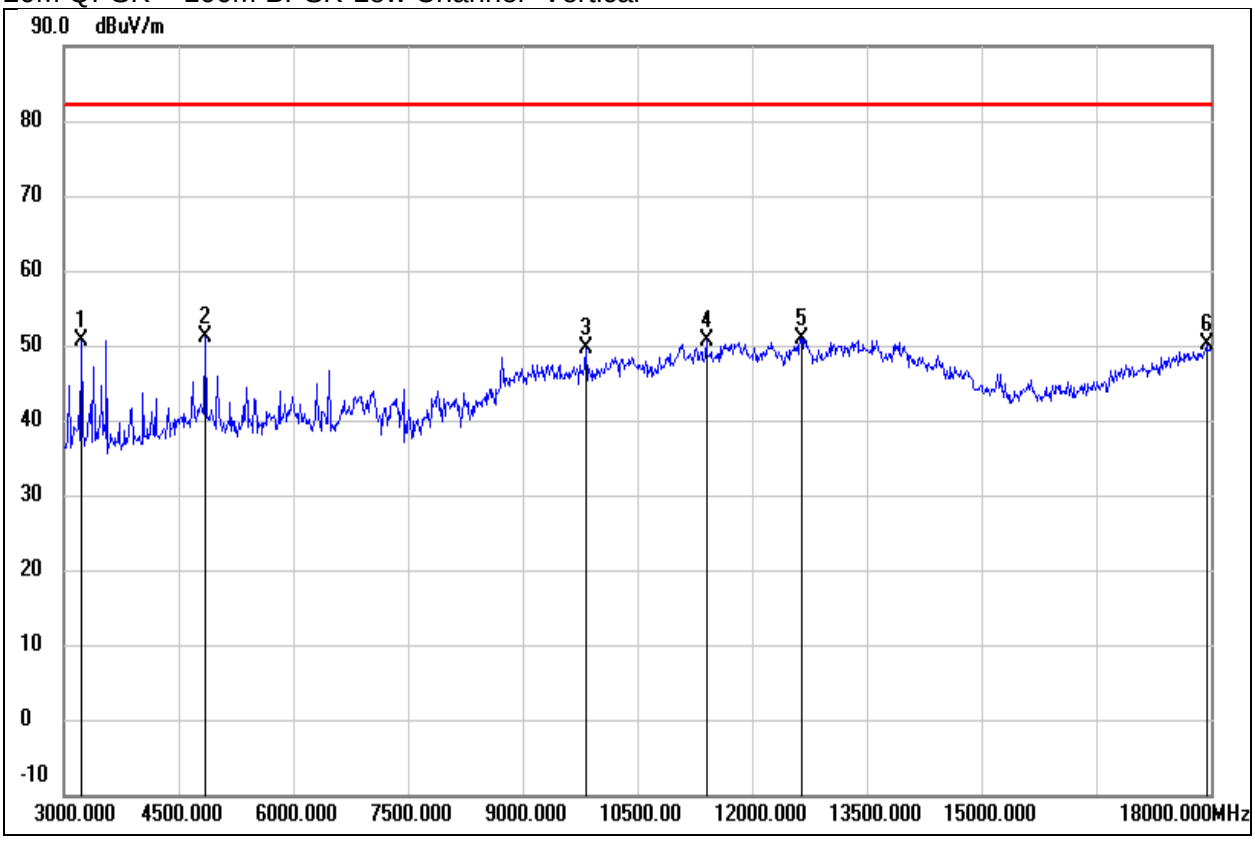

No.	Frequency (MHz)	Reading (dBuV)	Correct (dB/m)	Result (dBuV/m)	Limit (dBuV/m)	Margin (dB)	Remark
1	3225.000	55.78	-5.11	50.67	82.25	-31.58	peak
2	4845.000	51.35	-0.15	51.20	82.25	-31.05	peak
3	9825.000	38.06	11.56	49.62	82.25	-32.63	peak
4	11400.000	34.36	16.23	50.59	82.25	-31.66	peak
5	12645.000	33.02	17.92	50.94	82.25	-31.31	peak
6	17940.000	24.68	25.34	50.02	82.25	-32.23	peak

This report shall not be reproduced except in full, without the written approval of UL Verification Services (Guangzhou) Co., Ltd, Song Shan Lake Branch

9.1.11. DC_66A_n41A

20M QPSK + 100M BPSK-Low Channel- Horizontal

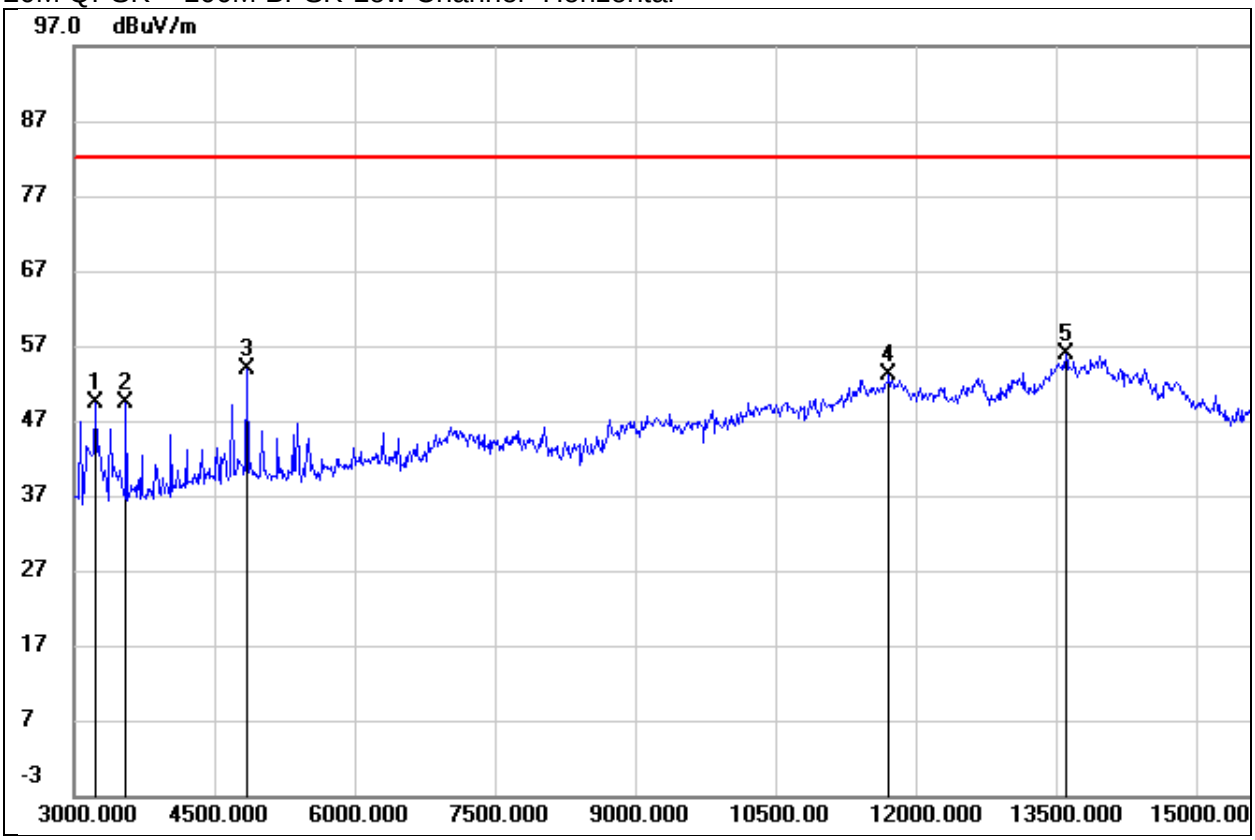

No.	Frequency (MHz)	Reading (dBuV)	Correct (dB/m)	Result (dBuV/m)	Limit (dBuV/m)	Margin (dB)	Remark
1	3225.000	54.55	-5.11	49.44	82.25	-32.81	peak
2	3555.000	54.29	-4.83	49.46	82.25	-32.79	peak
3	4845.000	54.04	-0.15	53.89	82.25	-28.36	peak
4	11715.000	36.01	17.19	53.20	82.25	-29.05	peak
5	13605.000	34.68	21.12	55.80	82.25	-26.45	peak
6	17985.000	28.97	25.60	54.57	82.25	-27.68	peak

20M QPSK + 100M BPSK-Low Channel- Vertical

No.	Frequency (MHz)	Reading (dBuV)	Correct (dB/m)	Result (dBuV/m)	Limit (dBuV/m)	Margin (dB)	Remark
1	3225.000	55.46	-5.11	50.35	82.25	-31.90	peak
2	3390.000	54.87	-5.03	49.84	82.25	-32.41	peak
3	4845.000	53.70	-0.15	53.55	82.25	-28.70	peak
4	8730.000	40.05	8.52	48.57	82.25	-33.68	peak
5	13920.000	33.92	21.79	55.71	82.25	-26.54	peak
6	17985.000	29.57	25.60	55.17	82.25	-27.08	peak

END OF REPORT

This report shall not be reproduced except in full, without the written approval of UL Verification Services (Guangzhou) Co., Ltd, Song Shan Lake Branch