TEST REPORT

Product Name : RC Cobra
Model Number : ET-0821
FCC ID : 2ADM5-ET-0821-40

Prepared for : Zeeva International Limited
Address : Suite 1007B, 10th Floor, Exchange Tower, 33 Wang Chiu Road, Kowloon Bay, Hong Kong, China

Prepared by : EMTEK (DONGGUAN) CO., LTD.
Address : -1&2/F.,Building 2, Zone A, Zhongda Marine Biotechnology Research and Development Base, No.9, Xincheng Avenue, Songshanhu High-technology Industrial Development Zone, Dongguan, Guangdong, China

TEL: +86-0769-22807078
FAX: +86-0769-22807079

Report Number : EDG2310270232E00101R
Date(s) of Tests : October 27, 2023 to November 17, 2023
Date of issue : November 17, 2023

TABLE OF CONTENTS

1 TEST RESULT CERTIFICATION 3

2 EUT TECHNICAL DESCRIPTION 4

3 SUMMARY OF TEST RESULT 5

4 TEST METHODOLOGY 6

4.1 GENERAL DESCRIPTION OF APPLIED STANDARDS 6
4.2 MEASUREMENT EQUIPMENT USED 6
4.3 DESCRIPTION OF TEST MODES 7

5 FACILITIES AND ACCREDITATIONS 8

5.1 FACILITIES 8
5.2 LABORATORY ACCREDITATIONS AND LISTINGS 8

6 TEST SYSTEM UNCERTAINTY 9

7 SETUP OF EQUIPMENT UNDER TEST 10

7.1 RADIO FREQUENCY TEST SETUP 1 10
7.2 RADIO FREQUENCY TEST SETUP 2 10
7.3 CONDUCTED EMISSION TEST SETUP 12
7.4 BLOCK DIAGRAM CONFIGURATION OF TEST SYSTEM 13
7.5 SUPPORT EQUIPMENT 13

8 TEST REQUIREMENTS 14

8.1 OCCUPIED BANDWIDTH 14
8.2 FIELD STRENGTH OF THE FUNDAMENTAL EMISSIONS AND UNWANTED EMISSIONS 16
8.3 FREQUENCY STABILITY 23
8.4 CONDUCTED EMISSION TEST 24
8.5 ANTENNA APPLICATION 25

1 TEST RESULT CERTIFICATION

Applicant	:	Zeeva International Limited
Address	:	Suite 1007B, 10th Floor, Exchange Tower, 33 Wang Chiu Road, Kowloon Bay, Hong Kong, China
Manufacture	:	Zeeva International Limited
Address	:	Suite 1007B, 10th Floor, Exchange Tower, 33 Wang Chiu Road, Kowloon Bay, Hong Kong, China
EUT	:	RC Cobra
Model	:	ET-0821
Trademark	:	N/A

Measurement Procedure Used:

APPLICABLE STANDARDS	
STANDARD	**TEST RESULT**
FCC 47 CFR Part 2, Subpart J FCC 47 CFR Part 15, Subpart C	PASS

The above equipment was tested by EMTEK(DONGGUAN) CO., LTD. The test data, data evaluation, test procedures, and equipment configurations shown in this report were made in accordance with the procedures given in ANSI C63.10-2013 and the energy emitted by the sample EUT tested as described in this report is in compliance with conducted and radiated emission limits of FCC Rules Part 15.229.

The test results of this report relate only to the tested sample identified in this report.

Date of Test :	October 27, 2023 to November 17, 2023
Prepared by :	Xia Yang Xia Yang /Editor
Reviewer :	Tim Dong Tim Dong/ Supervisor
Approved & Authorized Signer :	Sam Lv / Manager

2 EUT TECHNICAL DESCRIPTION

Characteristics	Description
Product:	RC Cobra
Model Number:	ET-0821
Sample:	1#
SKU#	9114108
UPC#	1922342343272
Color	Green
Modulation:	ASK modulation
Operating Frequency Range(s):	40.68 MHz
Number of Channels:	1 channel
Max Transmit Power:	39.55 dBuV/m
Antenna Type :	Hose antenna
Power supply:	☒ DC 3V from Battery
	☐ Adapter supply: N/A
Temperature Range	-10°C ~ +60°C

Note: *for more details, please refer to the User's manual of the EUT.*

3 SUMMARY OF TEST RESULT

FCC Part Clause	Test Parameter	Verdict	Remark
15.207	Conducted Emission	N/A	
15.209 15.229(c)	Radiated Spurious Emissions	PASS	
15.229(a)	Field Strength Emissions	PASS	
2.1049	Occupied Bandwidth	PASS	
15.229(d)	Frequency stability	PASS	
15.203	Antenna Application	PASS	
NOTE1: N/A (Not Applicable) NOTE2: The report use radiated measurements in the restricted frequency bands. In addition, the radiated test is also performed to ensure the emissions emanating from the device cabinet also comply with the applicable limits.			

RELATED SUBMITTAL(S) / GRANT(S):

This submittal(s) (test report) is intended for **FCC ID: 2ADM5-ET-0821-40** filing to comply with Section 15.229 of the FCC Part 15, Subpart C Rules.

4 TEST METHODOLOGY

4.1 GENERAL DESCRIPTION OF APPLIED STANDARDS

According to its specifications, the EUT must comply with the requirements of the following standards:
FCC 47 CFR Part 2, Subpart J
FCC 47 CFR Part 15, Subpart C

4.2 MEASUREMENT EQUIPMENT USED

4.2.1 Conducted Emission Test Equipment

Equipment	Manufacturer	Model No.	Serial No.	Last Cal.	Cal. Interval
EMI Test Receiver	Rohde&Schwarz	ESCI	100137	2023/5/11	1Year
AMN	Rohde&Schwarz	ENV216	101209	2023/5/11	1Year
AMN	Rohde&Schwarz	ENV216	100017	2023/5/11	1Year
RF Switching Unit	CDS	RSU-M2	38401	2023/5/11	1Year
AMN	Schwarzbeck	NNLK8121	8121-641	2023/5/11	1Year
AMN	Rohde&Schwarz	ESH3-Z6	101101	2023/5/11	1Year
AMN	Rohde&Schwarz	ESH3-Z6	101102	2023/5/11	1Year
Power Splitters & Dividers	Weinschel Associates	WA1506A	A1066	2023/5/11	1Year
Current Probe	FCC	F-52	8377	2023/5/11	1Year
Passive voltage probe	Rohde&Schwarz	ESH2-Z3	100122	2023/5/11	1Year

4.2.2 Radiated Emission Test Equipment

Equipment	Manufacturer	Model No.	Serial No.	Last Cal.	Cal. Interval
EMI Test Receiver	Rohde&Schwarz	ESCI	101415	2023/5/11	1Year
Bi-log Hybrid Antenna	Schwarzbeck	VULB9163	141	2023/5/15	1Year
Pre-Amplifie	HP	8447F	OPTH64	2023/5/11	1 Year
Signal Analyzer	R&S	FSV30	103039	2023/5/11	1 Year
Horn Antenna	Schwarzbeck	BBHA9120D	1272	2023/5/15	1Year
Horn Antenna	Schwarzbeck	BBHA9170	9170-567	2023/5/15	1Year
Pre-Amplifie	LUNAR EM	PM1-18-40	J10100000081	2023/5/11	1Year
Loop antenna	Schwarzbeck	FMZB1519	1519-012	2023/5/15	1Year

4.2.3 Radio Frequency Test Equipment

Item	Equipment	Manufacturer	Model No.	Serial No.	Last Cal.	Cal. Interval
1.	Signal Analyzer	R&S	FSV30	103039	2023/5/11	1 Year

Remark: *Each piece of equipment is scheduled for calibration once a year.*

4.3 DESCRIPTION OF TEST MODES

The EUT has been tested under its typical operating condition.

The EUT configuration for testing is installed on RF field strength measurement to meet the Commissions requirement and operating in a manner which intends to maximize its emission characteristics in a continuous normal application.
The Transmitter was operated in the normal operating mode. The TX frequency was fixed which was for the purpose of the measurements.

Test of channel included the lowest and middle and highest frequency to perform the test, then record on this report.

The EUT has been tested under its typical operating condition so those modulation and channel were used for all test.

Pre-defined engineering program for regulatory testing used to control the EUT for staying in continuous transmitting and receiving mode is programmed.

Test Frequency and Channel list:

Lowest Frequency		Middle Frequency		Highest Frequency	
Channel	Frequency (MHz)	Channel	Frequency (MHz)	Channel	Frequency (MHz)
/	/	0	40.68	/	/

5 FACILITIES AND ACCREDITATIONS

5.1 FACILITIES

All measurement facilities used to collect the measurement data are located at

EMTEK (Dongguan) Co., Ltd.
-1&2/F.,Building 2, Zone A, Zhongda Marine Biotechnology Research and Development Base, No.9, Xincheng Avenue, Songshanhu High-technology Industrial Development Zone, Dongguan, Guangdong, China

The sites are constructed in conformance with the requirements of ANSI C63.7, ANSI C63.10 and CISPR Publication 22.

5.2 LABORATORY ACCREDITATIONS AND LISTINGS

Site Description		
EMC Lab.	:	**Accredited by CNAS** The Laboratory has been assessed and proved to be in compliance with CNAS-CL01:2018 The Certificate Registration Number is L3150 **Accredited by FCC** Designation Number: CN1300 Test Firm Registration Number: 945551 **Accredited by A2LA** The Certificate Registration Number is 4321.02 **Accredited by Industry Canada** The Certificate Registration Number is CN0113
Name of Firm	:	EMTEK (DONGGUAN) CO., LTD.
Site Location	:	-1&2/F.,Building 2, Zone A, Zhongda Marine Biotechnology Research and Development Base, No.9, Xincheng Avenue, Songshanhu High-technology Industrial Development Zone, Dongguan, Guangdong, China

6 TEST SYSTEM UNCERTAINTY

The following measurement uncertainty levels have been estimated for tests performed on the apparatus:

Parameter	Uncertainty
Radio Frequency	±1x10^-5
Maximum Peak Output Power Test	±1.0dB
Conducted Emissions Test	±2.0dB
Radiated Emission Test	±2.0dB
Power Density	±2.0dB
Occupied Bandwidth Test	±1.0dB
Band Edge Test	±3dB
All emission, radiated	±3dB
Antenna Port Emission	±3dB
Temperature	±0.5℃
Humidity	±3%

Measurement Uncertainty for a level of Confidence of 95%

7 SETUP OF EQUIPMENT UNDER TEST

7.1 RADIO FREQUENCY TEST SETUP 1

The antenna ports(s) of the EUT are connected to the measurement instrument per an appropriate attenuator. The EUT is controlled by PC/software/itself to emit the specified signals for the purpose of measurements.

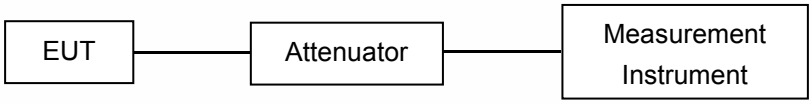

7.2 RADIO FREQUENCY TEST SETUP 2

The test site semi-anechoic chamber has met the requirement of NSA tolerance 4 dB according to the standards: ANSI C63.10. The test distance is 3m.The setup is according to the requirements in ANSI C63.10-2013 and CAN/CSA-CEI/IEC CISPR 22.

Below 30MHz：

The EUT is placed on a turntable 0.8 meters above the ground in the chamber, 3 meter away from the antenna (loop antenna). The Antenna should be positioned with its plane vertical at the specified distance from the EUT and rotated about its vertical axis for maximum response at each azimuth about the EUT. The center of the loop shall be 1 m above the ground. For certain applications, the loop antenna plane may also need to be positioned horizontally at the specified distance from the EUT.

Above 30MHz：

The EUT is placed on a turntable 0.8 meters above the ground in the chamber, 3 meter away from the antenna. The maximal emission value is acquired by adjusting the antenna height, polarisation and turntable azimuth. Normally, the height range of antenna is 1 m to 4 m, the azimuth range of turntable is 0° to 360°, and the receive antenna has two polarizations Vertical (V) and Horizontal (H).

Above 1GHz：

The EUT is placed on a turntable 1.5 meters above the ground in the chamber, 3 meter away from the antenna. The maximal emission value is acquired by adjusting the antenna height, polarisation and turntable azimuth. Normally, the height range of antenna is 1 m to 4 m, the azimuth range of turntable is 0° to 360°, and the receive antenna has two polarizations Vertical (V) and Horizontal (H).

(a) Radiated Emission Test Set-Up, Frequency Below 30MHz

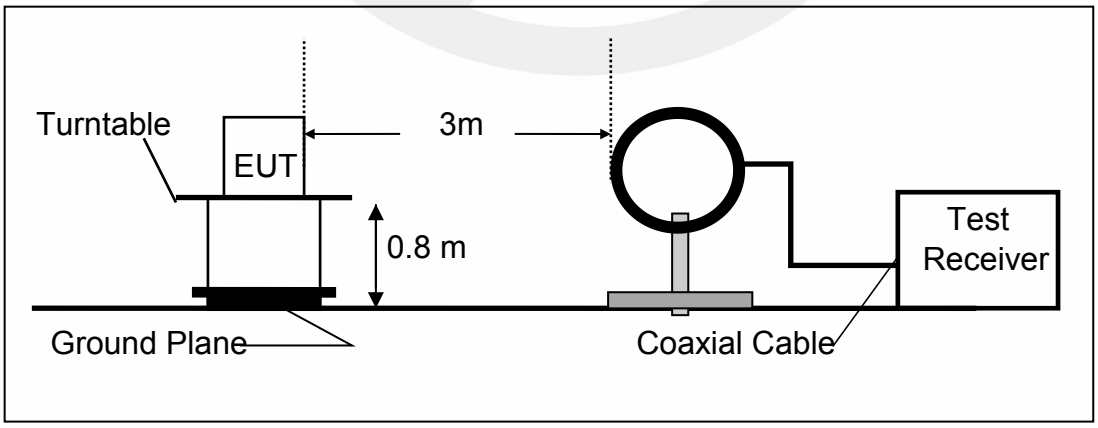

(b) Radiated Emission Test Set-Up, Frequency Below 1000MHz

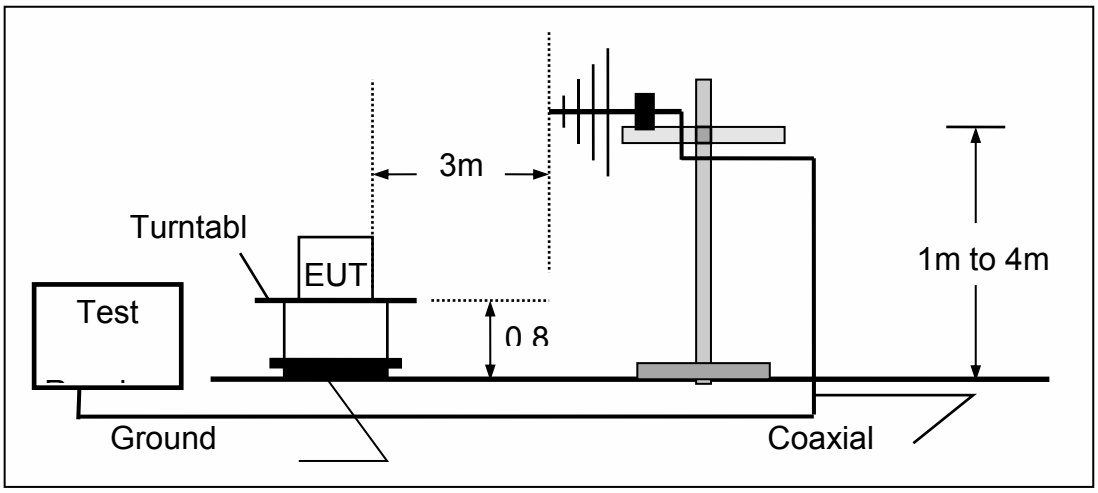

(c) Radiated Emission Test Set-Up, Frequency above 1000MHz

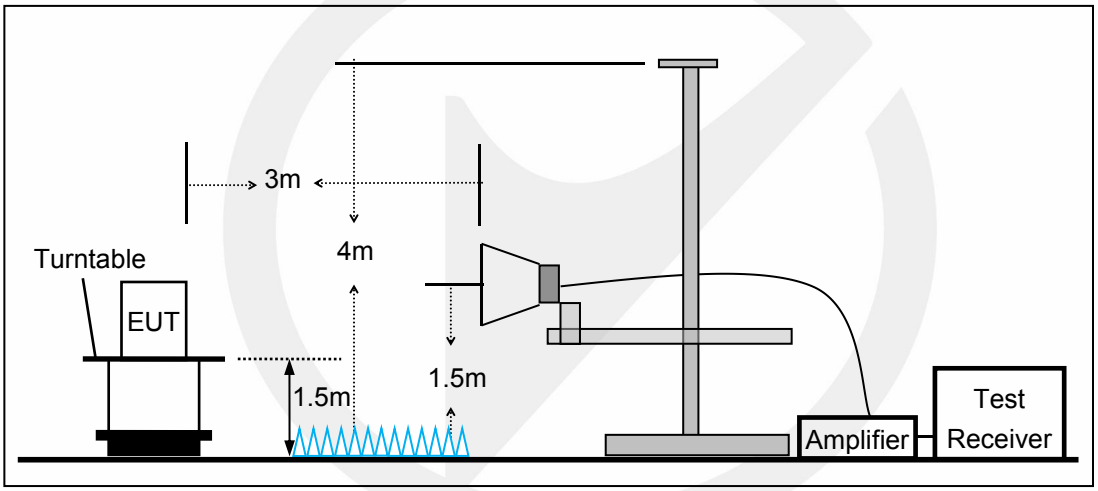

7.3 CONDUCTED EMISSION TEST SETUP

The mains cable of the EUT (maybe per AC/DC Adapter) must be connected to LISN. The LISN shall be placed 0.8 m from the boundary of EUT and bonded to a ground reference plane for LISN mounted on top of the ground reference plane. This distance is between the closest points of the LISN and the EUT. All other units of the EUT and associated equipment shall be at least 0.8m from the LISN.

Ground connections, where required for safety purposes, shall be connected to the reference ground point of the LISN and, where not otherwise provided or specified by the manufacturer, shall be of same length as the mains cable and run parallel to the mains connection at a separation distance of not more than 0.8 m.

According to the requirements in ANSI C63.10-2013 Conducted emissions from the EUT measured in the frequency range between 0.15 MHz and 30 MHz using CISPR Quasi-Peak and average detector mode.

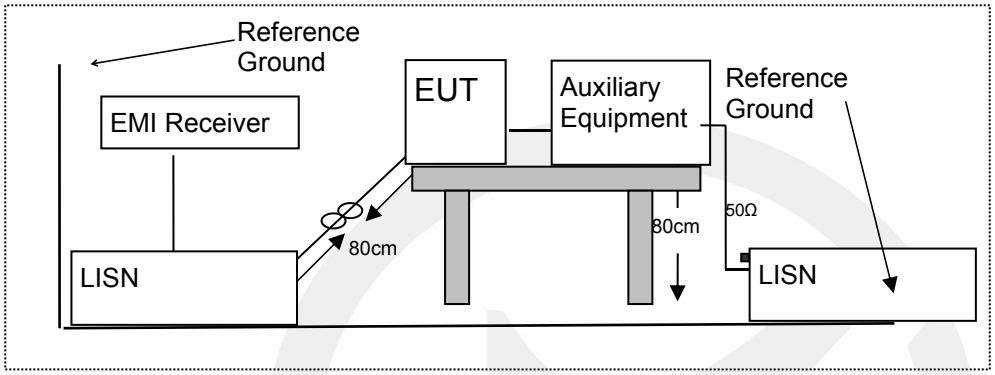

7.4 BLOCK DIAGRAM CONFIGURATION OF TEST SYSTEM

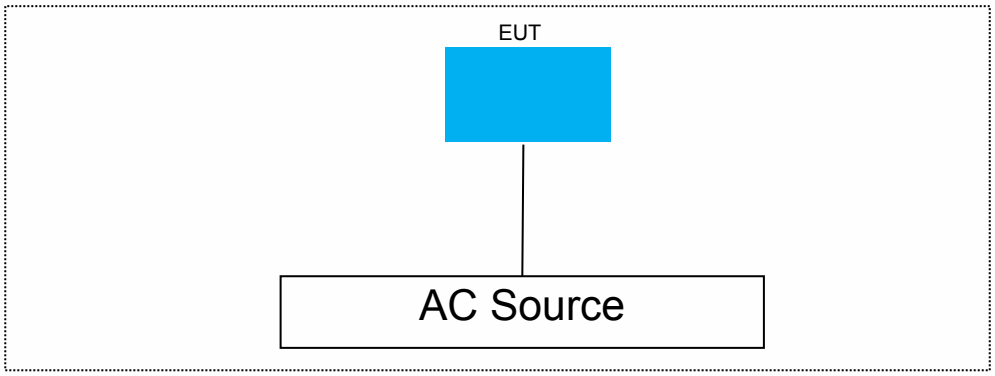

7.5 SUPPORT EQUIPMENT

EUT Cable List and Details			
Cable Description	Length (m)	Shielded/Unshielded	With / Without Ferrite
/	/	/	/

Auxiliary Cable List and Details			
Cable Description	Length (m)	Shielded/Unshielded	With / Without Ferrite
/	/	/	/

Auxiliary Equipment List and Details			
Description	Manufacturer	Model	Serial Number
/	/	/	/

Notes:

1. *All the equipment/cables were placed in the worst-case configuration to maximize the emission during the test.*
2. *Grounding was established in accordance with the manufacturer's requirements and conditions for the intended use.*

8 TEST REQUIREMENTS

8.1 OCCUPIED BANDWIDTH

8.1.1 Applicable Standard

According to FCC Part 2.1049

8.1.2 Conformance Limit

No limit requirement..

8.1.3 Test Configuration

Test according to clause 7.1 radio frequency test setup 1

8.1.4 Test Procedure

The EUT was operating in controlled its channel. Printed out the test result from the spectrum by hard copy function.
The RF output of EUT was connected to the spectrum analyzer by RF cable and attenuator. The path loss was compensated to the results for each measurement.
Set to the maximum power setting and enable the EUT transmit continuously
Set RBW ≥ 1% of the 20 dB bandwidth(1Hz)
Set the video bandwidth (VBW) ≥ RBW(3Hz).
Set Span= approximately 2 to 3 times the 20 dB bandwidth
Set Detector = Peak.
Set Trace mode = max hold.
Set Sweep = auto couple.
The resolution bandwidth (RBW) shall be in the range of 1% to 5% of the actual occupied / x dB bandwidth and the video bandwidth (VBW) shall not be smaller than three times the RBW value.
Measure the maximum width of the emission that is constrained by the frequencies associated with the two outermost amplitude points (upper and lower frequencies) that are attenuated by 20 dB relative to the maximum level measured in the fundamental emission.
Measure and record the results in the test report.

8.1.5 Test Results

Temperature:	26° C
Relative Humidity:	54%
ATM Pressure:	1011 mbar

Operation Mode	Channel Frequency (MHz)	20dB Measurement Bandwidth (Hz)	Limit (MHz)	Verdict
ASK	40.68	11.50	40.66-40.70	PASS
Note: N/A (Not Applicable)				

Test Model	20 dB Occupied Bandwidth ASK Channel : 40.68MHz

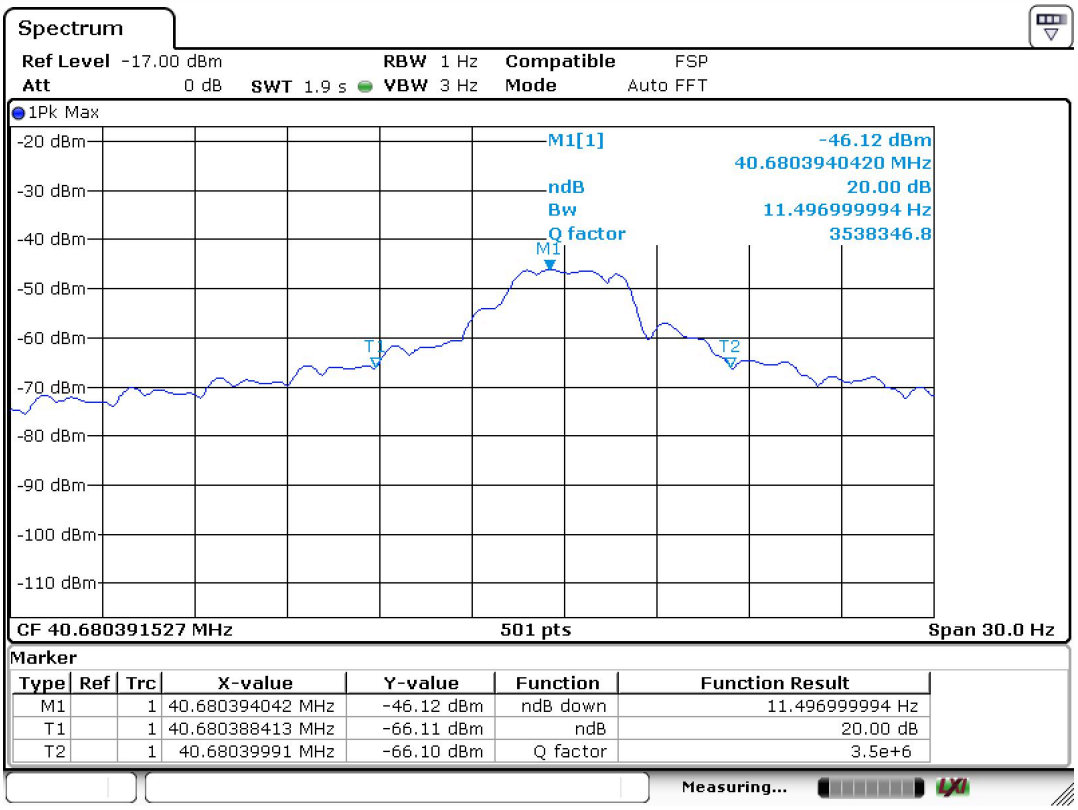

8.2 FIELD STRENGTH OF THE FUNDAMENTAL EMISSIONS AND UNWANTED EMISSIONS

8.2.1 Applicable Standard

According to FCC Part 15.209
According to FCC Part 15.229(a) and FCC Part 15.229(c)

8.2.2 Conformance Limit

The field strength of any emissions within this band shall not exceed 10 mV/m (80 dB V/m) measured at 3 m with an average meter. Alternatively, it shall not exceed 233 mV/m measured with a quasi-peak meter.

The field strength of harmonic emissions shall not exceed 225 μV/m at 3 m measured with a quasi-peak detector.

The field strength of any emissions outside the band 40.65-40.71 MHz, except harmonic emissions, shall not exceed the general field strength limits specified in RSS-Gen.

Except where otherwise indicated in the applicable RSS, radiated emissions shall comply with the field strength limits shown in table 5 and table 6. Additionally, the level of any transmitter unwanted emission shall not exceed the level of the transmitter’s fundamental emission.

Restricted Frequency(MHz)	Field Strength (μV/m)	Field Strength (dBμV/m)	Measurement Distance
0.009-0.490	2400/F(KHz)	20 log (uV/m)	300
0.490-1.705	24000/F(KHz)	20 log (uV/m)	30
1.705-30	30	29.5	30
30-88	100	40	3
88-216	150	43.5	3
216-960	200	46	3
Above 960	500	54	3

Remark :1. Emission level in dBuV/m=20 log (uV/m)
2. Measurement was performed at an antenna to the closed point of EUT distance of meters.
3. Limit line=Specific limits(dBuV) + distance extrapolation factor.
for the frequency ranges below 30 MHz, a narrower RBW is used for these ranges but the measured value should add a RBW correction factor (RBWCF) where RBWCF [dB] =10*lg(100 [kHz]/narrower RBW [kHz]). , the narrower RBW is 1 kHz and RBWCF is 20 dB for the frequency 9 kHz to 150 kHz, and the narrower RBW is 10 kHz and RBWCF is 10 dB for the frequency 150 kHz to 30 MHz.

8.2.3 Test Configuration

Test according to clause 7.2 radio frequency test setup 2

8.2.4 Test Procedure

It must be performed with the highest gain of each type of antenna proposed for use with the EUT. Use the following spectrum analyzer settings:
For Above 1GHz:
The EUT was placed on a turn table which is 1.5m above ground plane.
Maximum procedure was performed on the highest emissions to ensure EUT compliance.
Span = wide enough to fully capture the emission being measured
RBW = 1 MHz
VBW ≥ RBW
Sweep = auto
Detector function = peak
Trace = max hold
For Below 1GHz:
The EUT was placed on a turn table which is 0.8m above ground plane.
Maximum procedure was performed on the highest emissions to ensure EUT compliance.
Span = wide enough to fully capture the emission being measured
RBW = 100 kHz for
VBW ≥ RBW
Sweep = auto
Detector function = peak
Trace = max hold
For Below 30MHz:
The EUT was placed on a turn table which is 0.8m above ground plane.
Maximum procedure was performed on the highest emissions to ensure EUT compliance.
Span = wide enough to fully capture the emission being measured
RBW = 9kHz
VBW ≥ RBW
Sweep = auto
Detector function = peak
Trace = max hold
For Below 150KHz:
The EUT was placed on a turn table which is 0.8m above ground plane.
Maximum procedure was performed on the highest emissions to ensure EUT compliance.
Span = wide enough to fully capture the emission being measured
RBW = 200Hz
VBW ≥ RBW
Sweep = auto
Detector function = peak
Trace = max hold
Follow the guidelines in ANSI C63.10-2013 with respect to maximizing the emission by rotating the EUT, measuring the emission while the EUT is situated in three orthogonal planes (if appropriate), adjusting the measurement antenna height and polarization, etc. A pre-amp and a high pass filter are required for this test, in order to provide the measuring system with sufficient sensitivity. Allow the trace to stabilize. The peak reading of the emission, after being corrected by the antenna factor, cable loss, pre-amp gain, etc., is the peak field strength, which must comply with the limit. Submit this data. Now set the VBW to 10 Hz, while maintaining all of the other instrument settings. This peak level, once corrected, must comply with the limit. If the dwell time per channel of the hopping signal is less than 100 ms, then the reading obtained with the 10 Hz VBW may be further adjusted by a “duty cycle correction factor”, derived from 20log(dwell time/period), in an effort to demonstrate compliance with the limit. Submit this data.
Repeat above procedures until all frequency measured was complete.

8.2.5 Test Results

Temperature:	26° C
Relative Humidity:	54%
ATM Pressure:	1011 mbar

■ Spurious Emission below 30MHz (9KHz to30MHz)

Test mode: TX Mode

Freq. (MHz)	Ant.Pol.	Emission Level(dBuV/m)		Limit 3m(dBuV/m)		Over(dB)	
	H/V	PK	AV	PK	AV	PK	AV
--	--	--	--	--	--	--	--

Note: the amplitude of spurious emission that is attenuated by more than 20dB below the permissible limit has no need to be reported.
Distance extrapolation factor =40log(Specific distance/ test distance)(dB);
Limit line=Specific limits(dBuV) + distance extrapolation factor

Note: (1) All Readings are Peak Value.
(2) Correct Factor= Antenna Factor +Cable Loss- Amplifier Gain
(3) Emission Level= Reading Level+Probe Factor +Cable Loss
(4) True Value = Emission Level + Duty Cycle Correction Factor
(5) DF= Duty Cycle Correction Factor
(6) Duty Cycle Correction Factor (dB) = 20 × Log 10 Duty Cycle
(7) Margin = TrueValue – limit(if margin is minus means under limit)
(8) The "*" means restricted bands
(9) All the x/y/z orientation has been investigated, and only worst case is presented in this report.

■ Radiated spurious emission below 1GHz

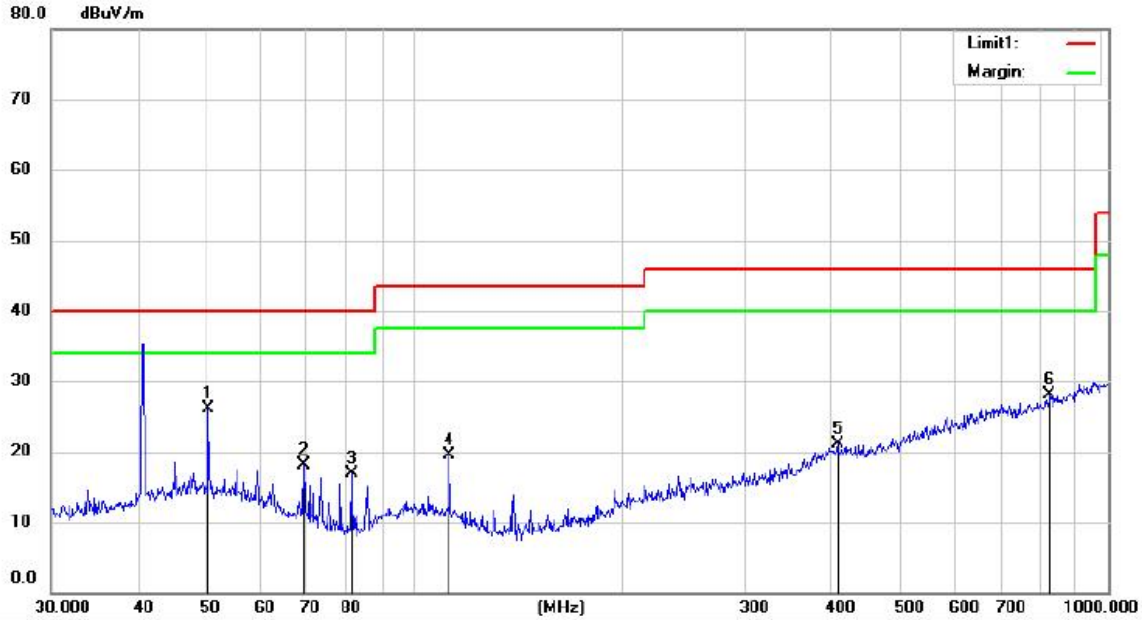

Site Chamber #1 Polarization: *Horizontal* Temperature: 23 C

Mode: TX 40.68Mhz

Note:

No.	Mk.	Freq.	Reading Level	Ant. Factor	Pre Amp Gain	Cable loss	Measure-ment	Limit	Over		HI	Degree	
		MHz	dBuV	dB/m	dB	dB	dBuV/m	dBuV/m	dB	Detector	cm	deg.	Comment
1	*	50.5860	41.93	13.94	30.48	0.8	26.19	40.00	-13.81	QP			
2		69.3568	37.45	10.03	30.55	1.11	18.04	40.00	-21.96	QP			
3		81.2117	38.45	8.07	30.61	1.05	16.96	40.00	-23.04	QP			
4		112.5244	38.04	11.05	30.82	1.17	19.44	43.50	-24.06	QP			
5		407.5145	30.90	16.39	29.82	3.55	21.02	46.00	-24.98	QP			
6		824.5968	32.38	22	30.14	3.85	28.09	46.00	-17.91	QP			

*:Maximum data x:Over limit !:over margin Operator: Ccyf

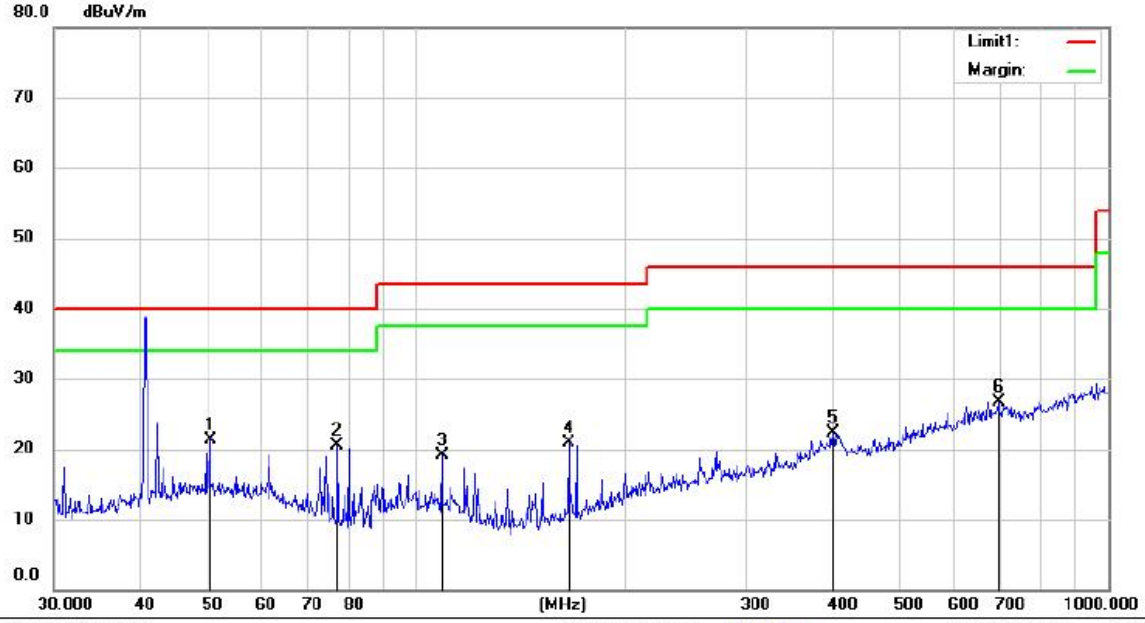

Site Chamber #1 Polarization: *Vertical* Temperature: 23 C

Mode: TX 40.68Mhz

Note:

No.	Mk.	Freq.	Reading Level	Ant. Factor	Pre Amp Gain	Cable loss	Measure-ment	Limit	Over		HI	Degree	
		MHz	dBuV	dB/m	dB	dB	dBuV/m	dBuV/m	dB	Detector	cm	deg.	Comment
1	*	50.4090	36.96	13.96	30.48	0.79	21.23	40.00	-18.77	QP			
2		77.0505	41.85	8.25	30.58	1.07	20.59	40.00	-19.41	QP			
3		109.0286	37.31	11.5	30.84	1.15	19.12	43.50	-24.38	QP			
4		166.0680	40.69	9.26	30.54	1.52	20.93	43.50	-22.57	QP			
5		400.4320	32.06	16.31	29.82	3.69	22.24	46.00	-23.76	QP			
6		694.4174	31.61	21.7	30.1	3.49	26.70	46.00	-19.30	QP			

*:Maximum data x:Over limit !:over margin Operator: Ccyf

Field Strength of the fundamental signal

FCC Part 15.229(a) field strength and Part 15.229(c)		
Fundamental Frequency	Field Strength Of Fundamental	Field Strength of Spurious Emissions
40.68MHz	1000 uV/m at 3m distance	100 uV/m at 3m distance
	60 dBuV/m at 3m distance	40 dBuV/m at 3m distance

Fundamental Frequency			Field Strength Of Fundamental	
Freq.	Ant. Pol.	Emission Level(dBuV/m)	Limit 3m(dBuV/m)	Margin(dB)
(MHz)	H/V	PK	PK	PK
40.686	H	35.43	60	-24.57
40.684	V	39.55	60	-20.45

Fundamental signal-H

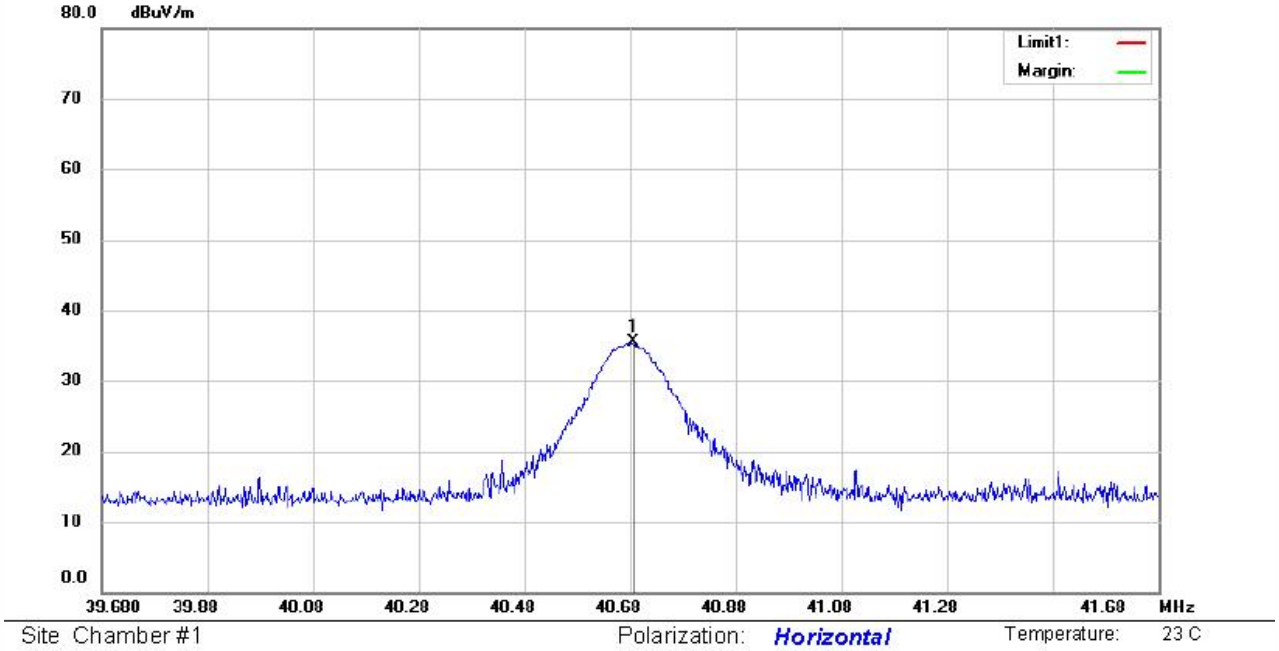

Fundamental signal-V

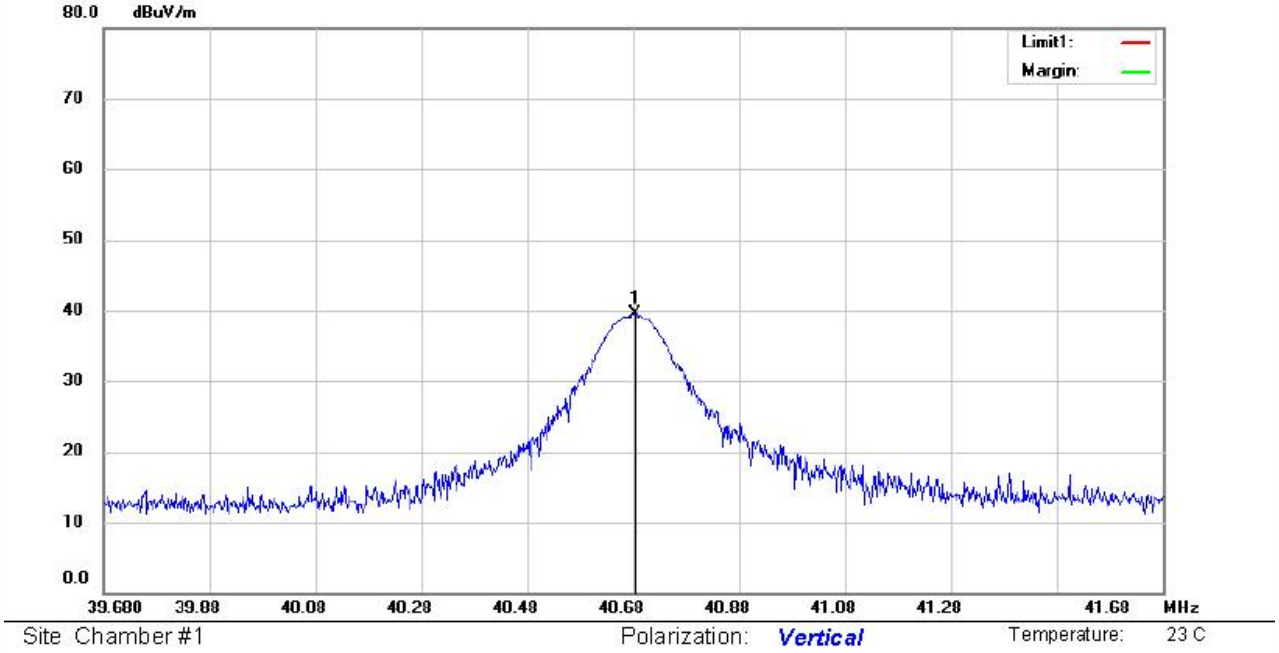

8.3 FREQUENCY STABILITY

8.3.1 Applicable Standard

FCC Part 15.229(d)

8.3.2 Conformance Limit

Carrier frequency stability shall be maintained to ±0.01% (±100 ppm)

8.3.3 Test Configuration

Test according to clause 7.1 radio frequency test setup

8.3.4 Test Procedures

Connect the EUT to frequency analyzer via the antenna connector.
EUT was placed at temperature chamber and connected to an external power supply.
Temperature and voltage condition shall be tested to confirm frequency stability.
(a) Frequency measurements shall be made at the extremes of the specified temperature range and at intervals of not more than 10° centigrade through the range. A period of time sufficient to stabilize all of the components of the oscillator circuit at each temperature level shall be allowed prior to frequency measurement. The short-term transient effects on the frequency of the transmitter due to keying (except for broadcast transmitters) and any heating element cycling normally occurring at each ambient temperature level also shall be shown. Only the portion or portions of the transmitter containing the frequency determining and stabilizing circuitry need be subjected to the temperature variation test.
(b) The frequency stability shall be measured with variation of primary supply voltage as follows:
(1) Vary primary supply voltage from 85 to 115 percent of the nominal value for other than hand carried battery equipment.
(2) For hand carried, battery powered equipment, reduce primary supply voltage to the battery operating end point, which shall be specified by the manufacturer.

8.3.5 Test Results

Operation Mode	Channel Number	Test Condition		Channel Frequency (MHz)	Freq.Dev. (Hz)	Deviation (ppm)	Limit (ppm)
		Voltage (V)	Temp (℃)				
ASK	CH1	Vnom	-20	40.86	-44	-1.08	100
			-20	40.86	-11	-0.27	100
			-10	40.86	-10	-0.24	100
			0	40.86	-29	-0.71	100
			10	40.86	-25	-0.61	100
			20	40.86	-18	-0.44	100
			30	40.86	-23	-0.56	100
			40	40.86	-21	-0.51	100
			50	40.86	-16	-0.39	100
		85% Vnom	20	40.86	-15	-0.37	100
		115% Vnom	20	40.86			
VERDICT				PASS			

8.4 CONDUCTED EMISSION TEST

8.4.1 Applicable Standard

FCC Part 15.207

8.4.2 Conformance Limit

Conducted Emission Limit		
Frequency(MHz)	Quasi-peak	Average
0.15-0.5	66-56	56-46
0.5-5.0	56	46
5.0-30.0	60	50
Note: 1. The lower limit shall apply at the transition frequencies 2. The limit decreases in line with the logarithm of the frequency in the range of 0.15 to 0.50MHz.		

8.4.3 Test Configuration

Test according to clause 7.3 conducted emission test setup

8.4.4 Test Procedure

The EUT was placed on a table which is 0.8m above ground plane.
Maximum procedure was performed on the highest emissions to ensure EUT compliance.
Repeat above procedures until all frequency measured were complete.

8.4.5 Test Results

Not Applicable.

8.5 ANTENNA APPLICATION

8.5.1 Antenna Requirement

Standard	Requirement
RSS-Gen.6.8	An intentional radiator shall be designed to ensure that no antenna other than that furnished by the responsible party shall be used with the device. The use of a permanently attached antenna or of an antenna that uses a unique coupling to the intentional radiator shall be considered sufficient to comply with the provisions of this section. The manufacturer may design the unit so that a broken antenna can be replaced by the user, but the use of a standard antenna jack or electrical connector is prohibited. This requirement does not apply to carrier current devices or to devices operated under the provisions of RSS-Gen.6.8. Further, this requirement does not apply to intentional radiators that must be professionally installed, such as perimeter protection systems and some field disturbance sensors, or to other intentional radiators which, in accordance with RSS-Gen.6.8, must be measured at the installation site. However, the installer shall be responsible for ensuring that the proper antenna is employed so that the limits in this part are not exceeded.

8.5.2 Result

PASS.

Note:
- ☑ Antenna use a permanently attached antenna which is not replaceable.
- ☐ Not using a standard antenna jack or electrical connector for antenna replacement
- ☐ The antenna has to be professionally installed (please provide method of installation)

Please refer to the attached document Internal Photos to show the antenna connector.