# CLRD730

## Pegoda Smart Card Reader based on PN7642

**Rev. 3.1 — 31 August 2023** **Product data sheet**

## 1 General description

The Pegoda CLRD730 desktop reader is a reference design and evaluation reader for contactless applications based on MIFARE, NTAG, and ICODE products as well as NFC-enabled mobile phones. The reader is built based on a controller-based NFC reader IC, named PN7642 with a powerful Cortex M33 microcontroller. The controller-based NFC reader IC hosts a Chip Card Interface Device (CCID) for operation.

The CLRD730 supports two communication modes. By default the reader is delivered in PC/SC mode (personal computer/smart card) and can be switched by use of the Mode button to VCOM (Virtual COM) on »USB-C 1« port. The additional offered »USB-C 2« Power Port can be used for an additional external power supply.

Next to the controller-based NFC reader IC the Common Criteria EAL 6+ certified MIFARE SAM AV3 is supported. By default, the MIFARE SAM AV3 is included with an add-on board module in non-X mode supporting multiple secure symmetrical (TDES, AES) and asymmetrical protocols (RSA, ECC), as well as offering secure key storage of required close-loop infrastructures. In addition, a MIFARE SAM AV3 contact ID-1 card through TDA8035 can be used through the offered contact interface of the CLRD730 reader.

The Pegoda CLRD730 reader offers a contact $I^2C$ controller serial port as host serial communication interface. The $I^2C$ interface is accessible from the outside between the »USB-C 1« and »USB-C 2« ports by a 4-pin $I^2C$ connector.

The Pegoda CLRD730 reader offers full support of RFIDDiscover and CardTestFramework for all MIFARE, NTAG, and ICODE products. It uses an open software concept and PC-based tools with drivers for Windows, MacOS, and Linux support. The software code and hardware architecture are reusable.

The Pegoda CLRD730 desktop reader is designed to work with standard PC/SC and VCOM drivers on Windows 10/11, MacOS, and Linux. When the reader is in PC/SC mode, querying the PC/SC readers on Windows produce:

```
NXP Semiconductors NXP Pegoda 3 (CL) 0
NXP Semiconductors NXP Pegoda 3 (CT) 0
```

The Pegoda CLRD730 desktop reader is designed to work with any standard PC/SC tool.

**Note:** It is recommended to change communication mode of the reader from PC/SC to VCOM by use of RFIDDiscover and CardTestFramework. The supported VCOM mode on Pegoda CLRD730 reader implements the direct mode commands from the predecessor Pegoda MFEV710. Take care that the required VCOM driver of the SW tool in use is installed accordingly.

The Pegoda 3 - CLRD730 device is Certified Compliant with NFC Forum specifications (Certification ID 60154), see https://nfc-forum.org/products/certified-products.

## 2 Features and benefits

### Features

- PN7642: All-in-one full ISO/IEC 14443, ISO/IEC 15693, and NFC (ISO/IEC 18000-2) controller solution with support of high data rates
- MIFARE SAM AV3: latest security features support of MIFARE, NTAG, and ICODE
- USB-C 1: Dataport for power supply and communications via PC/SC or VCOM mode for Windows, MacOS, and Linux.
- Fully compatible with NXP tools like RFIDDiscover, Card Test Framework, and NFC Cockpit
- Pegoda CLRD730 firmware binary, Ready to Flash in the Mass Storage Mode

### Benefits

- PN7642 and MIFARE SAM AV3 based reference design and evaluation reader for fast, flexible development of secure reader systems
- Quick embedded development with portable code for contactless connectivity and security experience through MIFARE, NTAG, and ICODE
- Contact experience by support of $I^2C$ controller for connected tags
- Easy customization with flash-based microcontroller on NFC controller

### Certifications

- CE (LVD, RED), FCC (Part 15), and EMC declaration of conformity
- NFC Form certification
- NFC reader for MIFARE certification

### Kit content

- Pegoda smart card reader, CLRD730
- USB-C cable for power supply and communications
- MIFARE product-based cards and NFC tags of NTAG and ICODE


All information provided in this document is subject to legal disclaimers.

© 2023 NXP B.V. All rights reserved.

## 3 Applications

- Public transport ticketing (Metro, Bus, Train, …)
- Access management (Cooperate, Hospitality, Residential, …)
- Event management (Concerts, Sports, Culture, …)
- Micro-payment / Loyalty
- EV-charging
- NFC tagging
- PC peripheral terminal
- And many others


All information provided in this document is subject to legal disclaimers.

© 2023 NXP B.V. All rights reserved.

# 4 Ordering information

**Table 1. Ordering information**

| Type number | Package | | |
|---|---|---|---|
| | Name | Description | Version |
| **CLRD730** | Pegoda smart card reader | • CLRD730, Pegoda desktop smart card reader | - |
| **MFEV730** | Pegoda smart card reader kit | • CLRD730, Pegoda desktop smart card reader<br>• MIFARE cards and NFC tags of NTAG, and ICODE<br>• USB-C cable for power supply and communications | - |


All information provided in this document is subject to legal disclaimers.

© 2023 NXP B.V. All rights reserved.

# 5 Block diagram

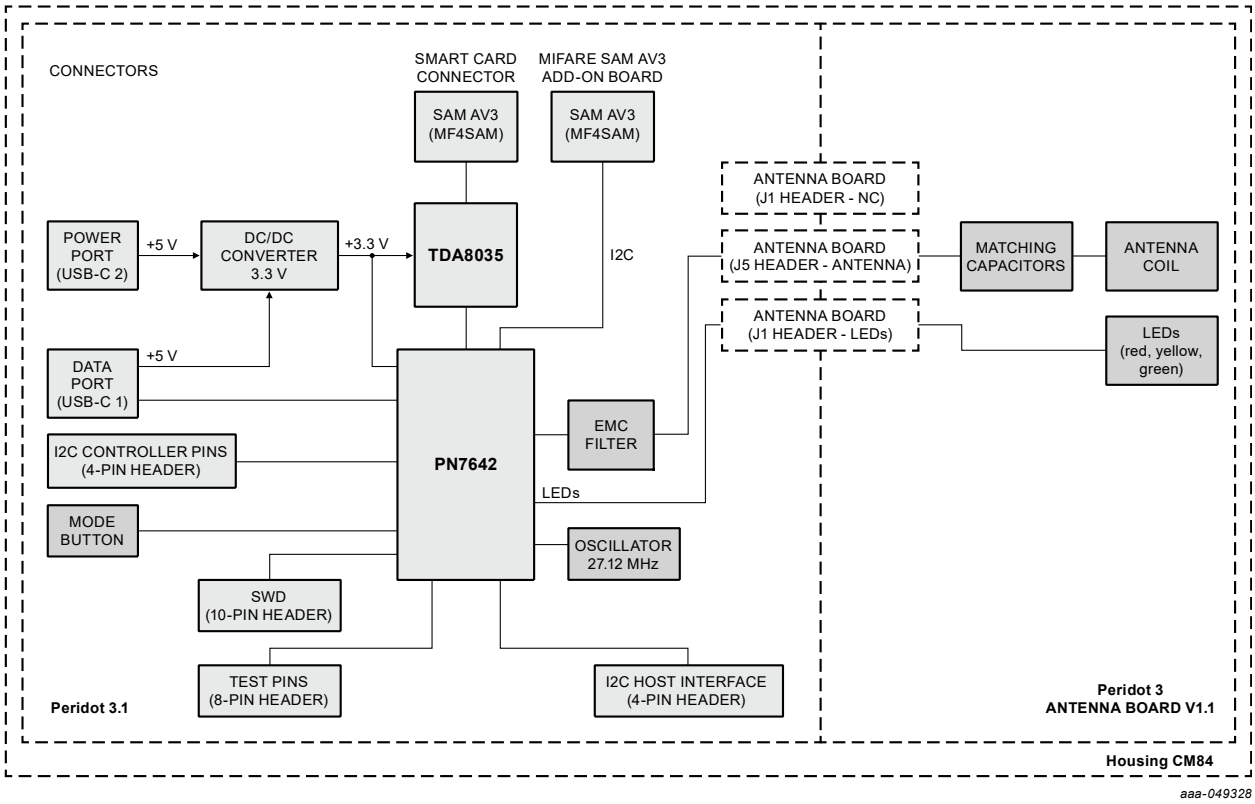


**Figure 1. Block diagram**


All information provided in this document is subject to legal disclaimers.

© 2023 NXP B.V. All rights reserved.

# 6 Functional description

The Pegoda CLRD730 desktop reader is a contactless and contact smart card reader/writer according to the block diagram as shown in Figure 1.

The contactless interface supports:

- ISO/IEC 14443 1-4 standard with data rates of 106 kbit/s, 212 kbit/s, 424 kbit/s, and 848 kbit/s (MIFARE, NTAG 2x, and NTAG 4x)
- ISO/IEC 15693 and ISO/IEC 18000-3-M1&M3 standard with data rates up to 212 kbit/s (ICODE, NTAG 5)
- ISO 7816 contactless wrapped support to allow mobile integration (MIFARE 2GO).

The contact interface by $I^2C$ controller serial port is offered as host serial communication interface.

The controller-based PN7642 NFC reader IC directly interfaces with its integrated peripherals to the Host (PC) via »USB-C 1« 2.0 serial port (dataport). Second, optional »USB-C 2« port (Power Port) is offered to additionally power the reader (from Personal Computer or from USB power adapter with max up-to 5V/1A).

**Note:** To make use of the additional interfaces on the main board and/or additional power supply by »USB-C 2« port, be aware, that jumpers and onboard resistors must be placed to proper positions.

In addition, the MIFARE SAM AV3 in HVQFN32 package is designed in with an add-on board in non-X mode. The communication of the MIFARE SAM AV3 to the controller-based NFC reader is supported by $I^2C$. Furthermore, a MIFARE SAM AV3 in ID-1 form factor (PLLMC8) can be inserted from the outside by use of the contact card slot.

For developing purposes, additional communication interfaces are accessible on the main board of the Pegoda CLRD730 reader. To access those additional interfaces on the PCB main board, the housing must be opened to access: SWD serial interface, $I^2C$ host interface, and additional test pins (IRQ, Select, Aux).

Pegoda CLRD730 desktop reader is delivered with default configuration with »USB-C 1« 2.0 serial port (dataport) enabled as PC/SC reader. For standard use »USB-C 1« must be connected for power supply and communications through the dataport.

To change the communication mode from PC/SC (standard) to VCOM, the mode button must be pushed. The Mode button is accessible from the outside at the side of the reader by a small hole to avoid an unintentional change of the communication modes.


All information provided in this document is subject to legal disclaimers.

© 2023 NXP B.V. All rights reserved.

**Figure 2. Angle**

**Figure 3. Back**

Pegoda CLRD730 desktop reader connected with »USB-C 1« to PC for communications and power supply

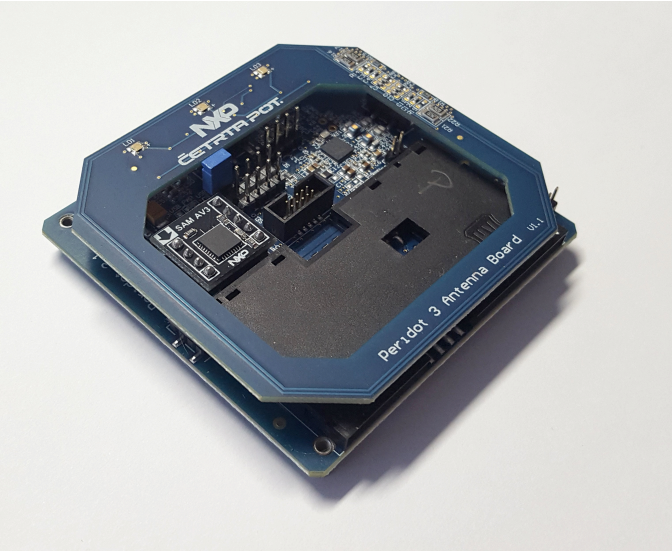


**Figure 4. Pegoda CLRD730 desktop reader without CM84 housing (main and antenna board)**


All information provided in this document is subject to legal disclaimers.

© 2023 NXP B.V. All rights reserved.

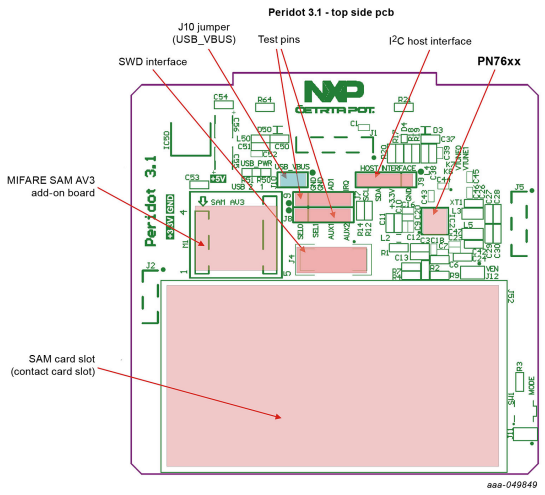


Figure 5. PCB main board - top side

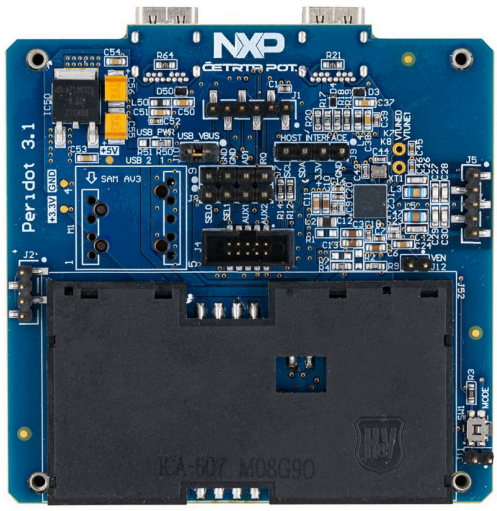

Figure 6. Photograph

PCB main board - top side

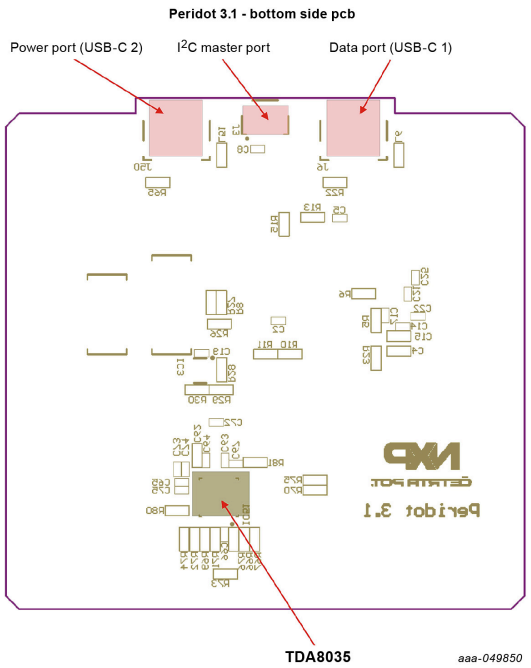


Figure 7. PCB main board - bottom side

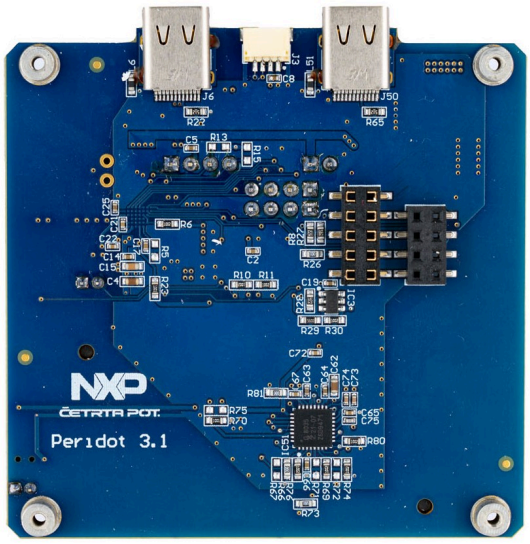

Figure 8. Photograph

PCB main board - bottom side

For contactless interface support, an antenna board with a dimension of 68 mm x 64 mm is built into the housing based on a 4-layer PCB. Passive electronic parts (resistors and capacitors) for antenna matching as well LEDs are mounted directly on the printed-circuit board to represent the

1. Communication Mode, PS/SC, or VCOM
2. Communication Status
3. Mass Storage Mode


All information provided in this document is subject to legal disclaimers.

© 2023 NXP B.V. All rights reserved.

The connection of the reader antenna board with the main board is done with 3 headers.

- Header J1 to connect the LEDs of the antenna PCB to the main board, Figure 11.
- Header J2 to stabilize the connection of the antenna board to the main board, Figure 12.
- Header J5 to connect the matching circuit of the antenna to the main board, Figure 13.

Both PCB boards (main and antenna) are build into a CM84 housing. Labels for the »USB-C 1« (dataport), »USB-C 2« port (Power Port) as well the $I^2C$ host interface are added on the housing at the side.

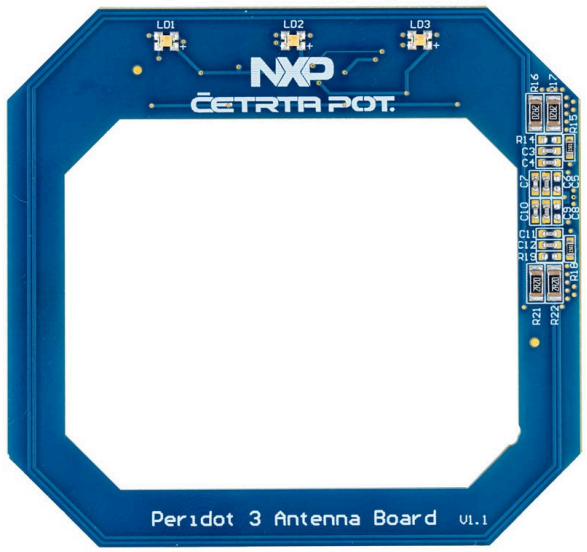


**Figure 9. Antenna top**

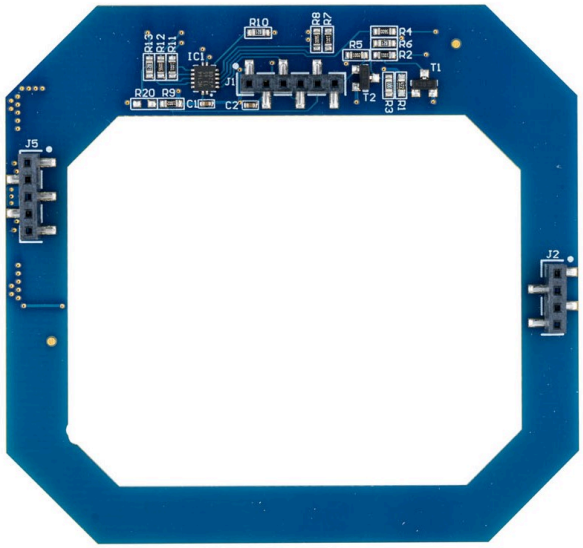


**Figure 10. Antenna bottom**

Pegoda CLRD730 (antenna board with 3x RGB lights)

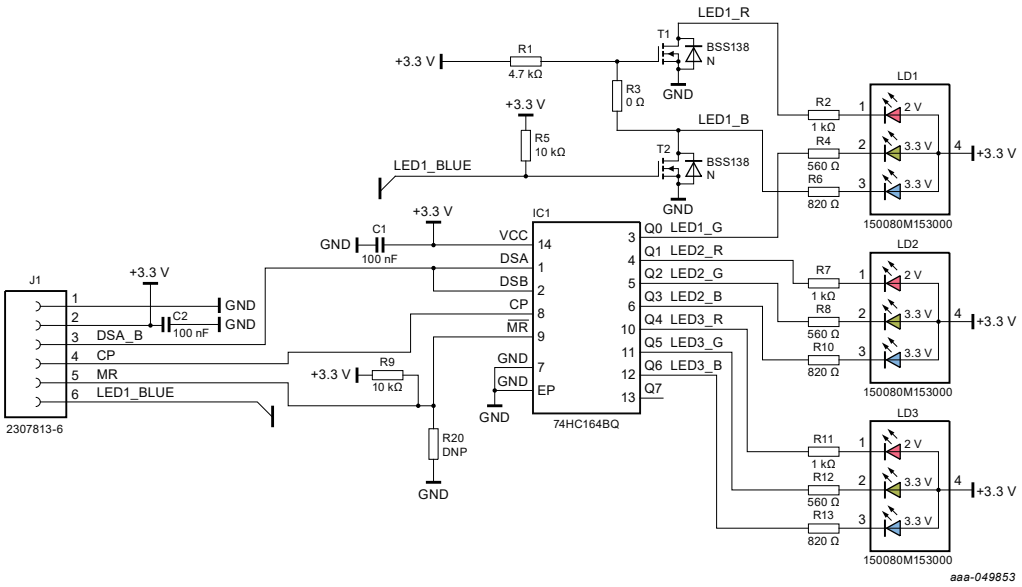


**Figure 11. Header J1 for connecting LEDs to main board Peridot 3.1**


All information provided in this document is subject to legal disclaimers.

© 2023 NXP B.V. All rights reserved.

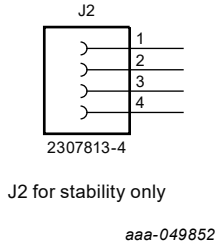


**Figure 12. Header J2 on antenna board is only for stability – to stabilize antenna board connected to Peridot 3.1 board**

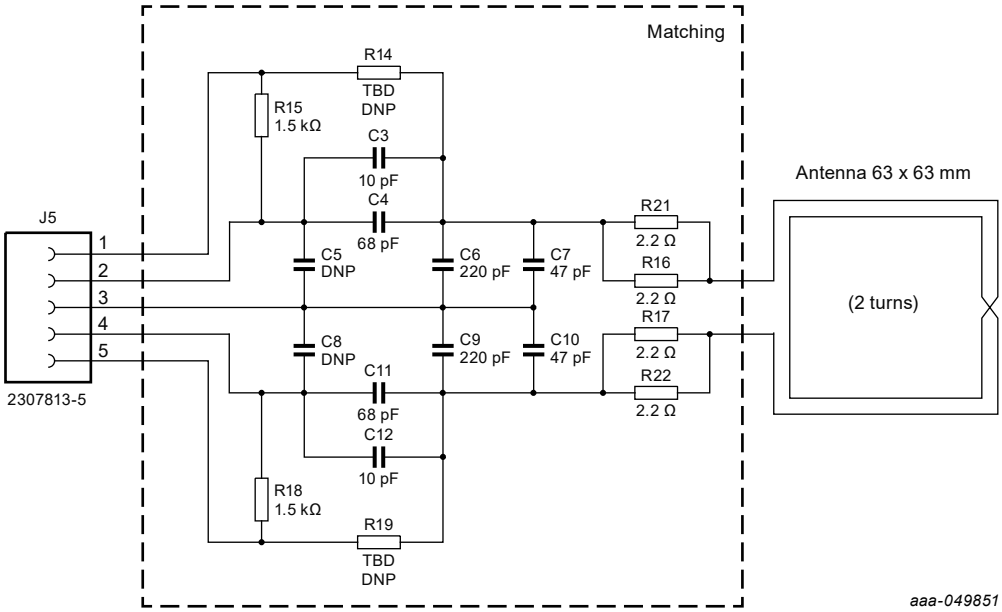


**Figure 13. Header J5 for connecting antenna coil and matching capacitors to main board Peridot 3.1**

The Pegoda CLRD730 comes as a Chip Card Interface Device together with a CCID example. The CCID example is hosted on the PN7642 NFC controller to test any PC/SC application running on the Personal Computer with Windows. The CCID example provides the CCID protocol example. The CCID is hosted on the PN7642 NFC controller to test any PC/SC application running on the Personal Computer with Windows. The CCID reader example provides the CCID protocol example. The CCID is hosted on the PN7642 NFC controller to test any PC/SC application running on the Personal Computer with Windows. The CCID reader example provides the CCID protocol implementation on top of the physical link.

This section provides a description of the USB interface implementation of the CCID protocol and of the PC/SC interface.


All information provided in this document is subject to legal disclaimers.

© 2023 NXP B.V. All rights reserved.

## 6.1 USB stack and CCID class implementation

The USB stack and CCID class are implemented in the NFC controller-based PN7642 reader IC. For operation, the default Windows CCID driver is in use.

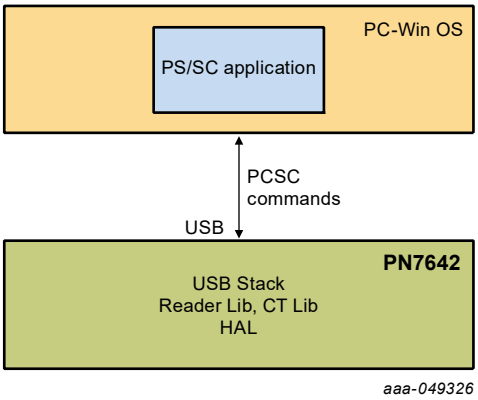


**Figure 14. Block diagram**

The Pegoda CLRD730 reader supports two communication modes on dataport marked as »USB-C 1« for communication with the application software running on the PC. By default, PC/SC mode is enabled. By use of the Mode button the communication mode can be switched to VCOM (Virtual COM) on »USB-C 1« port and vice versa.


All information provided in this document is subject to legal disclaimers.

© 2023 NXP B.V. All rights reserved.

## 6.2 Application architecture

The CCID example demonstrates how to implement Chip Card Interface Device functionality on to the NFC controller-based PN7642 reader IC using the contactless and contact interface.

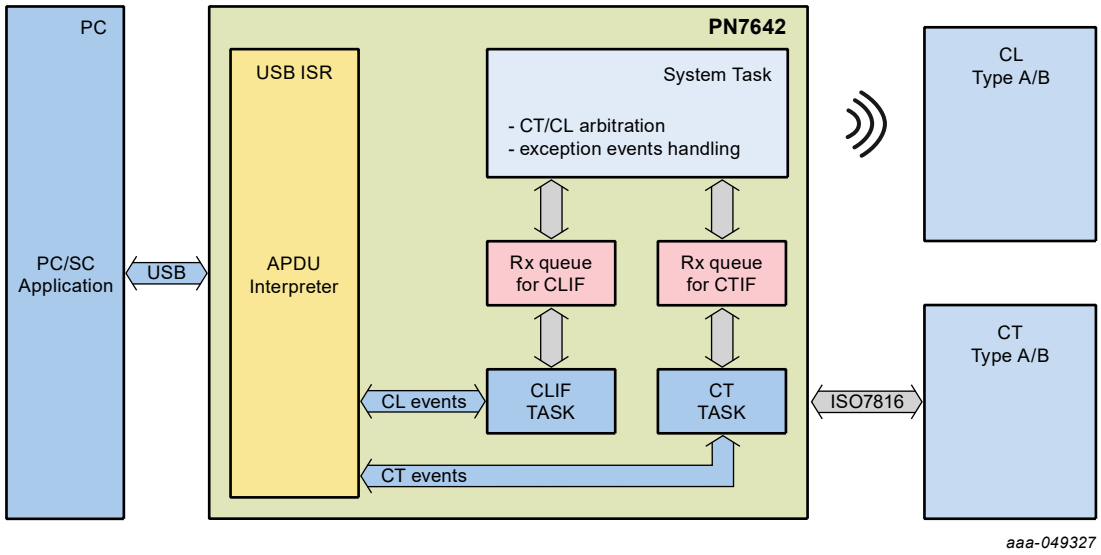


**Figure 15. Application architecture of the "CCID" example**

The Pegoda CLRD730 desktop reader based on the NFC controller-based PN7642 reader IC in application has the following modules:

- USB ISR – send and receive the CCID class commands through the bulk out, bulk in and interrupt endpoints.
- System task − Responsible for any exceptions
  - Notification from CT/CL/Timer/PMU ISRs.
  - Responsible for initiating CT/CL task messages.
- CL task − Wait for messages from system task to start CL task for polling.
  - After polling wait for events from USB ISR for CCID commands.
- CT task − Wait for messages from system task to start CT task for card activation.
  - Wait for events from USB ISR for CCID commands after activation.


All information provided in this document is subject to legal disclaimers.

© 2023 NXP B.V. All rights reserved.

## 6.3 Jumpers setting and resistor mounting

The Pegoda CLRD730 desktop reader offers options of use.

**Note:** Standard configuration of the Pegoda CLRD730 desktop reader is with J10 inserted and R50 mounted to use »USB-C 1« as dataport and Power supply.

In case of the requirement of increased contactless output power »USB-C 2« (Power Port-B) can be enabled to use up-to max. 5 V / 1A. To enable »USB-C 2« (Power Port-B) in addition to »USB-C 1«, resistor R51 must be inserted with a 0 Ω value.

**Table 2. Jumper settings – ENABLE USB-C 1 as dataport**

| Jumper | Signal/Pin | Position | Description |
|---|---|---|---|
| J10 | USB_VBUS | Inserted (default) | USB-C 1 port (Data Port-A) is ENABLED and serial communication via USB-C 1 port is possible. |
| J10 | USB_VBUS | Not inserted | USB-C 1 port (Data Port-A) is DISABLED and serial communication via USB-C 1 port is not possible. |

**Table 3. Resistor settings – ENABLE USB-C 2 as additional Power Supply**

| Resistor | Signal/Pin | Position | Description |
|---|---|---|---|
| R51 | USB_VIN | Not mounted (default) | USB-C 2 port (Power Port-B) is DISABLED |
| R51 | USB_VIN | Mounted (0 Ω) | USB-C 2 port (Power Port-B) is ENABLED. up-to max. 5 V / 1 A. |


All information provided in this document is subject to legal disclaimers.

© 2023 NXP B.V. All rights reserved.

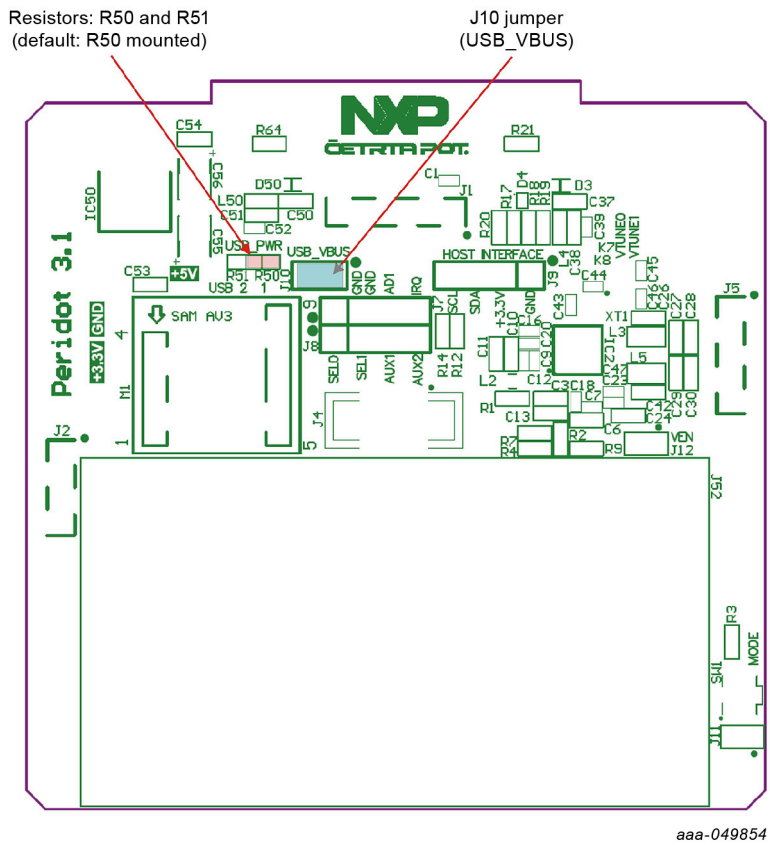


**Figure 16. Contactless reader CLRD730 (PCB Peridot 3.1) – resistor R50 and jumper J10**

To enable »USB-C 2« port as an additional external power supply, resistor R51 must be mounted with 0 Ohm. With both »USB-C 1« and »USB-C 2« ports enabled, a max. power of up-to 5 V with 1 A is supported by the Pegoda CLRD730 desktop reader.

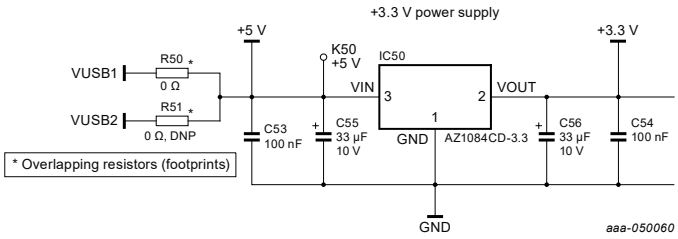


**Figure 17. Pegoda CLRD730 desktop reader**

**Note:** USB-C 2.0 cable is USB-A to USB-C cable with a max. length up-to 1.8 m. The external power supply has to comply with LPS requirement of IEC 62368-1.


All information provided in this document is subject to legal disclaimers.

© 2023 NXP B.V. All rights reserved.

## 6.4 PN7642 NFC open controller settings

The controller-based PN7642 reader IC is based on a Cortex M33 microcontroller with integrated NFC interface and security subsystem by use of a clock frequency of 27.12 MHz with a voltage supply of 3.3 V for standard operation (see Figure 18).

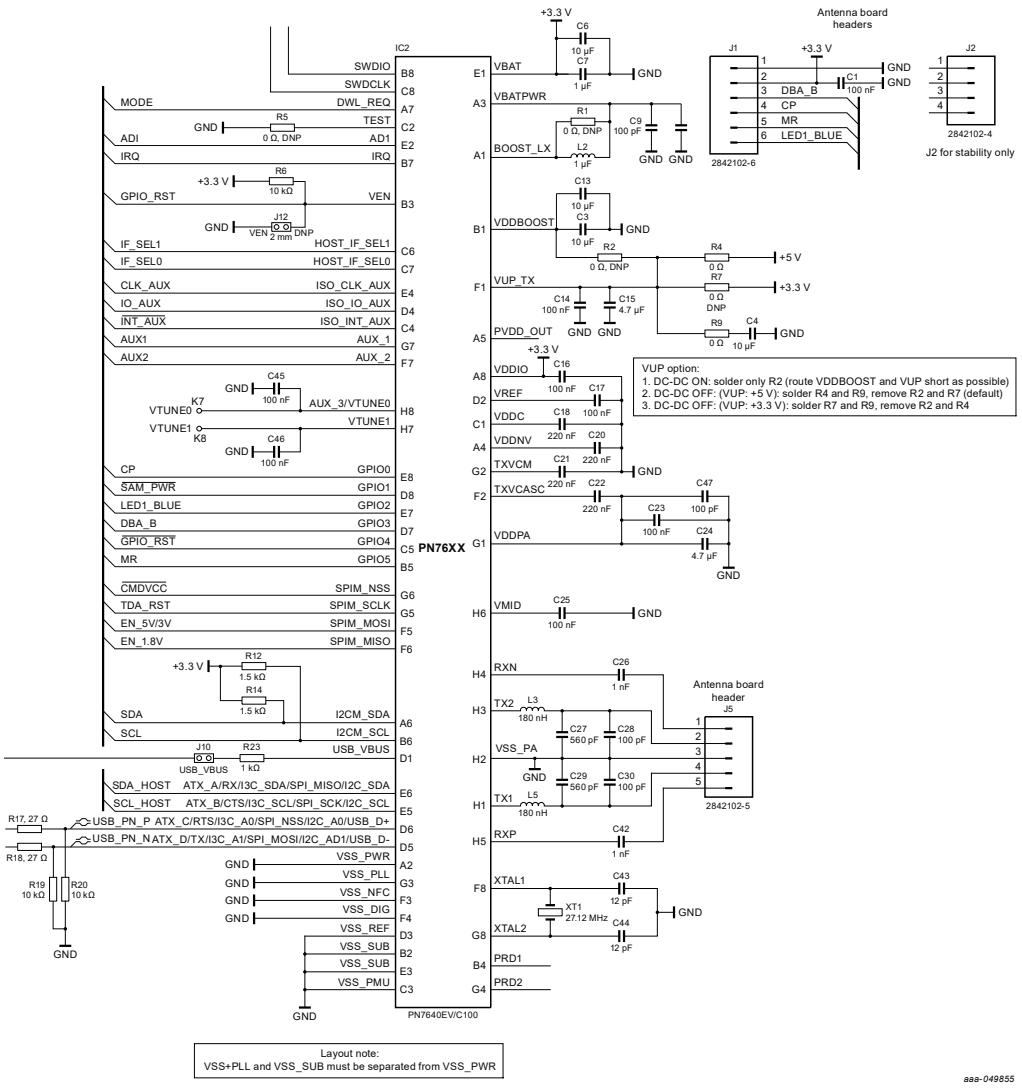


**Figure 18. The PN7642 NFC open controller with antenna connectors (from reader schematics)**

Voltage to supply pin VUP_TX is defined with resistors R2, R4, R7, and R9.


All information provided in this document is subject to legal disclaimers.

© 2023 NXP B.V. All rights reserved.

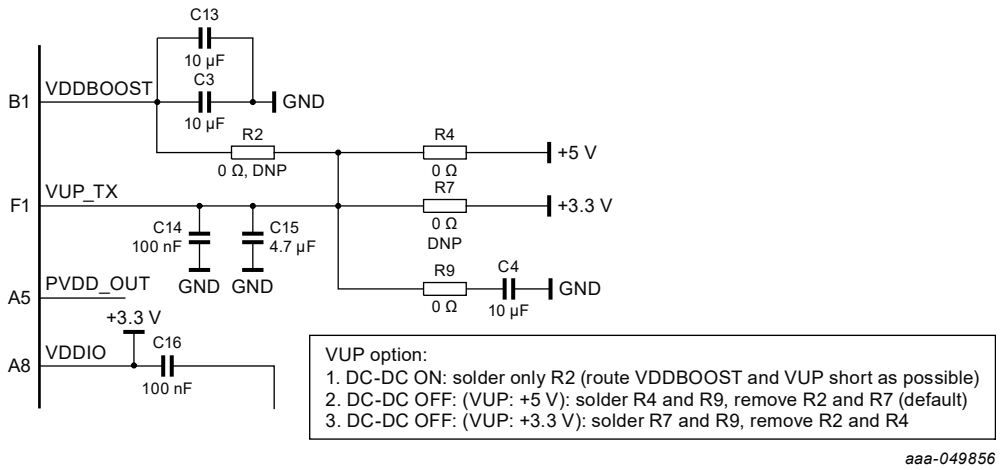


**Figure 19. Resistor settings for PN7642 configuration – VUP option**


All information provided in this document is subject to legal disclaimers.

© 2023 NXP B.V. All rights reserved.

## 6.5 I²C interfaces

The I²C controller of the PN7642 is used for internal communication with the MIFARE SAM AV3 add-on board as well as accessible from the outside by use of USB VCOM mode with I²C commands toward external I²C devices.

- Pegoda reader internal use by connection to the MIFARE SAM AV3 add-on board.
  - Internal DIL socket connector 9 pin (4+5) used exclusively for inserting MIFARE SAM AV3 add-on board (supplied in default reader configuration).
- Pegoda reader external by use of the 4-pin I²C connector from the outside between the two USB-C connectors
  - 4-pin connector (JST SM04B-SRSS-TB) is intended for I²C serial communication with external devices.
  - I²C cable is not supplied with the Pegoda reader CLRD730 or the Pegoda smart card reader kit MFEV730. Cable can be used consisting of:
    - JST SHR-04V-S
    - JST SSH-003GA-P0.2
    - 4 wires 28WG, 1 mm pitch

**Table 4. Ordering information**

| Pin No. | Assign. | Description |
|---|---|---|
| **1** | GND | GND |
| **2** | +3.3 V | Power |
| **3** | Data line | Data line |
| **4** | Clock line | Clock line |

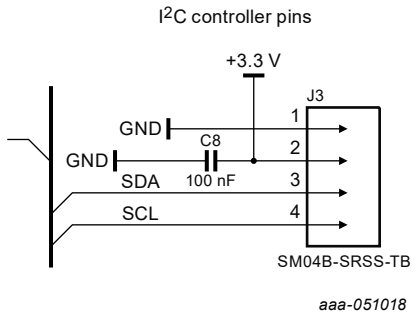


**Figure 20. I²C controller pins**

### 6.5.1 I²C host interface setting

The contact I²C controller serial port as host serial communication interface on the Pegoda CLRD730 is accessible between the two USB-C ports.


All information provided in this document is subject to legal disclaimers.

© 2023 NXP B.V. All rights reserved.

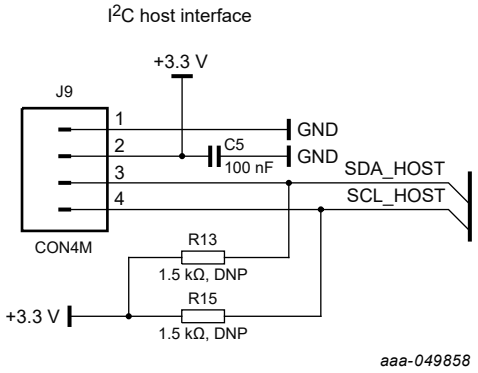


**Figure 21. I²C host interface (part of reader schematic)**

### Settings for I²C host interface:

- In case the external I²C target does not have pullup resistors on the I²C lines, resistors R13, and R15 can be inserted.

### Entering HIF:

- Disconnect USB_VBUS jumper (to deselect USB interface),
- Fit jumpers IF_SEL0 and IF_SEL1 – both to GND as presented on figure bellow,
- Connect SCL, SDA +3V3 and GND signals on Peridot 3.1 board with external controller processor pins, and power on the reader.

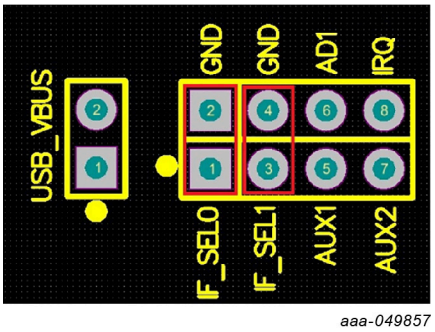


**Figure 22. Proper jumper settings for I²C host interface**

I²C address setting:

- The address is 0x28 because both resistor R19 and R20 are inserted (ATX_C and ATX_D lines are set to 0).

**Table 5. I²C address setting**

| I²C_ADR1 | I²C_ADR0 | I²C address (R/W = 0, write) | I²C address (R/W = 0, read) |
|---|---|---|---|
| 0 | 0 | 0x28 | 0x28 |
| 0 | 1 | 0x29 | 0x29 |
| 1 | 0 | 0x2A | 0x2A |
| 1 | 1 | 0x2B | 0x2B |


All information provided in this document is subject to legal disclaimers.

© 2023 NXP B.V. All rights reserved.

## 6.6 Signaling with LEDs

The Pegoda CLRD730 desktop reader offers the option to choose between PC/SC and VCOM communication mode. To represent the communication mode, communication status and Mass Storage Mode of the reader, LEDs are visual from the outside. Marked with POWER, MODE, and COMM.

**Figure 23. The top side of the reader CLRD730 with LEDs**

## 6.7 CLRD730 reader modes and examples

The Pegoda CLRD730 desktop reader works in two communication modes:

- **PC/SC** - *Personal Computer / Smart Card*
- **VCOM** - *Virtual COM*

The communication mode can be changed between the two modes by pressing the MODE button. The MODE button can be pressed by use of a thin needle through the hole at the side of the reader. The button must be pressed as long as blinking of the LEDs stops. After that, the reader shall be in the other communication mode. Recognizable by the changed color of the LED (middle) marked with MODE. If the color of the LED (middle) is YELLOW, the reader is in PC/SC mode. If the color of the LED (middle) is AZURE, the reader is in VCOM mode.

The figures below are presenting VCOM and PC/SC mode of the Pegoda CLRD730 desktop reader. LED (middle) Azure for VCOM and Yellow for PC/SC.


All information provided in this document is subject to legal disclaimers.

© 2023 NXP B.V. All rights reserved.

Figure 24. VCOM mode

Figure 25. PC/SC mode

The LEDs are further defined as:

- **POWER** referring to **LED (left)**
  - RED: Power ON. Connected by »USB-C 1« for power supply.
  - BLUE: Mass Storage Mode (**Note:** middle and right LED undefined in Mass Storage Mode)
- **MODE** referring to **LED (middle)**
  - YELLOW: CLRD730 in PC/SC mode
  - AZURE: CLRD730 in VCOM mode
- **COMM.** referring to **LED (right)**: (stands for COMMunication)
  **PC/SC:**
  - RED – no card in field
  - GREEN – card in field
  - BLUE – card communication
  - YELLOW – presence check / discovery loop

  **VCOM:**
  - GREEN – card communication
  - RED – no card / no communication

The Pegoda CLRD730 desktop reader is designed to work with standard PC/SC and VCOM drivers on Windows 10/11, MacOs, and Linux.

When reader is in PC/SC mode, querying the PC/SC readers on Windows produce:

```
NXP Semiconductors NXP Pegoda 3 (CL) 0
NXP Semiconductors NXP Pegoda 3 (CT) 0
```

One can use any standard PC/SC tool to connect to the Pegoda CLRD730 desktop reader and use it.


All information provided in this document is subject to legal disclaimers.

© 2023 NXP B.V. All rights reserved.

## 6.8 PC/SC mode

Supported PC/SC communication mode on Pegoda CLRD730 reader is a standard contactless communication for ISO/IEC14443-L3&L4 and ISO/IEC 15693 products. GET DATA (Part 3. PC/SC chapter 3.2.2.1.3) can be used to retrieve the UID and historical bytes of ATS (where applicable).

Communication with ISO14443-L4 products is natively supported. For ISO14443-L3 one can use standard PC/SC commands for memory cards or proprietary transparent commands. For ISO15693 products one can use proprietary transparent commands.

The reader implements the commands defined in Part 3. of the PC/SC specification as:

- *3.2.2.1.3 GET DATA*
- *3.2.2.1.4 LOAD KEYS*
- *3.2.2.1.5 AUTHENTICATE*
- *3.2.2.1.8 READ BINARY*
- *3.2.2.1.9 UPDATE BINARY*

GET DATA can be used on any card type, while others are only supported on MIFARE Classic EV1 and MIFARE Ultralight product-based cards. Refer to the PC/SC specification for more information.

**Example of *GET VERSION* on *MIFARE DESFire* card (with *ISO14443-L4* wrapping):**

Command: *90 60 00 00 00*

Response: *04 01 01 33 00 1A 05 91 AF*

Command: *90 AF 00 00 00*

Response: *04 01 01 03 FE 1A 05 91 AF*

Command: *90 AF 00 00 00*

Response: *04 B3 4F D2 DB 6B 80 99 48 95 00 00 11 20 91 00*

**Example of working with MIFARE Classic EV1 card:**

**LOAD KEY:**

Command: *FF 82 00 00 06 FF FF FF FF FF FF*

Response: *90 00*

**AUTHENTICATE**

Command: *FF 86 00 00 05 01 00 00 60 00*

Response: *90 00*

**READ BINARY**

Command: *FF B0 00 02 10*

Response: *00 01 02 03 04 05 06 07 08 09 0A 0B 0C 0D 0E 0F 90 00*

**UPDATE BINARY**

Command: *FF D6 00 02 10 00 01 02 03 04 05 06 07 08 09 0A 0B 0C 0D 0E 0F*

Response: *90 00*

**READ BINARY**

Command: *FF B0 00 02 10*

Response: *00 01 02 03 04 05 06 07 08 09 0A 0B 0C 0D 0E 0F 90 00*


All information provided in this document is subject to legal disclaimers.

© 2023 NXP B.V. All rights reserved.

**UPDATE BINARY**

Command: *FF D6 00 02 10 0F 0E 0D 0C 0B 0A 09 08 07 06 05 04 03 02 01 00*

Response: *90 00*

**READ BINARY**

Command: *FF B0 00 02 10*

Response: *0F 0E 0D 0C 0B 0A 09 08 07 06 05 04 03 02 01 00 90 00*

## 6.9 Proprietary transparent commands

***Firmware version***

**Command:**

| Class | Instruction | P1 | P2 | Description |
|---|---|---|---|---|
| FF | E1 | 00 | 00 | Get firmware version |

**Response:**

String with name and version + 9000

**Example:**

Command: *FF E1 00 00*

Response: *4E 58 50 20 50 65 67 6F 64 61 20 33 20 36 2E 30 2E 30 90 00*

Response (ASCII): *NXP Pegoda 3 6.0.0 SW=9000 (Success)*

***RF Field control***

One can control the RF field of the reader be issuing proprietary command FF FD as:

| Class | Instruction | P1 | P2 | Description |
|---|---|---|---|---|
| FF | FD | 00 | 00 | RF Field Off |
| FF | FD | 01 | 00 | RF Field On |
| FF | FD | 02 | 00 | RF Field Reset |

**Response:**

9000 on success or error code on error.

**Example:**

Command: *FF FD 02 00*

Response: *90 00*

***ISO14443-L4 Activation Parameters***

| Class | Instruction | P1 | P2 | Lc | | Description |
|---|---|---|---|---|---|---|
| FF | FC | 04 | 00 | | | RF Field Off |
| FF | FC | 04 | 01 | 05 | <config data> | RF Field On |


All information provided in this document is subject to legal disclaimers.

© 2023 NXP B.V. All rights reserved.

**Response:**

- when P2 = 0 – 5 byte parameters + 9000 where we get:
  - FSDI
  - NAD
  - CID
  - DRI
  - DSI
- when P2 = 1 – 9000 on success

**Example:**

Command: *FF FC 04 00*

Response: *08 00 00 03 03 90 00*

Command: *FF FC 04 01 05 08 00 00 01 01*

Response: *90 00*

***Note:*** *The settings will be applied to the activation after RF Filed Reset command or by removing the card from the field and reactivating it.*

***Exchange data***

| Class | Instruction | P1 | P2 | Lc | ... |
|---|---|---|---|---|---|
| FF | FE | 00 | 00 | <LEN> | DATA |

**Response**

- <data> 9000 on success (data is set if applicable)
- 91 XX where XX is NACKX – for L3 MIFARE product-based cards
- 92 XX where XX is NxpRdLib error code

**Example:**

Read 16 bytes from MIFARE Ultralight product-based card:

Command: *FF FE 00 00 02 30 00*

Response: *04 67 0F E4 5A D0 4F 85 40 48 00 C0 00 00 00 00 90 00*

Read beyond the memory (get NACK0)

Command: *FF FE 00 00 02 30 A0*

Response: *91 00*

Issue native GET VERSION to MIFARE DESFire card:

Command: *FF FE 00 00 01 60*

Response: *AF 04 01 01 33 00 1A 05 90 00*

Command: *FF FE 00 00 01 AF*

Response: *AF 04 01 01 03 FE 1A 05 90 00*

Command: *FF FE 00 00 01 AF*

Response: *00 04 B3 4F D2 DB 6B 80 99 48 95 00 00 11 20 90 00*


All information provided in this document is subject to legal disclaimers.

© 2023 NXP B.V. All rights reserved.

# 7 Limiting values

The Pegoda CLRD730 desktop reader is USB powered. This requires a limitation of the maximum total power consumption below 2.5 Watts. That corresponds to 5 volts with a maximum supply current of 500 mA over USB. The desktop reader is designed to work in a range of 4.75 Volts to 5.25 Volts and to stay fully functional within this range with a typical power consumption of 300 mA (max. 450 mA).

## 7.1 Contactless reader CLRD730 electrical specifications

**Table 6. Operating range**

| Symbol | Description | Conditions | Min | Typ | Max | Unit |
|---|---|---|---|---|---|---|
| +5 V | +5 V power supply | active reader | 4.75 | 5.00 | 5.25 | V |
| $T_{amb}$ | ambient temperature | - | -10 | +25 | +60 | °C |

**Table 7. Current consumption**

| Symbol | Description | Conditions | Min | Typ | Max | Unit |
|---|---|---|---|---|---|---|
| IC5V | supply current | active, RF on | - | 300 | 450 | mA |

**Table 8. Operating distance**

| Symbol | Description | Conditions | Min | Typ | Max | Unit |
|---|---|---|---|---|---|---|
| DST | operating distance | measured from the center of the antenna | - | 0 – 75 | - | mm |

**Table 9. Interface characteristics**

| Symbol | Description | Conditions | Min | Typ | Max | Unit |
|---|---|---|---|---|---|---|
| USB* | USB 2.0 host | cable length 1 m | - | 12 | - | Mbaud |
| I2C | $I^2C$ controller | cable length max. 1 m | - | 400 kbits/s | up to 3.4 | Mbit/s |
| SWD | SWD (debug) | cable length max. 1 m | - | 400 kbits/s | - | Mbit/s |
| I2C | $I^2C$ host | cable length max. 1 m | - | 400 kbits/s | up to 3.4 | Mbit/s |

(1*) USB 2.0 cable is type USB-A to USB-C cable with a max. length of up-to 1.8 m.


All information provided in this document is subject to legal disclaimers.

© 2023 NXP B.V. All rights reserved.

## 7.2 Overall hardware CLRD730 specifications

**Table 10. Contactless reader CLRD730 specifications**

| | |
|---|---|
| **Antenna (13.56 MHz)** | |
| PCB antenna | PCB antenna 63 mm x 63 mm |
| **Contactless operating frequency** | |
| | 13.56 MHz |
| **Card reading/writing distance** | |
| | Up to 75 mm |
| **Microcontroller** | |
| NFC open microcontroller | PN7642 (Cortex M33 microcontroller with integrated NFC interface and security subsystem) |
| Memory | 256 kB FLASH, 32 kB RAM |
| Clock | 27.12 MHz |
| Operating system | FreeRTOS |
| Security | Symmetric and Asymmetric crypto accelerator |
| **Microcontroller (NFC functionality)** | |
| | ISO 14443 A with up-to 848 kB/s transmission rate |
| | ISO 14443 B with up-to 848 kB/s transmission rate |
| | ISO 15693 / ISO 18000-3 mode 1 |
| | Supports ECP 2.0 |
| RF functionality | Supports full ISO14443, ISO15693, and NFC (ISO 18000-2) to communicate with MIFARE as well as NTAG and ICODE products, with NXP tools like RFIDDiscover, NFC Cockpit other CardTestFramework. |
| Transmitter | 2 W output power, DPC 2.0, AWC |
| Receiver | True AGC, RSSI |
| **MIFARE SAM interface (add-on board)** | |
| Standards | I2C via USB VCOM protocol, S-mode |
| Security | MIFARE SAM AV3 |
| **MIFARE SAM Interface (SAM card)** | |
| Standards | ISO/IEC 7816, T=1, S-Mode |
| Security | MIFARE SAM AV3 |
| **Main communication interfaces** | |
| $I^2C$ controller interface | 1 port, 2 connectors<br>internal DIL 2x4 for SAM add-on board<br>external 4-pin connector: JST SM04B-SRSS-TB<br>Communication speed: 100 kbit/s (standard) / 400 kbit/s / 1 Mbit/s / 3.4 Mbit/s |
| **Host interface (USB 1) – aka DATA PORT-A** | |
| Host Interface | USB 2.0 |
| Transmission Speed | 12 Mbit/s (USB 2.0 full speed) |
| Power Supply | Bus powered, 5 V DC with max. 1 A |


All information provided in this document is subject to legal disclaimers.

© 2023 NXP B.V. All rights reserved.

**Table 10. Contactless reader CLRD730 specifications***...continued*

| | |
|---|---|
| **Power interface (USB 2) – aka POWER PORT-B** | |
| Host Interface | USB 2.0, power supply only |
| Power Supply port only | Bus powered, 5 V DC with max. 1 A |
| **Other communication interfaces (accessible direct on readers printed board)** | |
| $I^2C$ host interface | 1 serial ports; connector type: 4-pin Header;<br>Communication speed: 100 kbit/s (standard) |
| SWD Serial Interface | SWD 10-pin connector (for debug and FW upgrade) |
| Test Pins | IRQ, AD1, IF_SEL0, IF_SEL1, AUX1, AUX2 |
| **Electrical and mechanical specifications** | |
| Power Supply | 5 V DC ±5 %, 400 mA (via »USB-C 1« – dataport), or power supply only (without communication) via second USB 2.0 port (»USB-C 2« - Power Port) |
| Reader Dimensions (L x W x H) | 84 mm x 84 mm x 22 mm |
| Weight | 100 g |
| Operating Temperature | -10 °C … 60 °C (without condensing) |
| Operating Humidity | 5 … 95 % RH |
| Certificates | CE, FCC |


All information provided in this document is subject to legal disclaimers.

© 2023 NXP B.V. All rights reserved.

# 8 Certifications and standards

## 8.1 Electromagnetic compatibility

The Pegoda CLRD730 contactless desktop reader fulfills the following requirements of electromagnetic compatibility: FCC, Part 15, and CE.

## 8.2 FCC Compliance Statement

**NOTE:**

This equipment has been tested and found to comply with the limits for a Class B digital device, according to Part 15 of the FCC Rules. These limits are designed to provide reasonable protection against harmful interference when the equipment is operated in a residential environment. This equipment generates, uses, and can radiate radio frequency energy and, if not installed and used in accordance with the instruction manual, may cause harmful interference to radio communications. However, there is no guarantee that interference will not occur in a particular installation. If this equipment does cause harmful interference to radio or television reception, which can be determined by turning the equipment off and on, the user is encouraged to try to correct the interference by one or more of the following measures:

- Reorient or relocate the receiving antenna.
- Increase the separation between the equipment and receiver.
- Connect the equipment into an outlet on a circuit different from that to which the receiver is connected.
- Consult the dealer or an experienced radio/TV technician for help.

**CAUTION!**

The Federal Communications Commission warns the users that changes or modifications to the unit not expressly approved by the party responsible for compliance could void the user's authority to operate the equipment.

Accessories:

This equipment has been tested and found to comply with the limits of a Class A digital device.

The accessories associated with this equipment are as follows:

- Shielded communication cable

These accessories are required to be used in order to ensure compliance with FCC rules.

| CAUTION | |
|---|---|
| ⚠ | This equipment complies with FCC radiation exposure limits set forth for an uncontrolled environment. In order to avoid the possibility of exceeding the FCC radio frequency exposure limits, human proximity to the antenna shall not be less than 20 cm during normal operation. |

## 8.3 Compliance information according to 47 CFR Part 15, Subpart B

NXP declares that the product CLRC730,

FCC ID: 2ADMJCLRD730

are in conformity with

- 47 CFR Part 15, Subpart B (Clause 15.107 and 15.109) in conjunction with ANSI C63.4:2014
- ICES-003, Issue 7 in conjuction with ANSI C63.4:2014

Operation of this product is subject to the following conditions:


All information provided in this document is subject to legal disclaimers.

© 2023 NXP B.V. All rights reserved.

1. this device may not cause harmful interference

2. this device must accept any interference received, including interference that may cause undesired operation.

Any changes or modifications not expressly approved by the party responsible for compliance could void the user's authority to operate the equipment.

## 8.4 Compliance information according to Article 10.8 of the Radio Equipment Directive 2014/53/EU

The following information is provided per Article 10.8 of the Radio Equipment Directive 2014/53/EU:

(a) Frequency bands in which the equipment operates.

(b) The maximum RF power transmitted.

| PN | RF Technology | Freq. Ranges | Max. Transmitted Power |
|---|---|---|---|
| CLRD730 | RFID | 13.553 – 13.567 MHz | 30 dBm |

EUROPEAN DECLARATION OF CONFORMITY (Simplified DoC per Article 10.9 of the Radio Equipment Directive 2014/53/EU).

This apparatus, namely CLRD730 Contactless Reader, conforms to the Radio Equipment Directive 2014/53/EU.

The full EU Declaration of Conformity for this apparatus can be delivered on request via https://www.nxp.com/mynxp/secure-files.

## 8.5 CE Declaration of Conformity

This Information Technology Equipment has been tested and found to comply with the following European directives:

**Table 11. CE Declaration of Conformity**

| Harmonized standards applied | Description |
|---|---|
| EN 62368-1:2020 + A11:2020 | Health and safety requirements pursuant to § 3 (1) 1. (Article 3(1) a) |
| EN 300 330 | Air interface of the radio systems pursuant to § 3(2) (Article 3(2)) |
| EN 303 446-1 | Electromagnetic compatibility (EMC) standard for combined and/or integrated radio and non-radio equipment; Part 1: Requirements for equipment intended to be used in residential, commercial and light industry locations; Harmonized standard covering the essential requirements of article 3.1 (b) of Directive 2014/53/EU |
| EN 301 489-1 | ElectroMagnetic Compatibility (EMC) standard for radio equipment and services; Part 1: Common technical requirements; Harmonized Standard covering the essential requirements of article 3.1(b) of Directive 2014/53/EU and the essential requirements of article 6 of Directive 2014/30/EU |
| EN 301 489-3 | ElectroMagnetic Compatibility (EMC) standard for radio equipment and services; Part 3: Specific conditions for Short-Range Devices (SRD) operating on frequencies between 9 kHz and 246 GHz; Harmonized standard covering the essential requirements of article 3.1(b) of Directive 2014/53/EU |
| EN 301 489-17 | ElectroMagnetic Compatibility (EMC) standard for radio equipment and ElectroMagnetic Compatibility (EMC) standard for radio equipment and services; Part 17: Specific conditions for Broadband Data Transmission Systems; Harmonized Standard covering the essential requirements of<br>article 3.1(b) of Directive 2014/53/EU |
| EN 61000-3-2 | Electromagnetic compatibility - Limits for harmonic current emissions |


All information provided in this document is subject to legal disclaimers.

© 2023 NXP B.V. All rights reserved.

**Table 11. CE Declaration of Conformity***...continued*

| Harmonized standards applied | Description |
|---|---|
| EN 61000-3-3 | Electromagnetic compatibility - Limitation of voltage fluctuations and flicker in low-voltage supply systems |
| EN 61000-4-2 | Electromagnetic compatibility – Electronic discharge immunity test |
| EN 61000-4-3 | Electromagnetic compatibility – Radiated radio-frequency electromagnetic field immunity test |
| EN 61000-4-4 | Electromagnetic compatibility - Electrical Fast Transient / Burst immunity test |
| EN 61000-4-5 | Electromagnetic compatibility – Surge immunity test |
| EN 61000-4-6 | Electromagnetic compatibility – Immunity to conducted disturbances induced by radio fields |
| EN 61000-4-11 | Electromagnetic compatibility – Voltage dips, short interruptions and voltage immunity test |

# 9 Note about the source code in the document

Example code shown in this document has the following copyright and BSD-3-Clause license:

Copyright 2023 NXP Redistribution and use in source and binary forms, with or without modification, are permitted provided that the following conditions are met:

1. Redistributions of source code must retain the above copyright notice, this list of conditions and the following disclaimer.
2. Redistributions in binary form must reproduce the above copyright notice, this list of conditions and the following disclaimer in the documentation and/or other materials must be provided with the distribution.
3. Neither the name of the copyright holder nor the names of its contributors may be used to endorse or promote products derived from this software without specific prior written permission.

THIS SOFTWARE IS PROVIDED BY THE COPYRIGHT HOLDERS AND CONTRIBUTORS "AS IS" AND ANY EXPRESS OR IMPLIED WARRANTIES, INCLUDING, BUT NOT LIMITED TO, THE IMPLIED WARRANTIES OF MERCHANTABILITY AND FITNESS FOR A PARTICULAR PURPOSE ARE DISCLAIMED. IN NO EVENT SHALL THE COPYRIGHT HOLDER OR CONTRIBUTORS BE LIABLE FOR ANY DIRECT, INDIRECT, INCIDENTAL, SPECIAL, EXEMPLARY, OR CONSEQUENTIAL DAMAGES (INCLUDING, BUT NOT LIMITED TO, PROCUREMENT OF SUBSTITUTE GOODS OR SERVICES; LOSS OF USE, DATA, OR PROFITS; OR BUSINESS INTERRUPTION) HOWEVER CAUSED AND ON ANY THEORY OF LIABILITY, WHETHER IN CONTRACT, STRICT LIABILITY, OR TORT (INCLUDING NEGLIGENCE OR OTHERWISE) ARISING IN ANY WAY OUT OF THE USE OF THIS SOFTWARE, EVEN IF ADVISED OF THE POSSIBILITY OF SUCH DAMAGE.

# 10 Abbreviations

**Table 12. Abbreviations**

| Acronym | Description |
|---|---|
| AES | Advanced Encryption Standard |
| CCID | chip card interface device |
| CL | contactless |
| CT | contact |
| ECC | elliptic curve cryptography |
| I2C | inter-integrated circuit |


All information provided in this document is subject to legal disclaimers.

© 2023 NXP B.V. All rights reserved.

**Table 12. Abbreviations**...*continued*

| | |
|---|---|
| MCU | microcontroller unit |
| NFC | near-field communication |
| PCB | printed-circuit board |
| PC/SC | personal computer/smart card |
| RSA | Rivest, Shamir, and Adleman public key cryptosystem |
| SAM | secure access module |
| USB | universal serial bus |
| TDES | Triple Data Encryption Standard |
| VCOM | virtual COM |


All information provided in this document is subject to legal disclaimers.

© 2023 NXP B.V. All rights reserved.

# 11 Revision history

**Table 13. Revision history**

| Document ID | Release date | Data sheet status | Supersedes |
|---|---|---|---|
| CLRD730 v.3.1 | 20230831 | Product data sheet | CLRD730 |
| Modification | • changed title to be in line with the webpage<br>• added statement on FCC in chapter 8.2<br>• added topic with note on source code | | |
| CLRD730 v.3.0 | 20230706 | Product data sheet | - |
| | • Initial version<br>• The master/slave replacement into controller/target in this document follows the recommendation of the NXP – I2C standards organization. | | |


All information provided in this document is subject to legal disclaimers.

© 2023 NXP B.V. All rights reserved.

# 12 Legal information

## 12.1 Data sheet status

| Document status[1][2] | Product status[3] | Definition |
|---|---|---|
| Objective [short] data sheet | Development | This document contains data from the objective specification for product development. |
| Preliminary [short] data sheet | Qualification | This document contains data from the preliminary specification. |
| Product [short] data sheet | Production | This document contains the product specification. |

[1] Please consult the most recently issued document before initiating or completing a design.
[2] The term 'short data sheet' is explained in section "Definitions".
[3] The product status of device(s) described in this document may have changed since this document was published and may differ in case of multiple devices. The latest product status information is available on the Internet at URL http://www.nxp.com.

## 12.2 Definitions

**Draft** — A draft status on a document indicates that the content is still under internal review and subject to formal approval, which may result in modifications or additions. NXP Semiconductors does not give any representations or warranties as to the accuracy or completeness of information included in a draft version of a document and shall have no liability for the consequences of use of such information.

**Short data sheet** — A short data sheet is an extract from a full data sheet with the same product type number(s) and title. A short data sheet is intended for quick reference only and should not be relied upon to contain detailed and full information. For detailed and full information see the relevant full data sheet, which is available on request via the local NXP Semiconductors sales office. In case of any inconsistency or conflict with the short data sheet, the full data sheet shall prevail.

**Product specification** — The information and data provided in a Product data sheet shall define the specification of the product as agreed between NXP Semiconductors and its customer, unless NXP Semiconductors and customer have explicitly agreed otherwise in writing. In no event however, shall an agreement be valid in which the NXP Semiconductors product is deemed to offer functions and qualities beyond those described in the Product data sheet.

## 12.3 Disclaimers

**Limited warranty and liability** — Information in this document is believed to be accurate and reliable. However, NXP Semiconductors does not give any representations or warranties, expressed or implied, as to the accuracy or completeness of such information and shall have no liability for the consequences of use of such information. NXP Semiconductors takes no responsibility for the content in this document if provided by an information source outside of NXP Semiconductors.

In no event shall NXP Semiconductors be liable for any indirect, incidental, punitive, special or consequential damages (including - without limitation - lost profits, lost savings, business interruption, costs related to the removal or replacement of any products or rework charges) whether or not such damages are based on tort (including negligence), warranty, breach of contract or any other legal theory.

Notwithstanding any damages that customer might incur for any reason whatsoever, NXP Semiconductors' aggregate and cumulative liability towards customer for the products described herein shall be limited in accordance with the Terms and conditions of commercial sale of NXP Semiconductors.

**Right to make changes** — NXP Semiconductors reserves the right to make changes to information published in this document, including without limitation specifications and product descriptions, at any time and without notice. This document supersedes and replaces all information supplied prior to the publication hereof.

**Suitability for use** — NXP Semiconductors products are not designed, authorized or warranted to be suitable for use in life support, life-critical or safety-critical systems or equipment, nor in applications where failure or malfunction of an NXP Semiconductors product can reasonably be expected to result in personal injury, death or severe property or environmental damage. NXP Semiconductors and its suppliers accept no liability for inclusion and/or use of NXP Semiconductors products in such equipment or applications and therefore such inclusion and/or use is at the customer's own risk.

**Applications** — Applications that are described herein for any of these products are for illustrative purposes only. NXP Semiconductors makes no representation or warranty that such applications will be suitable for the specified use without further testing or modification.

Customers are responsible for the design and operation of their applications and products using NXP Semiconductors products, and NXP Semiconductors accepts no liability for any assistance with applications or customer product design. It is customer's sole responsibility to determine whether the NXP Semiconductors product is suitable and fit for the customer's applications and products planned, as well as for the planned application and use of customer's third party customer(s). Customers should provide appropriate design and operating safeguards to minimize the risks associated with their applications and products.

NXP Semiconductors does not accept any liability related to any default, damage, costs or problem which is based on any weakness or default in the customer's applications or products, or the application or use by customer's third party customer(s). Customer is responsible for doing all necessary testing for the customer's applications and products using NXP Semiconductors products in order to avoid a default of the applications and the products or of the application or use by customer's third party customer(s). NXP does not accept any liability in this respect.

**Limiting values** — Stress above one or more limiting values (as defined in the Absolute Maximum Ratings System of IEC 60134) will cause permanent damage to the device. Limiting values are stress ratings only and (proper) operation of the device at these or any other conditions above those given in the Recommended operating conditions section (if present) or the Characteristics sections of this document is not warranted. Constant or repeated exposure to limiting values will permanently and irreversibly affect the quality and reliability of the device.

**Terms and conditions of commercial sale** — NXP Semiconductors products are sold subject to the general terms and conditions of commercial sale, as published at http://www.nxp.com/profile/terms, unless otherwise agreed in a valid written individual agreement. In case an individual agreement is concluded only the terms and conditions of the respective agreement shall apply. NXP Semiconductors hereby expressly objects to applying the customer's general terms and conditions with regard to the purchase of NXP Semiconductors products by customer.

**No offer to sell or license** — Nothing in this document may be interpreted or construed as an offer to sell products that is open for acceptance or the grant, conveyance or implication of any license under any copyrights, patents or other industrial or intellectual property rights.


All information provided in this document is subject to legal disclaimers.

© 2023 NXP B.V. All rights reserved.

**Quick reference data** — The Quick reference data is an extract of the product data given in the Limiting values and Characteristics sections of this document, and as such is not complete, exhaustive or legally binding.

**Export control** — This document as well as the item(s) described herein may be subject to export control regulations. Export might require a prior authorization from competent authorities.

**Suitability for use in non-automotive qualified products** — Unless this document expressly states that this specific NXP Semiconductors product is automotive qualified, the product is not suitable for automotive use. It is neither qualified nor tested in accordance with automotive testing or application requirements. NXP Semiconductors accepts no liability for inclusion and/or use of non-automotive qualified products in automotive equipment or applications.

In the event that customer uses the product for design-in and use in automotive applications to automotive specifications and standards, customer (a) shall use the product without NXP Semiconductors' warranty of the product for such automotive applications, use and specifications, and (b) whenever customer uses the product for automotive applications beyond NXP Semiconductors' specifications such use shall be solely at customer's own risk, and (c) customer fully indemnifies NXP Semiconductors for any liability, damages or failed product claims resulting from customer design and use of the product for automotive applications beyond NXP Semiconductors' standard warranty and NXP Semiconductors' product specifications.

**Translations** — A non-English (translated) version of a document, including the legal information in that document, is for reference only. The English version shall prevail in case of any discrepancy between the translated and English versions.

**Security** — Customer understands that all NXP products may be subject to unidentified vulnerabilities or may support established security standards or specifications with known limitations. Customer is responsible for the design and operation of its applications and products throughout their lifecycles to reduce the effect of these vulnerabilities on customer's applications and products. Customer's responsibility also extends to other open and/or proprietary technologies supported by NXP products for use in customer's applications. NXP accepts no liability for any vulnerability. Customer should regularly check security updates from NXP and follow up appropriately.

Customer shall select products with security features that best meet rules, regulations, and standards of the intended application and make the ultimate design decisions regarding its products and is solely responsible for compliance with all legal, regulatory, and security related requirements concerning its products, regardless of any information or support that may be provided by NXP.

NXP has a Product Security Incident Response Team (PSIRT) (reachable at PSIRT@nxp.com) that manages the investigation, reporting, and solution release to security vulnerabilities of NXP products.

**NXP B.V.** — NXP B.V. is not an operating company and it does not distribute or sell products.

## 12.4 Licenses

**Purchase of NXP ICs with NFC technology** — Purchase of an NXP Semiconductors IC that complies with one of the Near Field Communication (NFC) standards ISO/IEC 18092 and ISO/IEC 21481 does not convey an implied license under any patent right infringed by implementation of any of those standards. Purchase of NXP Semiconductors IC does not include a license to any NXP patent (or other IP right) covering combinations of those products with other products, whether hardware or software.

## 12.5 Trademarks

Notice: All referenced brands, product names, service names, and trademarks are the property of their respective owners.

**NXP** — wordmark and logo are trademarks of NXP B.V.

**DESFire** — is a trademark of NXP B.V.

**ICODE and I-CODE** — are trademarks of NXP B.V.

**MIFARE** — is a trademark of NXP B.V.

**MIFARE Classic** — is a trademark of NXP B.V.

**MIFARE Plus** — is a trademark of NXP B.V.

**MIFARE Ultralight** — is a trademark of NXP B.V.

**NTAG** — is a trademark of NXP B.V.

**Qwiic** — is a trademark of SparkFun Electronics.


All information provided in this document is subject to legal disclaimers.

© 2023 NXP B.V. All rights reserved.

## Tables

Tab. 1. Ordering information ....4
Tab. 2. Jumper settings – ENABLE USB-C 1 as dataport .... 13
Tab. 3. Resistor settings – ENABLE USB-C 2 as additional Power Supply ....13
Tab. 4. Ordering information ....17
Tab. 5. I2C address setting .... 18
Tab. 6. Operating range .... 24
Tab. 7. Current consumption .... 24
Tab. 8. Operating distance .... 24
Tab. 9. Interface characteristics .... 24
Tab. 10. Contactless reader CLRD730 specifications ....25
Tab. 11. CE Declaration of Conformity ....28
Tab. 12. Abbreviations ....29
Tab. 13. Revision history ....31

## Figures

Fig. 1. Block diagram .... 5
Fig. 2. Angle .... 7
Fig. 3. Back .... 7
Fig. 4. Pegoda CLRD730 desktop reader without CM84 housing (main and antenna board) ....7
Fig. 5. PCB main board - top side .... 8
Fig. 6. Photograph ....8
Fig. 7. PCB main board - bottom side ....8
Fig. 8. Photograph ....8
Fig. 9. Antenna top ....9
Fig. 10. Antenna bottom ....9
Fig. 11. Header J1 for connecting LEDs to main board Peridot 3.1 .... 9
Fig. 12. Header J2 on antenna board is only for stability – to stabilize antenna board connected to Peridot 3.1 board ....10
Fig. 13. Header J5 for connecting antenna coil and matching capacitors to main board Peridot 3.1 .... 10
Fig. 14. Block diagram .... 11
Fig. 15. Application architecture of the “CCID” example ....12
Fig. 16. Contactless reader CLRD730 (PCB Peridot 3.1) – resistor R50 and jumper J10 ....14
Fig. 17. Pegoda CLRD730 desktop reader .... 14
Fig. 18. The PN7642 NFC open controller with antenna connectors (from reader schematics) .... 15
Fig. 19. Resistor settings for PN7642 configuration – VUP option ....16
Fig. 20. I2C controller pins ....17
Fig. 21. I2C host interface (part of reader schematic) .... 18
Fig. 22. Proper jumper settings for I2C host interface ....18
Fig. 23. The top side of the reader CLRD730 with LEDs ....19
Fig. 24. VCOM mode .... 20
Fig. 25. PC/SC mode .... 20


All information provided in this document is subject to legal disclaimers.

© 2023 NXP B.V. All rights reserved.

## Contents

**1 General description ..... 1**
**2 Features and benefits ..... 2**
**3 Applications ..... 3**
**4 Ordering information ..... 4**
**5 Block diagram ..... 5**
**6 Functional description ..... 6**
6.1 USB stack and CCID class implementation ..... 11
6.2 Application architecture ..... 12
6.3 Jumpers setting and resistor mounting ..... 13
6.4 PN7642 NFC open controller settings ..... 15
6.5 I2C interfaces ..... 17
6.5.1 I2C host interface setting ..... 17
6.6 Signaling with LEDs ..... 19
6.7 CLRD730 reader modes and examples ..... 19
6.8 PC/SC mode ..... 21
6.9 Proprietary transparent commands ..... 22
**7 Limiting values ..... 24**
7.1 Contactless reader CLRD730 electrical specifications ..... 24
7.2 Overall hardware CLRD730 specifications ..... 25
**8 Certifications and standards ..... 27**
8.1 Electromagnetic compatibility ..... 27
8.2 FCC Compliance Statement ..... 27
8.3 Compliance information according to 47 CFR Part 15, Subpart B ..... 27
8.4 Compliance information according to Article 10.8 of the Radio Equipment Directive 2014/53/EU ..... 28
8.5 CE Declaration of Conformity ..... 28
**9 Note about the source code in the document ..... 29**
**10 Abbreviations ..... 29**
**11 Revision history ..... 31**
**12 Legal information ..... 32**

Please be aware that important notices concerning this document and the product(s) described herein, have been included in section 'Legal information'.

**© 2023 NXP B.V.** **All rights reserved.**

For more information, please visit: http://www.nxp.com

**Date of release: 31 August 2023**
**Document identifier: CLRD730**