AQUILA

Aquila Fiber Optic Seal – Wireless User's Manual

8401 Washington Pl., N.E. Albuquerque, NM 87113 Ph: 866-996-4874

Version 1.0
December 2014

© 2014 AQUILA. ALL RIGHTS RESERVED

AQUILA. PROPRIETARY

FCC ID: 2ADMLATG-1000

This equipment has been tested and found to comply with the limits for a class B digital device, pursuant to part 15 of the FCC Rules. These limits are designed to provide reasonable protection against harmful interference in a residential installation. This equipment generates, uses and can radiate radio frequency energy and if not installed and used in accordance with the instructions, may cause harmful interference to radio communications. However, there is no guarantee that interference will not occur in a particular installation. If this equipment does cause harmful interference to radio or television reception, which can be determined by turning the equipment off and on, the user is encouraged to try to correct the interference by one or more of the following measures:

* Reorient or relocate the receiving antenna.

* Increase the separation between the equipment and receiver.

* Connect the equipment into an outlet on a circuit different from that to which the receiver is connected.

* Consult the dealer or an experienced radio/TV technician for help.

In order to maintain compliance with FCC regulations, shielded cables must be used with this equipment. Operation with non-approved equipment or unshielded cables is likely to result in interference to radio and TV reception. The user is cautioned that changes and modifications made to the equipment without the approval of manufacturer could void the user's authority to operate this equipment.

This device complies with Part 15 of the FCC Rules. Operation is subject to the following two conditions:
(1) This device may not cause harmful interference and
(2) this device must accept any interference received,
including interference that may cause undesired operation.

© 2014 AQUILA. ALL RIGHTS RESERVED

AUTHORS:

Jim Coffing, Shameel Talcott, Mike Moran, David Johnson, Erik Sanchez, Nelson Rockwood

Software Version:

This document is not affected by software version.

Edition	Issued	Status	Comment
V1.0	**December 2014**	**DRAFT**	**Initial**

Technical Support:

If any problems occur during installation, the Help Desk should be contacted via one of the following methods:

	E-mail	Phone
Help Desk	RMSsupport@aquilagroup.com	1-866-996-4874

© 2014 AQUILA. ALL RIGHTS RESERVED

AQUILA PROPRIETARY

TABLE OF CONTENTS

1 AFOS-WL OVERVIEW 3

1.1 INTRODUCTION TO SYSTEM COMPONENTS 3
1.2 COMPONENT CHECKLIST 4

2 INSTALLATION 6

2.1 AFOS-WL ASSEMBLY 6
2.1.1 Removing the enclosure from cradle 7
2.1.2 Attaching Cradle to asset 7
2.1.3 Routing and placement of fiber loop 7
2.2 CONNECTIONS 8
2.3 AFOS-WL BLUETOOTH PAIRING INSTRUCTIONS 8
2.4 RESETTING THE RECEIVER / ERASE PAIRING INFORMATION 10
2.5 EOLR INSTRUCTIONS 10

3 MAINTENANCE 11

3.1 CHANGING THE BATTERY OF THE AFOS-WL TRANSMITTER 11
3.2 TROUBLE SHOOTING 11
3.3 TECHNICAL SUPPORT: 11

APPENDIX A - AFOS-WL SPECIFICATIONS 12

APPENDIX B - AFOS-WL LED INDICATOR TABLE 13

LIST OF FIGURES

FIGURE 1 - ATG-1000 4
FIGURE 2 - ATG-2000 4
FIGURE 3: AFOS-WL OPTIONAL COMPONENTS 5
FIGURE 4: TOOLS 6
FIGURE 5: ENCLOSURE NOTE: BOARD CONFIGURATION SHOWN IS NOT CONSISTENT WITH THE WIRELESS DEVICE. FIGURE IS TO ILLUSTRATE ENCLOSURE ONLY. 6
FIGURE 6: CRADLE VIEW 6
FIGURE 7: AFOS-WL INSTALLED 7
FIGURE 8: VHB ADHESIVE 7
FIGURE 9: AFOS-WL CONNECTION ILLUSTRATION 8
FIGURE 10 - RECEIVER PAIRING BUTTON 9
FIGURE 11 - TRANSMITTER PAIRING BUTTON 9

© 2014 AQUILA. ALL RIGHTS RESERVED

AQUILA PROPRIETARY

1 AFOS-WL Overview

The Aquila Fiber Optic Seal Wireless (AFOS-WL) is intended to be used in place of an RFID Seal at selected facilities by replacing the wired relay alarm outputs to the GTRI RMS system and local security alarm system. When properly installed, the AFOS-WL will monitor an asset and provide indication of when that asset is in a more vulnerable state. The AFOS-WL features include State-of-Heath communications, fiber loop condition (opened or closed), visual indicators to determine operational state (e.g.; power status, alarms, and/or OK), and two dry contact outputs to interface with alarm monitoring devices.

The AFOS-WL consists of 2 assemblies; an 8 channel receiver (ATG-1000) and up to 8 transmitters (ATG-2000) that are attached to the asset(s). The receiver is powered via a 12VDC barrel jack input. Alarm output connections are terminated at the RMS. The transmitter is battery powered and attached to the asset. A Bluetooth Low Energy Link between the devices allow for continuous monitoring of the transmitter's state-of-health and the current event status of battery, fiber loop, and tamper events.

The transmitter is designed for low power with a goal to run for at least 3 months on a CR123A battery. It operates as a periodic beacon that sends State of Health (SOH) messages to the receiver every 2 seconds.

Since we require an encrypted link to thwart spoofing, we require that the transmitter and receiver are paired using a button press on each device. After an initial pairing session, a transmitter is linked with a receiver. Each endpoint will constantly try to connect and maintain a link with its peer.

The receiver is tasked with monitoring SOH bursts from the transmitter. If the receiver is not connected to its transmitter, it is in alarm state. If the receiver does not receive a SOH packet within a 30 second window (example, if the transmitter has no power) it will trigger an alarm. If the receiver loses link with its peer, it will be in alarm state. Finally, if the receiver receives an alarm trigger SOH or low battery SOH from the transmitter it will be in alarm.

The only non-alarm condition for the receiver is if it has an active connection to each configured transmitter and has received a good SOH message within the last 30 seconds.

1.1 Introduction to System Components

ATG-1000 (Receiver)

Receiver Board – Communicates with up to 8 transmitters to track state-of-health messages and events. When an alarm condition is detected, it opens a double pole-double throw (DPDT) relay. Alarm field connections for the local alarm system panel and the RMS Trigger 3 are terminated at this assembly. When applicable, the use of end-of-line resistors (single or dual ended) can be terminated at this location.

ATG-2000 (Transmitter)

Transmitter Board – The Transmitter Board communicates with the receiver via Bluetooth Low Energy. It's battery powered using a single lithium CR123A cell. The LightGard output trigger and the battery voltage level are monitored by this assembly.

© 2014 AQUILA ALL RIGHTS RESERVED

LightGard Board– Monitors the fiber optic loop and tamper switch if the unit is removed from the asset. The LightGard output signal is internally wired to the transmitter board.

Figure 1 - ATG-1000

Figure 2 - ATG-2000

1.2 Component Checklist

Optional AFOS-WL components and accessories consist of the following:

© 2014 AQUILA ALL RIGHTS RESERVED

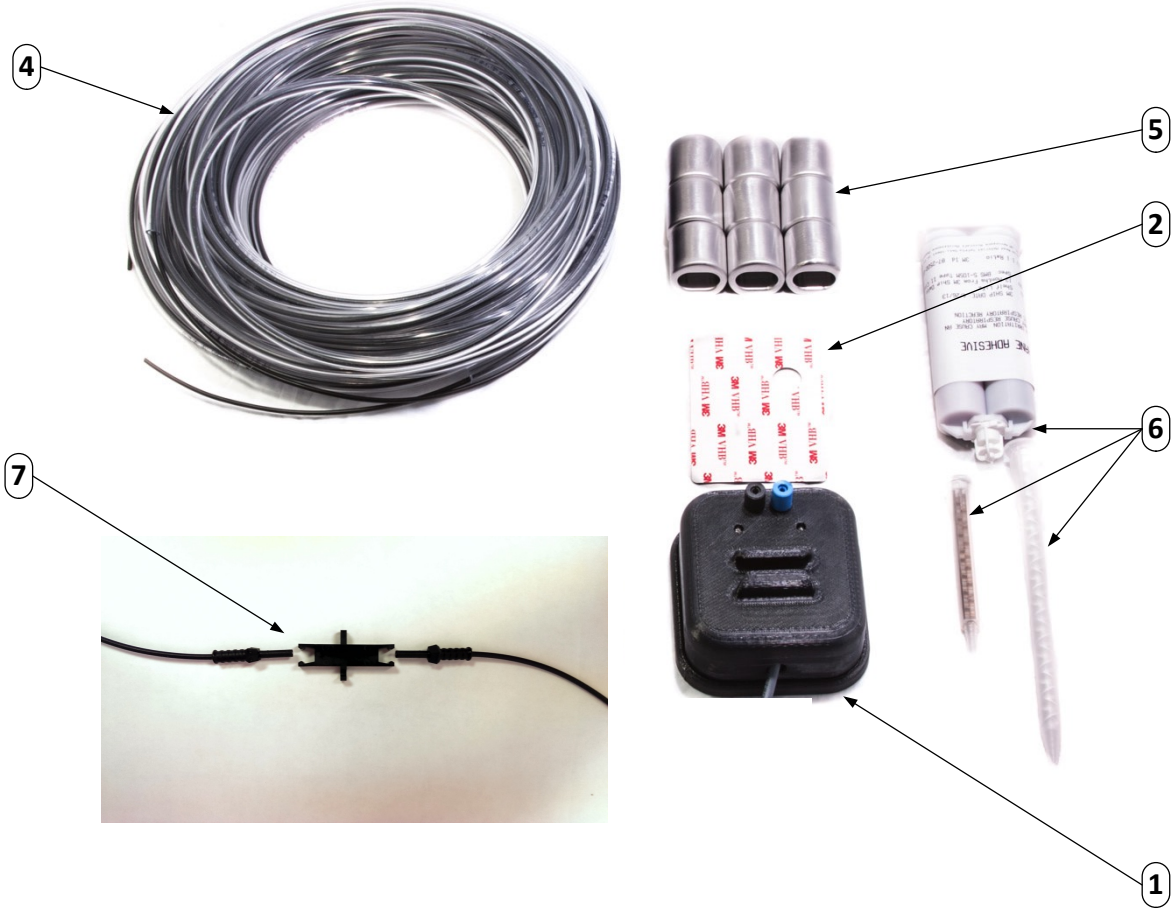

Figure 3: AFOS-WL Optional Components

1. AFOS-WL ATG-2000
2. Cradle Mount Adhesive (*included with the AFOS-WL*)
3. AFOS-WL ATG-1000 (not shown)

<u>Accessories</u>

4. AFOS-FOL-50FPT: Fiber Optic Cable (w/ protective clear sleeve)
5. AFOS-H: Hasps
6. Epoxy and nozzles
7. AFOS-SK: Fiber Splice Kits
8. Isopropyl Alcohol Wipes (not shown)

© 2014 AQUILA ALL RIGHTS RESERVED

AQUILA PROPRIETARY

2 Installation

The necessary tools to accomplish the installation of the AFOS-WL that are not provided are listed below (Figure 5);

Item	Description	P/N
1	Dremel Drill with grinding disk	-
2	Fiber Loop Cutter	AFOS-CL
3	Hot Knife (WCS 541)	AFOS-SHK
5	1/8" flat screwdriver	-
6	#1 Philips screwdriver	-
8	Wire strippers	AFOS-WS
9	6" Scissors	-

Figure 4: Tools

2.1 AFOS-WL Assembly

There are two main parts of the assembly; (1) Enclosure, (2) Cradle. The enclosure houses the electronics and termination points for field installation with 4 screws to retain a back cover plate (refer to Figure 6). The cradle is attached to the asset and retains the enclosure when fully installed (refer to Figure 7).

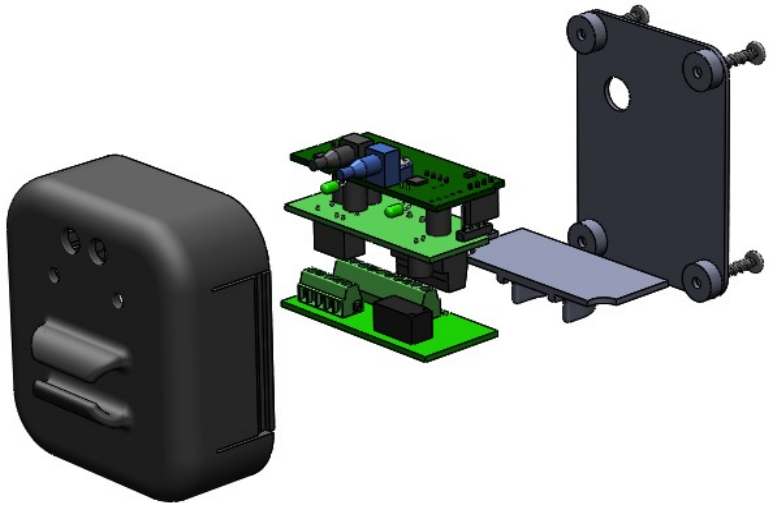

Figure 5: Enclosure NOTE: Board configuration shown is not consistent with the wireless device. Figure is to illustrate enclosure only.

Figure 6: Cradle View

© 2014 AQUILA ALL RIGHTS RESERVED

2.1.1 Removing the enclosure from cradle

The enclosure snaps into the cradle and removed by pressing both retaining tabs on each side to release (refer to Figure 8).

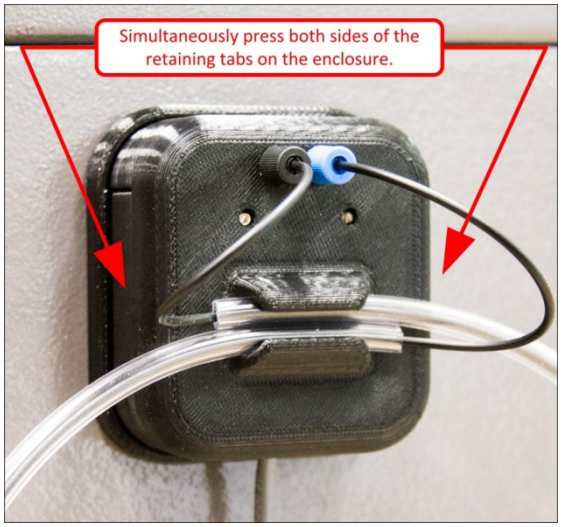

Figure 7: AFOS-WL Installed

2.1.2 Attaching Cradle to asset

The cradle is mounted to an asset by applying the double stick Very High Bonding (VHB) cutout to back of the cradle (refer to Figure 9). Use isopropyl alcohol or similar cleaning agent to remove all dust and oil from the asset before attaching the cradle. Placement of the transmitter to an asset is in accordance with the current wrap guidelines, including the routing of the fiber optic loop and hasp placements.

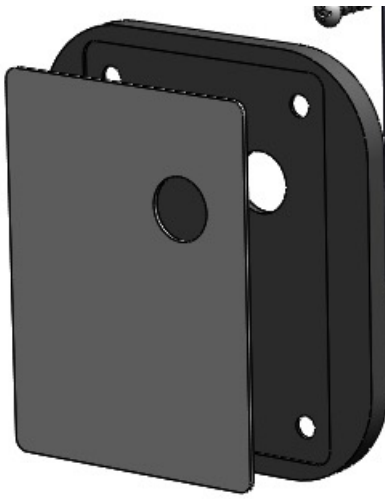

Figure 8: VHB Adhesive

2.1.3 Routing and placement of fiber loop

Placement and routing of the fiber optic loop and hasps are in accordance with the current wrap guidelines.

© 2014 AQUILA ALL RIGHTS RESERVED

AQUILA PROPRIETARY

2.2 Connections

The receiver provides the connections for DC input power and a closed loop non-supervised alarm output.

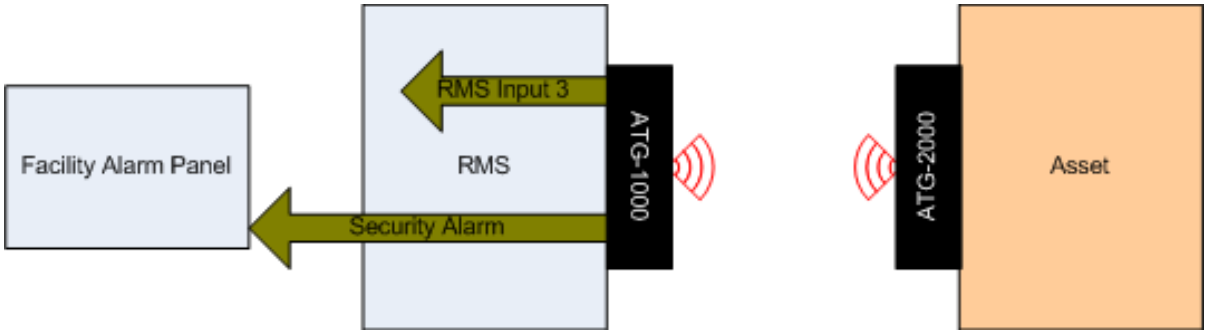

Figure 9: AFOS-WL Connection Illustration

2.3 AFOS-WL BlueTooth Pairing Instructions

In preparation for site installation, the following actions should be accomplished by the facility operator or designated contractor for the installation of AFOS-WL devices:

CAUTION: Do not operate the receiver without the antenna connected to it. Doing so could damage the device.

NOTE: Only attempt to pair one receiver with one transmitter at a time. If you try to pair more than one receiver and/or transmitter at a time, you may inadvertently pair the wrong devices. This will cause confusion.

Step 1. Any transmitter can be paired with any Receiver but the labels are supplied to reduce confusion if multiple AFOS-WL seals are being used. Select the first transmitter you wish to pair with your Receiver.

Step 2. Locate the Bluetooth pairing button on each device (See Figure **10** - Receiver pairing button & Figure **7**: AFOS-WL Installed). Note that you will have to press both buttons within 60 seconds of one another in the following steps so read all of the instructions before proceeding.

© 2014 AQUILA ALL RIGHTS RESERVED

AQUILA PROPRIETARY

Figure 10 - Receiver pairing button

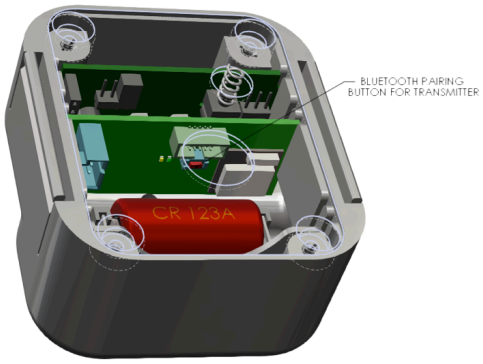

Figure 11 - Transmitter pairing button

NOTE: Take note (write it down) of how you pair the devices in the following steps. The receiver has 8 pairing buttons (1 per channel) and each can be paired with any transmitter. You must manually record which transmitter is paired with which channel on the receiver. Note that all transmitters and receivers are serialized for this purpose. To avoid confusion, only pair one transmitter to receiver channel at a time.

Step 3. Press one of the 8 pairing buttons on the receiver. The green LED above the button will blink slowly (once per second) for 60 seconds. If no pairing is completed within 60 seconds, the LED will stop blinking.

Step 4. Within 60 seconds, press the pairing button on the transmitter that you want to pair with the receiver channel you selected in Step 3. This button should cause an orange LED on the face of the Transmitter to blink, indicating that pairing is in progress. If this does not occur, try removing the battery of the transmitter, re-inserting it and starting again.

NOTE: See Appendix B for a full description of the LED indicators on both the receiver and transmitter.

Step 5. If the pairing initiated steps 3 and 4 completes successfully and the spring tamper switch on the back of the transmitter is open, then the receiver channel LED will blink rapidly, indicating that the pairing was successful and showing an alarm state. If the switch is closed, then the receiver channel's LED will glow solid green, indicating that the pairing was completed and the transmitter is reporting a good state of health (SOH).

NOTE: If the receiver channel's green LED stops blinking and does not remain on, repeat the pairing procedure. For a complete explanation of the LED indicators, see the table in Appendix B.

NOTE: After a Transmitter and Receiver have been paired they will only connect and communicate with each other. If the pair button is pressed on either side after pairing, the same two devices will reestablish their link since the other end still retains and recognizes the address

© 2014 AQUILA ALL RIGHTS RESERVED

of the device that is now in pairing mode. Loss of power to either device will not erase pairing information.

2.4 Resetting the Receiver / Erase Pairing Information

The following steps describe the process to reset the receiver to "factory default" condition and erase all existing pairing information.

Step 1. Unplug the power connection to the receiver, hold down channel buttons 1 and 3 and then reconnect the power.

Step 2. When power is reconnected the LED's will illuminate in a wave pattern across the front of the receiver. After two waves, release channel buttons 1 and 3. All of the LED's will turn off and the receiver will be ready to establish the first new pairing.

NOTE: To erase pairing information for a single channel, press and hold its button for 5 seconds and then release it. The LED will turn off and pairing information will be deleted.

2.5 EOLR Instructions

If an EOLR (End of Line Resistor) is required for the security panel zone alarms, the contractor is to provide resistors of appropriate values.

© 2014 AQUILA ALL RIGHTS RESERVED

AQUILA PROPRIETARY

3 Maintenance

Maintenance of the AFOS-WL is minimal. Only periodic (1-3 months) visual inspection is required for the AFOS-WL transmitter to assure product is firmly attached to asset, fiber loop is secure, and LED's display proper operational status – including battery health. See Appendix B, LED Indicator Table to understand all of the signals.

3.1 Changing the Battery of the AFOS-WL Transmitter

The battery life of the AFOS-WL transmitter is approximately 3 months. If the battery is low the receiver will alarm and the LED for the associated channel will blink green at 2 second intervals. To change the battery, remove the front of the seal by pinching it on both sides and pulling it away from its mount (See section 4.1a of this manual). Replace the battery with a new Lithium CR123A 3V.

3.2 Trouble Shooting

Issue	Repair Procedure
AFOS-WL Transmitter and Receiver lose pairing	Repeat the pairing instructions.
Orange LED of Transmitter does not blink when pairing button is pressed.	This is a very rare problem, only seen once during testing: Remove and replace the battery. If the problem persists, contact Aquila.

3.3 Technical Support:

If any problems occur during installation, the Help Desk should be contacted via one of the following methods:

	E-mail	Phone
Help Desk	RMSsupport@aquilagroup.com	1-866-996-4874

© 2014 AQUILA ALL RIGHTS RESERVED

Appendix A - AFOS-WL Specifications

- Physical Dimensions: 3.100" x 3.350" x 1.350" (L x W x H)
- Power: 10-16VDC @ 0.5A
- Operating:
    - Temperature: 20° F to 120° F (-7° C to 49° C)
    - Relative Humidity: 10 – 85% non-condensing
- Storage:
    - Temperature: -45° F to 145° F (-43° C to 63° C)
    - Relative Humidity: < 80% RH (+/- 10 %)
    - Altitude: < 40,000 ft
- Bluetooth Low Energy Link:
    - Range Unobstructed: 80 ft.

Features: Adaptive frequency hopping to minimize 2.4 GHz interference

© 2014 AQUILA ALL RIGHTS RESERVED

Appendix B - AFOS-WL LED Indicator Table

Receiver	
Channel State	**Meaning**
Green LED on solid	Pairing complete, good state of health (SOH).
Green LED blinking at ½ second interval	Alarm condition Trigger input
Green LED blinking at 1 second interval	Alarm condition Lost connection (Wireless interference, battery power cut) with Transmitter. Will attempt to re-establish for 30 seconds before signaling alarm.
Green LED blinking at 2 second interval	Alarm condition Low Battery on Transmitter
Wave of Green LED's	Power on, Receiver booting up. When holding Channel buttons 1 and 3 to reset receiver, wave will pass repeatedly until buttons are released.
Transmitter	
State	Meaning
Green LED blinking at 1 second interval	Fiber loop closed and tamper switch closed (no alarm).
Green and Red LEDs Blinking at 1 second interval	Alarm State - either or both fiber loop and tamper switch are open Transmitting to Receiver.
Orange LED blinking at ½ second interval	Attempting to pair with Receiver

© 2014 AQUILA ALL RIGHTS RESERVED