Installation Procedure

Bluetooth Tank Level Indicator for Rotarex Capacitive Probes

IMPORTANT ⓘ **It is critical in all installations to ensure monitors' antenna is positioned vertically.** This will achieve optimal signal strength, ensuring that you receive data in a timely manner and prolong the battery life of the monitor.

PLEASE TAKE A MOMENT TO CAREFULLY READ THE INSTALLATION INSTRUCTIONS INCLUDED WITH YOUR MONITORS, AND ENSURE YOU UNDERSTAND AND RESPECT LOCAL REGULATIONS.

Do not pressure wash

WARNING Substitution of components may impair intrinsic safety. For outdoor use only. Explosion Hazard. Batteries are not replaceable on this device. Please contact Otodata if you need a new monitor. Under certain extreme conditions, the non-metallic parts incorporated in the enclosure of this equipment may generate an ignition-capable level of electrostatic charge. Therefore, the equipment shall not be installed in a location where the external conditions can cause build-up of electrostatic charge on such surfaces. In addition, the enclosure shall only be cleaned with a damp cloth.

GRA-0058-EN_008 IM_RCI1010 2023-11-07

Support

+1 (514) 673-0244

+1 (844) 763-3344 (toll-free)
support@otodata.com
otodatatankmonitors.com/support

Emergency Support

Available 24/7
1-833-529-9499

Specifications

Bluetooth tank level indicator for Rotarex capacitive probes

Input

Analog input from Rotarex capacitive probes type 462 or 487

Reporting & Outputs

Reporting	Tank level (5% variation) Low battery High/Excessive draw Fill Detection
Data Interface	API Email (to supplier and/or consumer) Raw data Online dashboard Client mobile app
Automated Testing	Network status Battery status

Electrical Specifications

Refer to markings label for battery pack used

Radio Specifications

Technologies	4G, LTE, CAT1, CATM, NB IOT, 3G Dual SIM Bluetooth

Environmental Specifications

Operating and storage temperature range	-40 ˚C to 60 ˚C	-40 ˚F to 140 ˚F
Relative humidity range	0% to 100%	
Enclosure rating	IP54	
Warranty	2 years	

Certifications

Monitors are third-party certified by Intertek for use in hazardous locations.

Intertek 5028102

United States
Classification: Class I, Zone 0, [AEx ia Ga] IIC T4.
Conforms to UL STDs 60079-11, 60079-0, and 61010-1

Canada
Classification: Class I, Division 1, Groups ABCD [Ex ia Ga] IIC T4. Certified to CSA STDs C22.2# 60079-11, 60079-0, and 61010-1-12

IECEx
Classification: Ex ia IIC T4 Ga
Certificate #: IECEx ETL 23.0008X
Standards applied: IEC 60079-0:2017 – IEC 60079-11:2011

ATEX
Classification: II 1 G Ex ia IIC T4 Ga
Certificate #: ETL22ATEX0283X
Standards applied: EN 60079-0:2017 – EN 60079-11:2011

ASSOCIATED APPARATUS ENTITY PARAMETERS
Uo [V] = 3.9V, Io [mA] = 218mA, Po [mW] = 181mW, Co [μF] = 38.98uF, Lo [μH] = 188.98uH

RADIO CERTIFICATIONS
FCC ID: 2ADQFBEZ01D
IC ID: 12649A-BEZ01D

Dimensions

Height	14 cm	5.5 in
Width	14 cm	5.5 in
Depth	9.5 cm	3.5 in

Ordering

TM5240BG-VA00-CNEE-RC1010*
Rotarex BT, Capacitive Probe and Gen3 Monitor

RC1010
Rotarex BT, Capacitive Probe, No Monitor

**Change "CNEE" for the client's branding code if available*

This device complies with part 15 of the FCC Rules. Changes or modifications not expressly approved by the party responsible for compliance could void the user's authority to operate the equipment. Operation is subject to the following two conditions: (1) This device may not cause harmful interference, and (2) this device must accept any interference received, including interference that may cause undesired operation. **This device is compliant with Industry Canada's RSS standards for license-exempt radio apparatuses.** Authorized use depends on the following two conditions: (1) the device must not create radio interference, and (2) the device user must accept all radio interference, even if this interference could potentially impair its functioning. **This equipment has been tested and found to comply with the limits for a Class B digital device, pursuant to part 15 of the FCC Rules.** These limits are designed to provide reasonable protection against harmful interference in a residential installation. This equipment generates, uses and can radiate radio frequency energy and, if not installed and used in accordance with the instructions, may cause harmful interference to radio communications. However, there is no guarantee that interference will not occur in a particular installation. If this equipment does cause harmful interference to radio or television reception, which can be determined by turning the equipment off and on, the user is encouraged to try to correct the interference by one or more of the following measures: —Reorient or relocate the receiving antenna. —Increase the separation between the equipment and receiver. —Connect the equipment into an outlet on a circuit different from that to which the receiver is connected. —Consult the dealer or an experienced radio/TV technician for help. **To comply with FCC RF exposure compliance recommendations, a separation distance of at least 20 cm must be maintained between the antenna of this device and all persons.**

Device Anatomy

Our handy RC1010 device was designed to fit seamlessly over a Rotarex capacitive probe and make it "smart".

RC1010 will read the tank level data from the Rotarex probe and transmit the information to Otodata's powerful Bluetooth monitor (TM5240BG) positioned nearby.

The TM5240BG monitor will then transmit the level data to the cloud.

RC1010 is compatible with the following Rotarex probes:

Type 487
Stand-alone Tank/Container Level Sensors

Type 462
Cylinder Valves with Integrated level sensors

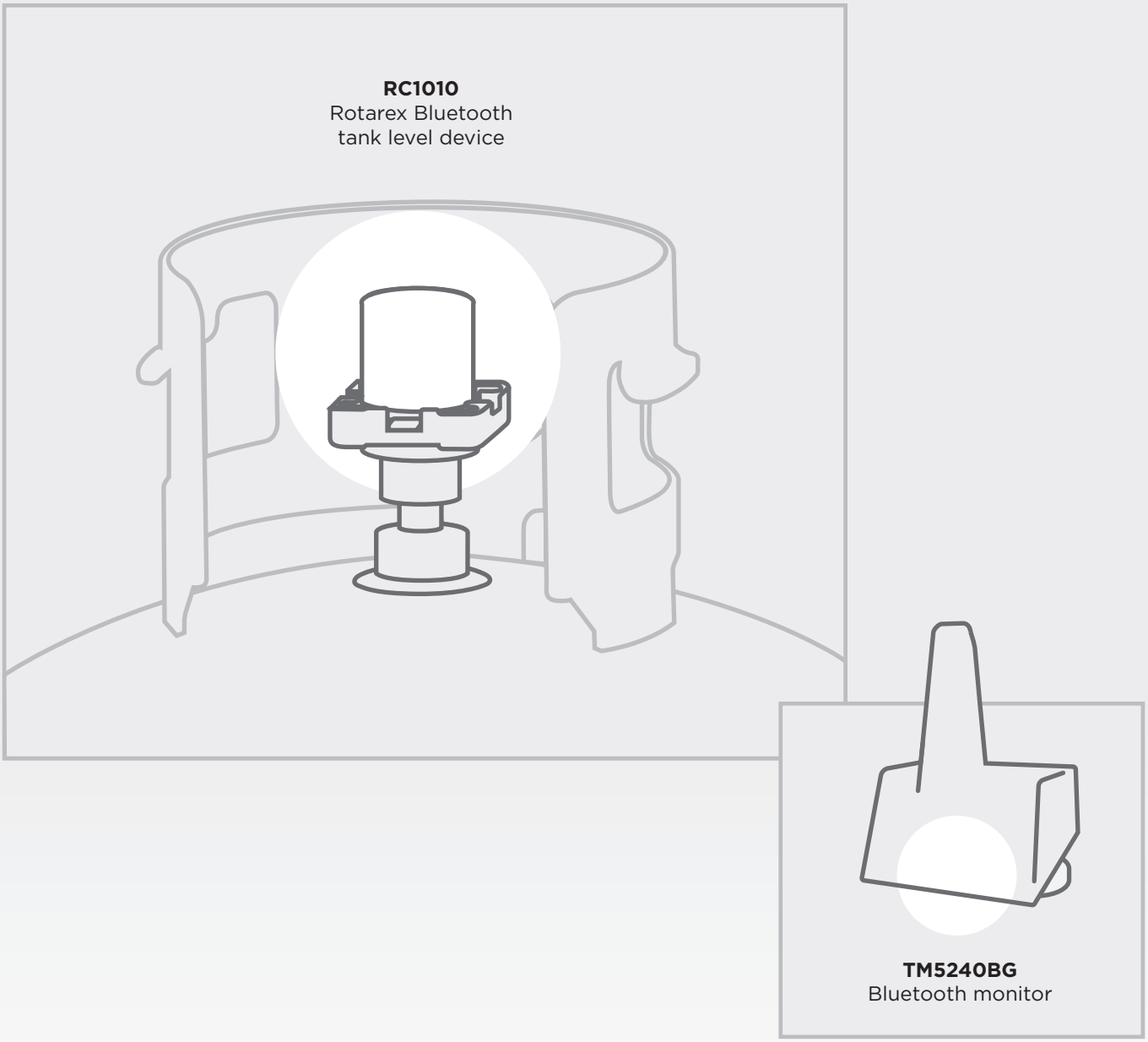

Installation Instructions

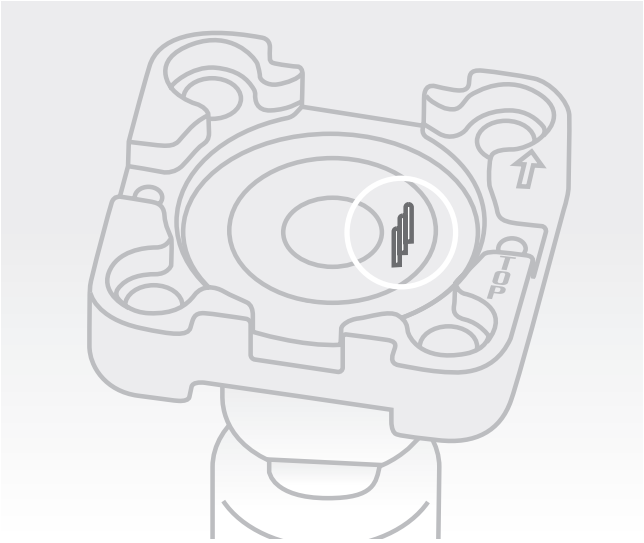

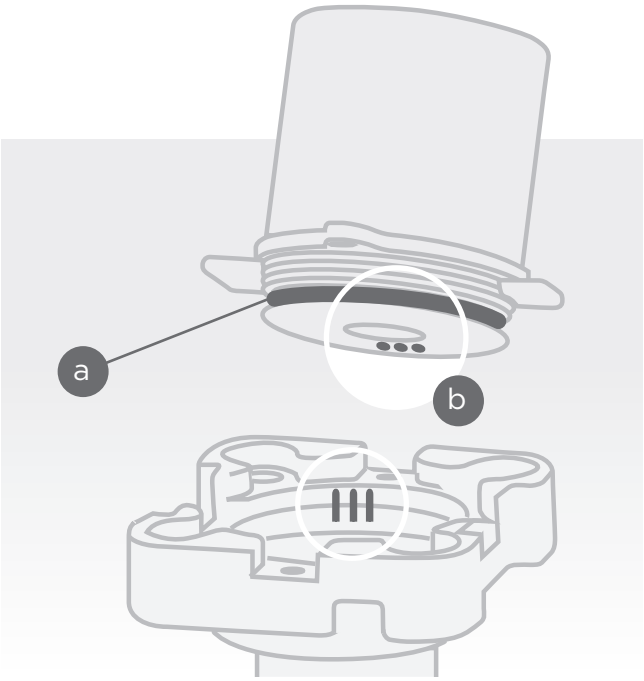

1. **Start clean**

   a. Ensure the seat on the top of the probe is clean, and free of any dirt, grease, or debris.

   b. Locate the three contact pins in the seat and ensure they're straight and even.

2. **Install the RC1010 device**

   a. Verify that the O-ring is seated correctly to prevent water or dust infiltration between the devices.

   b. Note the position of the three holes on the bottom of the RC1010 device and carefully align them to the three pins on the inside of the seat. The asymmetrical brackets will be aligned in their respective seats.

   c. To avoid damaging the O-ring, gently push the RC1010 by alternating from the small asymmetrical bracket towards the large asymmetrical bracket, until the device is entirely seated (be careful not to misalign the device and damage the pins).

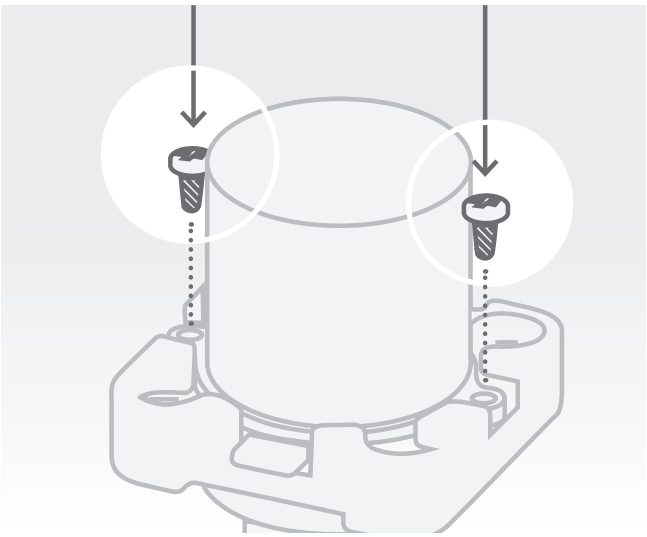

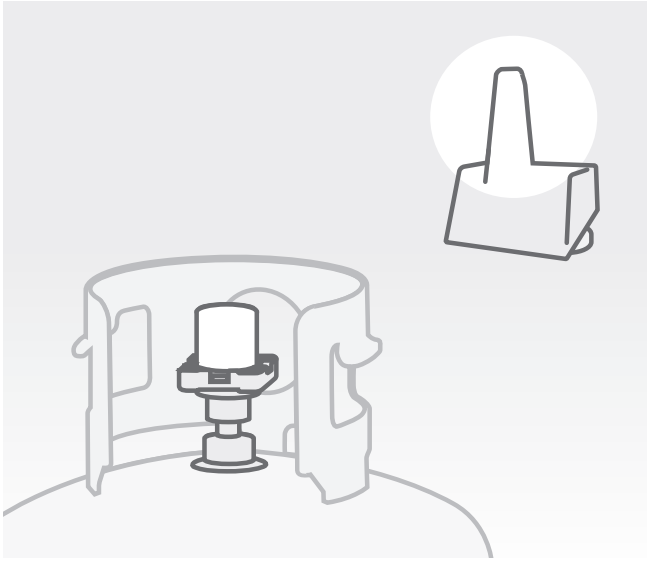

3. **Secure the RC1010 device in place**
   Using the self-threading screws provided, secure the device in place by firmly pressing downward while turning the screws clockwise.

   IMPORTANT DO NOT over-tighten the screws as this could damage the flange.

4. **Install the TM5240BG monitor nearby**
   a. First, locate an area no more than 25-feet from the RC1010 device to install your TM5240BG monitor.

   Note: To ensure optimal signal strength, this area should be free of obstructions and with a clear view to the sky.

   b. Install the TM5240BG monitor by magnetically mounting it to a flat, clean surface.

Members can watch step-by-step installation videos and shop online

Sign up free today

otodatatankmonitors.com/membership

Members can purchase monitors and accessories like gauges, leads, mounting equipment and more via our online store.

IMPORTANT

Please take a moment to carefully read the installation instructions included with your monitors, and ensure you understand and respect local regulations.

ABOVE-GROUND TANKS

Do not install monitors under lids.

UNDERGROUND TANKS

Plastic lid suggested. Metal lids will obstruct signal.

Reading installation instructions will ensure maximum monitoring performance on all your tanks and installations.