TEST REPORT

No. 25B01N000855-002-HAC T-coil

For

UNNECTO HOLDING LIMITED

Mobile Phone

Model Name: Snap

With

Hardware Version: V1.1

Software Version: Unnecto_Snap_V1.0_09042025

FCC ID: 2ADR3USN01

HAC-2019 Compliance: PASS

Issued Date: 2025-06-04

Designation Number: CN1210

Note:

The test results in this test report relate only to the devices specified in this report. This report shall not be reproduced except in full without the written approval of SAICT.

Test Laboratory:

SAICT, Shenzhen Academy of Information and Communications Technology

Building G, Shenzhen International Innovation Center, No.1006 Shennan Road, Futian District, Shenzhen, Guangdong, P. R. China 518000.

Tel:+86(0)755-33322000, Fax:+86(0)755-33322001

Email: yewu@caict.ac.cn. www.saict.ac.cn

REPORT HISTORY

Report Number	Revision	Description	Issue Date
25B01N000855-002-HAC T-coil	Rev.0	1st edition	2025-06-04

©Copyright. All rights reserved by SAICT.

CONTENTS

1. Summary of Test Report 5

1.1. Test Items 5
1.2. Test Standards 5
1.3. Test Result 5
1.4. Testing Location 5
1.5. Project Data 5
1.6. Signature 5

2. Client Information 6

2.1. Applicant Information 6
2.2. Manufacturer Information 6

3. Equipment Under Test (EUT) and Ancillary Equipment (AE) 7

3.1. About EUT 7
3.2. Internal Identification of EUT used during the test 7
3.3. Internal Identification of AE used during the test 7
3.4. Air Interfaces / Bands Indicating Operating Modes 7

4. Reference Documents 8

5. Operational Conditions during Test 9

5.1. HAC Measurement Set-up 9
5.2. AM1D probe 10
5.3. AMCC 10
5.4. AMMI 11
5.5. Test Arch Phantom & Phone Positioner 11
5.6. Robotic System Specifications 12
5.7. T-Coil measurement points and reference plane 12

6. T-Coil Test Procedures 14

7. T-Coil Performance Requirements 16

7.1. T-Coil coupling qualifying field strengths 16
7.2. Frequency response 16
7.3. Desired ABM signal, undesired ABM field qualification requirements 17

8. T-Coil testing for CMRS Voice 18

8.1. GSM Tests Results 18
8.2. WCDMA Tests Results 19

9. T-Coil testing for VoLTE 20

9.1. Test System Setup for VoLTE over IMS T-coil Testing 20
9.2. Codec Configuration 21

©Copyright. All rights reserved by SAICT.

9.3. Radio Configuration 22
9.4. VoLTE Tests Results 22
10. Measurement Uncertainty 23
11. Main Test Instruments 24
ANNEX A: Worst Case Test Plots 25
ANNEX B: Frequency Response Curves 26
ANNEX C: Probe Calibration Certificate 27
ANNEX D: DAE Calibration Certificate 30

©Copyright. All rights reserved by SAICT.

1. Summary of Test Report

1.1. Test Items

Description:	Mobile Phone
Model Name:	Snap
Applicant's Name:	UNNECTO HOLDING LIMITED
Manufacturer's Name:	Shenzhen Frog Technology CO., LTD

1.2. Test Standards

ANSI C63.19:2019

1.3. Test Result

Pass

1.4. Testing Location

Address: Building G, Shenzhen International Innovation Center, No.1006 Shennan Road, Futian District, Shenzhen, Guangdong, P. R. China

1.5. Project Data

Testing Start Date: 2025-05-24 Testing End Date: 2025-05-24

1.6. Signature

Li Yongfu
(Prepared this test report)

Liu Jian
(Reviewed this test report)

Cao Junfei
(Approved this test report)

©Copyright. All rights reserved by SAICT.

2. Client Information

2.1. Applicant Information

Company Name:	UNNECTO HOLDING LIMITED
Address:	13/F HARBOUR COMMERCIAL BUILDING 122-124 CONNAUGHT ROAD CENTRAL SHEUNG WAN HK
Contact:	Pablo Rivera
Email:	pablo.rivera@unnecto.com
Telephone:	+502 55240822

2.2. Manufacturer Information

Company Name:	Shenzhen Frog Technology CO., LTD
Address:	Unit 2208 22F, Changhong Building, South 12 Rd, Southern High-Tech Park, Nanshan District, Shenzhen, P.R. China
Contact:	king
Email:	wchao@ifrogmobile.com
Telephone:	+86 18682090896

©Copyright. All rights reserved by SAICT.

3. Equipment Under Test (EUT) and Ancillary Equipment (AE)

3.1. About EUT

Description:	Mobile Phone
Mode Name:	Snap
Condition of EUT as received:	No obvious damage in appearance
Frequency Bands:	GSM 850/1900, WCDMA Band 2/4/5, LTE Band 2/4/5/7/12/13/17/66, Bluetooth

3.2. Internal Identification of EUT used during the test

EUT ID*	IMEI	HW Version	SW Version	Receipt Date
UT01aa	354368099622659	V1.1	Unnecto_Snap_V1.0_09042025	2025-04-24

*EUT ID: is used to identify the test sample in the lab internally.

3.3. Internal Identification of AE used during the test

AE ID*	Description	Model	Manufacturer
AE1	Battery	Snap	Roveylink Electronics Technology(shenzhen)Co.,Ltd

*AE ID: is used to identify the test sample in the lab internally.

3.4. Air Interfaces / Bands Indicating Operating Modes

Air-interface	**Band (MHz)**	**Type**	**C63.19 / tested**	**Simultaneous Transmissions**	**Name of Voice Service**
GSM	GSM 850/1900	VO	Yes	BT, WLAN	CMRS Voice
	GPRS	DT	No	BT, WLAN	NA
WCDMA	B2/B4/B5	VO	Yes	BT, WLAN	CMRS Voice
	HSPA	DT	No	BT, WLAN	NA
LTE (FDD)	2/4/5/7/12/13/17/66	VD	Yes	BT, WLAN	VoLTE
Bluetooth	2.4GHz	DT	No	WWAN	NA

VO: Voice CMRS/PSTN Service Only

VD: Voice CMRS/PSTN and Data Service

DT: Digital Transport

©Copyright. All rights reserved by SAICT.

4. Reference Documents

The following document listed in this section is referred for testing.

Reference	Title	Version
ANSI C63.19	American National Standard for Methods of Measurement of Compatibility Between Wireless Communication Devices and Hearing Aids	2019 Edition
KDB 285076 D01v06r04	Equipment Authorization Guidance for Hearing Aid Compatibility	2023 Edition
KDB 285076 D02v04	Guidance for performing T-Coil tests for air interfaces supporting voice over IP (e.g., LTE and WiFi) to support CMRS based telephone services	2022 Edition

©Copyright. All rights reserved by SAICT.

5. Operational Conditions during Test

5.1. HAC Measurement Set-up

These measurements are performed using the DASY8 automated dosimetric assessment system. It is made by Schmid & Partner Engineering AG (SPEAG) in Zurich, Switzerland. It consists of high precision robotics system (Stäubli), robot controller, Intel Core2 computer, near-field probe, probe alignment sensor. The robot is a six-axis industrial robot performing precise movements. A cell controller system contains the power supply, robot controller, teach pendant (Joystick), and remote control, is used to drive the robot motors. The PC consists of the HP Intel Core21.86 GHz computer with Windows 10 system and HAC Measurement Software DASY8, A/D interface card, monitor, mouse, and keyboard. The Stäubli Robot is connected to the cell controller to allow software manipulation of the robot. A data acquisition electronic (DAE) circuit performs the signal amplification; signal multiplexing, AD-conversion, offset measurements, mechanical surface detection, collision detection, etc. is connected to the Electro-optical coupler (EOC). The EOC performs the conversion from the optical into digital electric signal of the DAE and transfers data to the PC plug-in card.

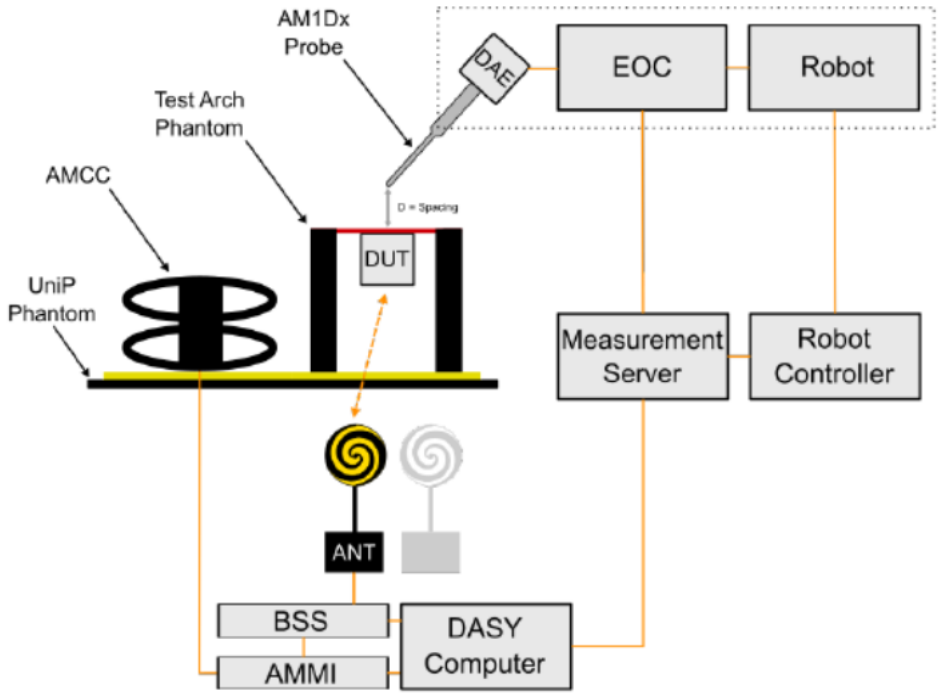

Figure 5.1 HAC Test Measurement Set-up

The DAE4 consists of a highly sensitive electrometer-grade preamplifier with auto-zeroing, a channel and gain-switching multiplexer, a fast 16 bit AD-converter and a command decoder and control logic unit. Transmission to the PC-card is accomplished through an optical downlink for data and status information and an optical uplink for commands and clock lines. The mechanical probe mounting device includes two different sensor systems for frontal and sidewise probe contacts. They are also used for mechanical surface detection and probe collision detection. The robot uses its own controller with a built in VME-bus computer.

©Copyright. All rights reserved by SAICT.

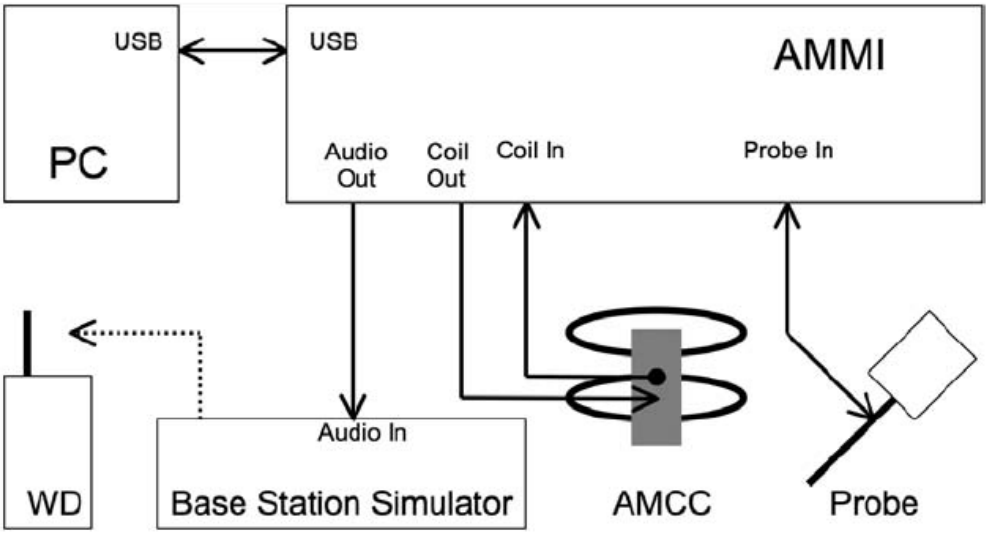

Figure 5.2 T-Coil setup with HAC Test Arch and AMCC

5.2. AM1D probe

The AM1D probe is an active probe with a single sensor. It is fully RF-shielded and has a rounded tip 6mm in diameter incorporating a pickup coil with its center offset 3mm from the tip and the sides. The symmetric signal preamplifier in the probe is fed via the shielded symmetric output cable from the AMMI with a 48V ”phantom” voltage supply. The 7-pin connector on the back in the axis of the probe does not carry any signals. It is mounted to the DAE for the correct orientation of the sensor. If the probe axis is tilted 54.7 degree from the vertical, the sensor is approximately vertical when the signal connector is at the underside of the probe (cable hanging downwards).

Specification:

Frequency range	0.1~20kHz (RF sensitivity < -100dB, fully RF shielded)
Sensitivity	< -50dB A/m @ 1kHz
Pre-amplifier	40dB, symmetric
Dimensions	Tip diameter/length: 6/290mm, sensor according to ANSI-C63.19

5.3. AMCC

The Audio Magnetic Calibration coil is a Helmholtz Coil designed for calibration of the AM1D probe. The two horizontal coils generate a homogeneous magnetic field in the z direction. The DC input resistance is adjusted by a series resistor to approximately 50Ohm, and a shunt resistor of 10Ohm permits monitoring the current with a scale of 1:10

Port description:

Signal	**Connector**	**Resistance**
Coil In	BNC	Typically 50Ohm
Coil Monitor	BNO	10Ohm±1% (100mV corresponding to 1 A/m)

Specification:

Dimensions	370 x 370 x 196 mm, according to ANSI-C63.19

©Copyright. All rights reserved by SAICT.

5.4. AMMI

Figure 5.3 AMMI front panel

The Audio Magnetic Measuring Instrument (AMMI) is a desktop 19-inch unit containing a sampling unit, a waveform generator for test and calibration signals, and a USB interface.
Specification:

Sampling rate	48 kHz / 24 bit
Dynamic range	85 dB
Test signal generation	User selectable and predefined (vis PC)
Calibration	Auto-calibration / full system calibration using AMCC with monitor output
Dimensions	482 x 65 x 270 mm

5.5. Test Arch Phantom & Phone Positioner

The Test Arch phantom should be positioned horizontally on a stable surface. Reference markings on the Phantom allow the complete setup of all predefined phantom positions and measurement grids by manually teaching three points in the robot. It enables easy and well defined positioning of the phone and validation dipoles as well as simple teaching of the robot (Dimensions: 370 x 370 x 370 mm).
The Phone Positioner supports accurate and reliable positioning of any phone with effect on near field <±0.5 dB.

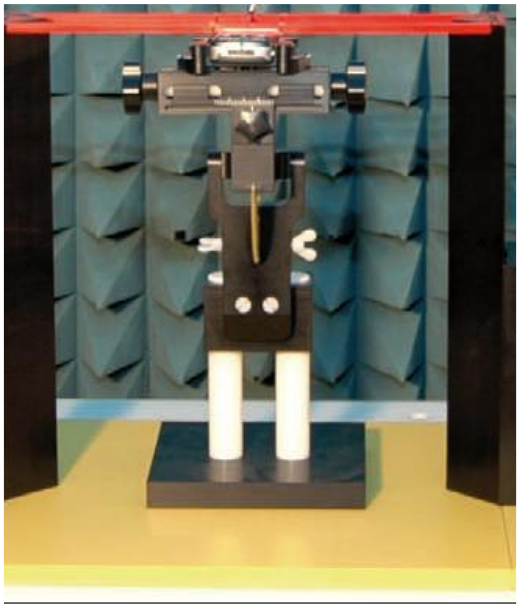

Figure 5.4 HAC Phantom & Device Holder

©Copyright. All rights reserved by SAICT.

5.6. Robotic System Specifications

Specifications

Positioner: Stäubli Unimation Corp. Robot Model: RX160L
Repeatability: ±0.02 mm
No. of Axis: 6

Data Acquisition Electronic (DAE) System

Cell Controller
Processor: Intel Core2
Clock Speed: 1.86 GHz
Operating System: Windows XP
Data Converter
Features: Signal Amplifier, multiplexer, A/D converter, and control logic
Software: DASY5 software
Connecting Lines: Optical downlink for data and status info.
Optical uplink for commands and clock

5.7. T-Coil measurement points and reference plane

The T-Coil measurement plane, reference plane and other measurement parameters shall be:

a) The reference plane is the planar area that contains the highest point in the area of the phone that normally rests against the user's ear. It is parallel to the centerline of the receiver area of the phone and is defined by the points of the receiver-end of the WD handset, which, in normal handset use, rest against the ear.

b) The measurement plane is parallel to, and 10 mm in front of, the reference plane.

c) The reference axis is normal to the reference plane and passes through the center of the acoustic output (or the center of the hole array); or may be centered on or near a secondary inductive source. The actual location of the reference axis and resultant measurement area shall be noted in the test report.

d) The measurement area shall be 50 mm by 50 mm. The measurement area for both desired ABM signal and undesired ABM field may be located where the transverse magnetic measurements are optimum with regard to the requirements. However, the measurement area should be in the vicinity of the acoustic output of the WD and shall be located in the same half of the phone as the WD receiver. In a WD handset with a centered receiver and a circularly symmetrical magnetic field, the measurement axis and the reference axis would coincide.

e) Measurements of desired ABM signal strength and undesired ABM field are made at 2.0 mm +0.5 mm or 4 mm intervals in an X-Y measurement area pattern over the entire measurement area (676 measurement points total); either all measured, or measured plus interpolated.

f) Desired ABM signal frequency response is measured at a single location at or near the maximum desired ABM signal strength location.

g) The actual locations of the measurement points shall be noted in the test report.

©Copyright. All rights reserved by SAICT.

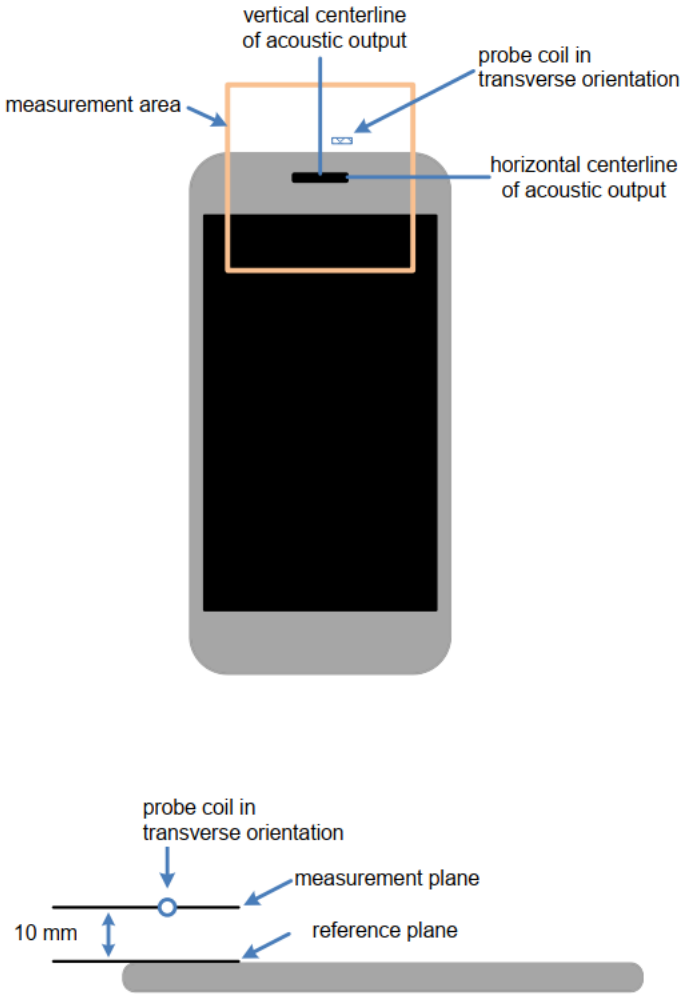

Figure 5.5 Measurement and reference planes probe orientation for WD audio frequency magnetic field measurements

©Copyright. All rights reserved by SAICT.

6. T-Coil Test Procedures

The following steps summarize the basic test flow for determining desired ABM signal and undesired ABM field:

a) A validation of the test setup and instrumentation shall be performed. This may be done using a TMFS or Helmholtz Coil. Measure the emissions and confirm that they are within tolerance of the expected values.

b) Confirm that equipment that requires calibration has been calibrated, and that the noise level meets the requirements given in C63.19-2019 section 6.3.2.

c) Position the WD in the test setup and connect the WD RF connector to a base station simulator.

d) The drive level to the WD is set such that the reference input level specified in Table 6-1 is input to the base station simulator (or manufacturer's test mode equivalent) in the 1 kHz, 1/3 octave band. This drive level shall be used for the T-Coil signal test (desired ABM signal) at f = 1 kHz. Either a sine wave at 1025 Hz, or a voice-like signal, band-limited to the 1 kHz 1/3 octave, shall be used for the reference audio signal. If interference is found at 1025 Hz an alternative nearby reference audio signal frequency may be used.35 The same drive level will be used for the desired ABM signal frequency response measurements at each 1/3 octave band center frequency. The WD volume control may be set at any level up to maximum, provided that a signal at any frequency at maximum modulation would not result in clipping or signal overload.

e) At each measurement location over the measurement area and in the transverse orientation, measure and record the desired 1 kHz T-Coil magnetic signal (desired ABM signal) as described in Step c).

f) At or near a location representing a maximum in the just-measured desired ABM signal, measure and record the desired T-Coil magnetic signals (desired ABM signal at fi) in each individual ISO 266:1975 R10 standard 1/3 octave band. The desired audio band input frequency (fi) shall be centered in each 1/3 octave band maintaining the same drive level as determined in Step c), and the reading taken for that band.36 Equivalent methods of determining the frequency response may also be employed, such as fast Fourier transform (FFT) analysis using noise excitation or input-output comparison using simulated speech. The full-band integrated or half-band integrated probe output, may be used, as long as the appropriate calibration curve is applied to the measured result, so as to yield an accurate measurement of the field magnitude. (The resulting measurement shall be an accurate measurement in dB(A/m).) Compare the frequency response found to the requirements of section 7.

g) At the same locations measured in Step d), measure and record the undesired broadband audio magnetic signal (undesired ABM field) with no audio signal applied (or digital zero applied, if appropriate) using the specified spectral weighting, the half-band integrator followed by the temporal weighting.

h) Calculate and record the location and number of the measurement points that satisfy both the minimum desired ABM signal level and the maximum undesired ABM field level specified. Compare this to the requirements section 7 and record the result.

i) Calculate and record the location and number of the measurement points that satisfy the maximum undesired ABM field level and distribution requirements specified in section 7.

©Copyright. All rights reserved by SAICT.

Table 6-1: T-Coil signal quality categories

Standard	Protocol	Input (dBm0)
TIA-2000	CDMA	-18
TIA/EIA-136	TDMA (50 Hz)	-18
J-STD-007	GSM (217 Hz)	-16
T1/T1P1/3GPP (See Note 1)	UMTS (WCDMA)	-16
iDEN®	TDMA (22 Hz and 11 Hz)	-18
VoIP a (See Note 2)	Voice over Internet Protocol	-16
NOTE 1—For UMTS (Universal Mobile Telecommunications System), refer to 3GPP TS26.131 and TS26.132 (http://www.3gpp.org). NOTE 2—VoIP is used in this table as a general term specifying a group of voice services that use -16 dBm0 as their normal acoustic level. The group includes a variety of voice services, including Voice-over-LTE (VoLTE), Voice-over-IP-multimedia-subsystem (VoIMS), Voice-over-WiFi (VoWiFi) and similar services. For 3G, LTE, and WLAN terminals used for Commercial Mobile Radio Service (CMRS) based telephony, refer to 3GPP TS26.131 and TS26.132.		

©Copyright. All rights reserved by SAICT.

7. T-Coil Performance Requirements

In order to comply with the requirements for T-Coil use, a WD's tested operating modes shall simultaneously meet the requirements for minimum desired ABM signal level and maximum undesired ABM field contained in this part at the minimum specified number of scanned locations.

7.1. T-Coil coupling qualifying field strengths

When measured as specified in ANSI C63.19, there are two groups of qualifying measurement points:

Primary group: A qualifying measurement point shall have its T-Coil signal, desired ABM signal, ≥-18 dB(A/m) at 1 kHz, in a 1/3 octave band filter. These measurements shall be made with the WD operating at a reference input level as specified in Table 6.1. Simultaneously, the qualifying measurement point shall have its weighted magnetic noise, undesired ABM field ≤-38 dB(A/m).

Secondary group: A qualifying measurement point shall have its weighted magnetic noise, undesired ABM field ≤-38 dB(A/m). This group inherently includes all the members of the primary group.

7.2. Frequency response

The frequency response of the axial component of the magnetic field, measured in 1/3 octave bands, shall follow the response curve specified in this sub-clause, over the frequency range 300 Hz to 3000 Hz. Figure 7.1 and Figure 7.2 provide the boundaries for the specified frequency. These response curves are for true field strength measurements of the T-Coil signal. Thus the 6 dB/octave probe response has been corrected from the raw readings.

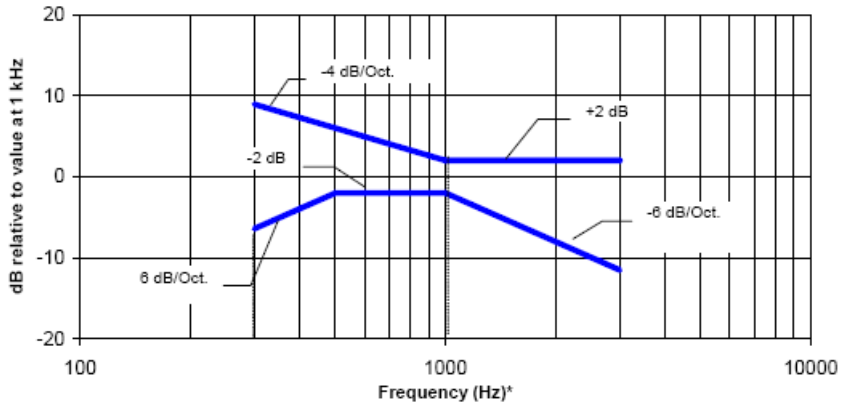

NOTE—Frequency response is between 300 Hz and 3000 Hz.

Figure 7.1—Magnetic field frequency response for WDs with a field ≤ –15 dB (A/m) at 1 kHz

©Copyright. All rights reserved by SAICT.

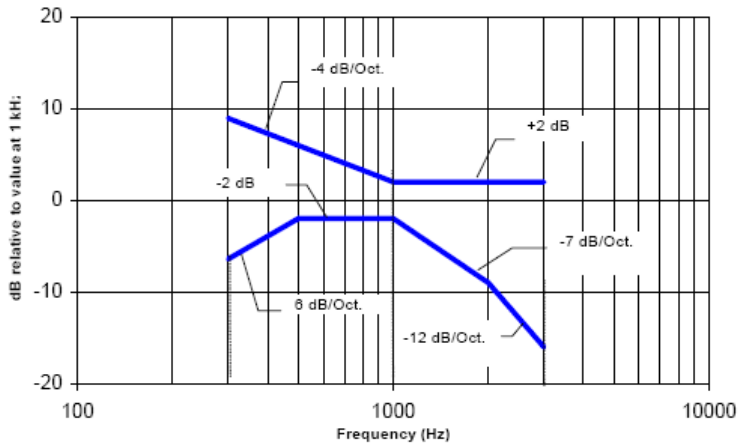

NOTE—Frequency response is between 300 Hz and 3000 Hz.

Figure 7.2—Magnetic field frequency response for WDs with a field that exceeds –15dB(A/m) at 1 kHz

7.3. Desired ABM signal, undesired ABM field qualification requirements

For a WD that is expected to operate primarily in radio access technologies that include 2G GSM for legacy support, the WD shall be qualified for telecoil compatibility one of two ways:

a) The WD shall be rated for telecoil use for all other voice operating modes, exclusive of 2G GSM, according to the section 7.3.1.
b) If the WD is to be rated for telecoil use in its 2G GSM operating modes, these modes shall be qualified according to the section 7.3.2.

7.3.1. Non-2G GSM operating modes

The goal of this requirement is to ensure an adequate area where desired ABM signal is sufficiently strong to be heard clearly and a larger area where undesired ABM field is sufficiently low as to avoid undue annoyance. Qualifying measurement points shall fulfill the requirements of 7.1; both the primary and secondary group requirements shall be met:

The primary group shall include at least 75 measurement points.

The secondary group shall include at least 300 contiguous measurement points.

Additionally, to avoid an oddly shaped area of low noise, the secondary group shall include at least one longitudinal column of at least 10 contiguous qualifying points and at least one transverse row containing at least 15 contiguous qualifying points.

7.3.2. 2G GSM operating modes

If the 2G GSM operating mode(s) are selected for qualification, the qualifying measurement points shall fulfil the requirements of 6.6.2; both the primary and secondary group requirements shall be met:

The primary group shall include at least 25 measurement points.

The secondary group shall include at least 125 contiguous measurement points.

©Copyright. All rights reserved by SAICT.

8. T-Coil testing for CMRS Voice

Note:

1. Bluetooth and WiFi function is turn off and microphone is muted.
2. The volume is adjusted to maximum level during T-Coil testing.
3. Choose worst case from radio configuration investigation. After investigation was performed to determine the audio codec configuration to be used for testing, the following tests results which the worst case codec would be remarked to be used for the testing for the handset.

8.1. GSM Tests Results

<Codec Investigation>

Codec	FR V1	HR V1	Orientation	Band / Channel
Primary Group Contiguous Point Count	**242**	281	Transverse	GSM 850 / 190
Secondary Group Point Count	380	413		
Freq. Response	Pass	Pass		

<Summary Tests Results>

Plot No.	Band	Channel	Primary Group Contiguous Point Count	Secondary Group Point Count	Secondary Group Max Longitudinal	Secondary Group Max Transverse	Freq. Response
1	GSM 850	190	**242**	380	21	26	Pass
2	GSM 1900	661	301	440	23	26	Pass

©Copyright. All rights reserved by SAICT.

8.2. WCDMA Tests Results

<Codec Investigation>

Codec	NB AMR 12.2Kbps	WB AMR 6.6Kbps	Orientation	Band / Channel
Primary Group Contiguous Point Count	466	**447**	Transverse	Band 2 / 9400
Secondary Group Point Count	609	615		
Freq. Response	Pass	Pass		

<Summary Tests Results>

Plot No.	Band	Channel	Primary Group Contiguous Point Count	Secondary Group Point Count	Secondary Group Max Longitudinal	Secondary Group Max Transverse	Freq. Response
3	WCDMA Band 2	9400	**447**	615	26	26	Pass
4	WCDMA Band 4	1413	452	614	26	26	Pass
5	WCDMA Band 5	4182	449	613	26	26	Pass

©Copyright. All rights reserved by SAICT.

9. T-Coil testing for VoLTE

9.1. Test System Setup for VoLTE over IMS T-coil Testing

The general test setup used for VoLTE over IP Multimedia Subsystem (IMS) is shown below. The callbox used when performing VoLTE over IMS T-coil measurements is a CMW500. The Data Application Unit (DAU) of the CMW500 was used to simulate the IP Multimedia Subsystem (IMS) server. According to C63 and KDB 285076 D02v03, VoLTE input level is -20dBm0.

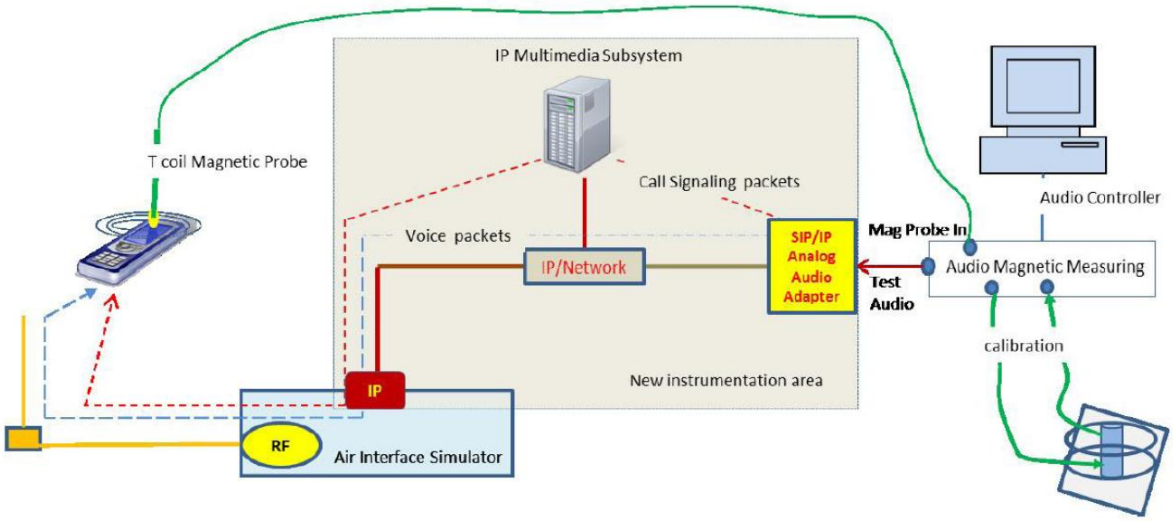

Figure 9.1 Test Setup for VoLTE over IMS T-coil Measurements

No correction gain factors were measured for VoLTE due to the Rohde & Schwarz CMW500, hosting a calibrated audio board. The gains used to measure VoLTE are set to 100. The following software/firmware was used to simulate the VoLTE server for testing:

Firmware	License Keys	Software Name
for LTE	KS500	LTE FDD R8 SIG BASIC
	KS550	LTE TDD R8 SIG BASIC
	KA100	IP APPL ENABLING IPv4
	KA150	IP APPL ENABLING IPv6
for Audio	KAA20	IP APPL IMS BASIC
	KM050	DATA APPL MEAS
	KS104	EVS SPEECH CODEC

©Copyright. All rights reserved by SAICT.

9.2. Codec Configuration

An investigation was performed to determine the audio codec configuration to be used for testing. EVS NB 5.9Kbps setting was used for the audio codec on the CMW500 for VoLTE over IMS T-coil testing. See below table for comparisons between different codecs and codec data rates:

<AMR Codec Investigation>

Codec	NB AMR 4.75Kbps	NB AMR 12.2Kbps	WB AMR 6.6Kbps	WB AMR 23.85Kbps	Orientation	Band / BW / Channel
Primary Group Contiguous Point Count	466	523	547	547	Transverse	LTE Band 2 / 20M / 18900
Secondary Group Point Count	606	617	602	617		
Freq. Response	Pass	Pass	Pass	Pass		

<EVS Codec Investigation>

Codec	EVS NB 5.9Kbps	EVS NB 13.2Kbps	EVS WB 5.9Kbps	EVS WB 13.2Kbps	Orientation	Band / BW / Channel
Primary Group Contiguous Point Count	**413**	501	422	508	Transverse	LTE Band 2 / 20M / 18900
Secondary Group Point Count	622	625	657	659		
Freq. Response	Pass	Pass	Pass	Pass		

<EVS Codec Investigation>

Codec	EVS SWB 9.6 Kbps	EVS SWB 24.4 Kbps	Orientation	Band / BW / Channel
Primary Group Contiguous Point Count	500	500	Transverse	LTE Band 2 / 20M / 18900
Secondary Group Point Count	644	649		
Freq. Response	Pass	Pass		

©Copyright. All rights reserved by SAICT.

9.3. Radio Configuration

An investigation was performed to determine the modulation, the bandwidth configuration and RB configuration to be used for testing. For LTE-FDD bands, 20MHz/10MHz BW, QPSK, 1RB, 0RB offset was used for the testing as the worst-case configuration for the handset. See below table for comparisons between different radios configurations:

<Radio Configuration Investigation>-FDD

Band	Bandwidth (MHz)	Modulation	RB size	RB offset	channel	Primary Group Contiguous Point Count	Secondary Group Point Count
LTE Band 2	20	QPSK	1	0	18900	**413**	622
LTE Band 2	20	QPSK	50	0	18900	425	631
LTE Band 2	20	QPSK	100	0	18900	436	619
LTE Band 2	20	16QAM	1	0	18900	420	626
LTE Band 2	20	64QAM	1	0	18900	445	641
LTE Band 2	15	QPSK	1	0	18900	437	635
LTE Band 2	10	QPSK	1	0	18900	429	610
LTE Band 2	5	QPSK	1	0	18900	436	632
LTE Band 2	3	QPSK	1	0	18900	448	607
LTE Band 2	1.4	QPSK	1	0	18900	431	634

9.4. VoLTE Tests Results

<Summary Tests Results>

Plot No.	Band	Channel	Primary Group Contiguous Point Count	Secondary Group Point Count	Secondary Group Max Longitudinal	Secondary Group Max Transverse	Freq. Response
6	LTE Band 2	18900	413	622	26	26	Pass
7	LTE Band 4	20175	410	624	26	26	Pass
8	LTE Band 5	20525	402	615	26	26	Pass
9	LTE Band 7	21100	417	623	26	26	Pass
10	LTE Band 12	23095	**389**	615	26	26	Pass
11	LTE Band 13	23230	431	635	26	26	Pass
12	LTE Band 17	23790	413	625	26	26	Pass
13	LTE Band 66	132322	446	648	26	26	Pass

©Copyright. All rights reserved by SAICT.

10. Measurement Uncertainty

No.	Error source	Type	Uncertainty Value a_i（%）	Prob. Dist.	Div.	ABM1 ci	ABM2 ci	Std. Unc. ABM1 $u_i^{'}$ (%)	Std. Unc. ABM2 $u_i^{'}$ (%)	Source
1	System Repeatability	A	0.016	N	1	1	1	0.016	0.016	Measurement
Probe Sensitivity										
2	Reference Level	B	3.0	R	√3	1	1	3.0	3.0	Manufacturer
3	AMCC Geometry	B	0.4	R	√3	1	1	0.2	0.2	Manufacturer
4	AMCC Current	B	0.6	R	√3	1	1	0.4	0.4	Manufacturer
5	Probe Positioning during Calibration	B	0.2	R	√3	1	1	0.1	0.1	Manufacturer
6	Noise Contribution	B	0.7	R	√3	0.0143	1	0.0	0.4	Measurement
7	Frequency Slope	B	5.9	R	√3	0.1	1	0.3	3.5	Manufacturer
Probe System										
8	Repeatability / Drift	B	1.0	R	√3	1	1	0.6	0.6	Manufacturer
9	Linearity / Dynamic Range	B	0.6	N	1	1	1	0.4	0.4	Manufacturer
10	Acoustic Noise	B	1.0	R	√3	0.1	1	0.1	0.6	Standard
11	Probe Angle	B	2.3	R	√3	1	1	1.4	1.4	Manufacturer
12	Spectral Processing	B	0.9	R	√3	1	1	0.5	0.5	Manufacturer
13	Integration Time	B	0.6	N	1	1	5	0.6	3.0	Manufacturer
14	Field Distribution	B	0.2	R	√3	1	1	0.1	0.1	Standard
Test Signal										
15	Ref. Signal Spectral Response	B	0.6	R	√3	0	1	0.0	0.4	Manufacturer
Positioning										
16	Probe Positioning	B	1.9	R	√3	1	1	1.1	1.1	Manufacturer
17	Phantom Thickness	B	0.9	R	√3	1	1	0.5	0.5	Manufacturer
18	DUT Positioning	B	1.9	R	√3	1	1	1.1	1.1	Measurement
External Contributions										
19	RF Interference	B	0.0	R	√3	1	0.3	0.0	0.0	Manufacturer
20	Test Signal Variation	B	2.0	R	√3	1	1	1.2	1.2	Manufacturer
Combined standard uncertainty (%)		$u_c^{'} = \sqrt{\sum_{i=1}^{20} c_i^2 u_i^2}$						4.1	6.1	
Expanded uncertainty (Confidence interval of 95 %)		$u_e = 2u_c$		N	$k = 2$			8.2	12.2	

©Copyright. All rights reserved by SAICT.

11. Main Test Instruments

Table 11-1: List of Main Instruments

No.	Name	Type	Serial Number	Calibration Date	Valid Period
01	Audio Magnetic Calibration Coil	AMCC	1105	/	/
02	Audio Measuring Instrument	AMMI	1121	/	/
03	HAC Test Arch	N/A	1150	/	/
04	Audio Magnetic 1D Field Probe	AM1DV3	3086	2024-02-14	Three years
05	DAE	DAE4	786	2024-12-12	One year
06	BTS	CMW500	152499	2024-07-12	One year
07	Software	DASY8	/	/	/

©Copyright. All rights reserved by SAICT.

ANNEX A: Worst Case Test Plots

T-Coil GSM 850 Transverse

Measurement performed on 2025-05-24

T-Coil Coupling Mode Test Report
Results

Primary Group Contiguous Point Count	Secondary Group Point Count	Secondary Group Max Longitudinal	Secondary Group Max Transverse
242	380	21	26

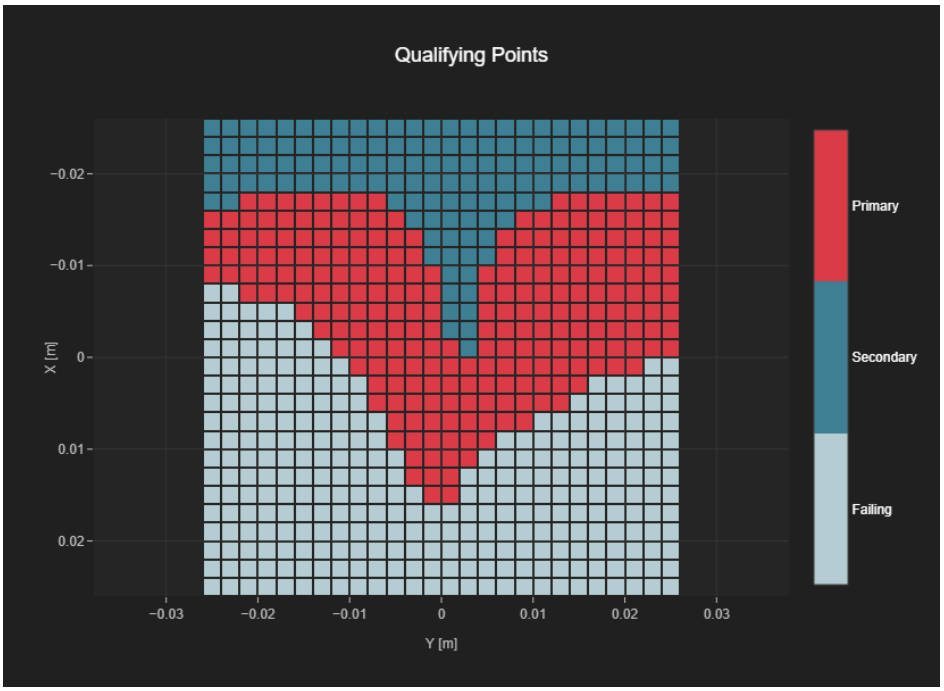

Fig A.1 T-Coil GSM 850

©Copyright. All rights reserved by SAICT.

ANNEX B: Frequency Response Curves

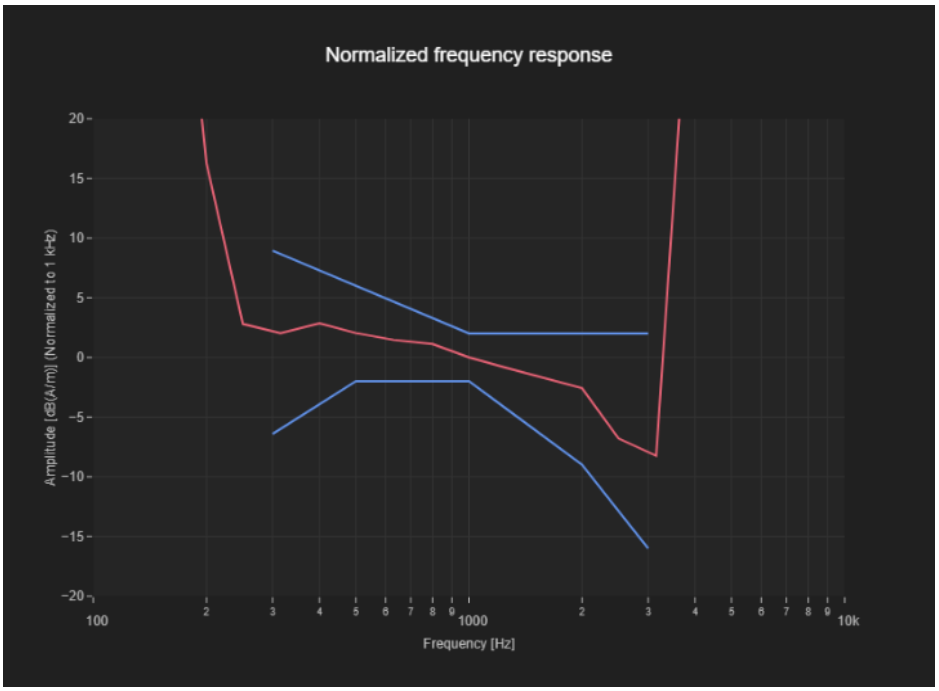

Figure B.1 Frequency Response of GSM 850

©Copyright. All rights reserved by SAICT.

ANNEX C: Probe Calibration Certificate

Calibration Laboratory of
Schmid & Partner
Engineering AG
Zeughausstrasse 43, 8004 Zurich, Switzerland

S Schweizerischer Kalibrierdienst
C Service suisse d'étalonnage
Servizio svizzero di taratura
S Swiss Calibration Service

Accredited by the Swiss Accreditation Service (SAS)
The Swiss Accreditation Service is one of the signatories to the EA Multilateral Agreement for the recognition of calibration certificates

Accreditation No.: SCS 0108

Client **SAICT**
Shenzhen

Certificate No. **AM1DV3-3086_Feb24/2**

CALIBRATION CERTIFICATE (Replacement of No: AM1DV3-3086_Feb24)

Object	AM1DV3 - SN: 3086
Calibration procedure(s)	QA CAL-24.v4 Calibration procedure for AM1D magnetic field probes and TMFS in the audio range
Calibration date:	February 14, 2024

This calibration certificate documents the traceability to national standards, which realize the physical units of measurements (SI).
The measurements and the uncertainties with confidence probability are given on the following pages and are part of the certificate.

All calibrations have been conducted in the closed laboratory facility: environment temperature (22 ± 3)°C and humidity < 70%.

Calibration Equipment used (M&TE critical for calibration)

Primary Standards	ID #	Cal Date (Certificate No.)	Scheduled Calibration
Keithley Multimeter Type 2001	SN: 0810278	29-Aug-23 (No. 37421)	Aug-24
Reference Probe AM1DV3	SN: 3000	09-Oct-23 (No. AM1DV3-3000_Oct23)	Oct-24
DAE4	SN: 781	09-Jan-24 (No. DAE4-781_Jan24)	Jan-25

Secondary Standards	ID #	Check Date (in house)	Scheduled Check
AMCC	SN: 1050	01-Oct-13 (in house check Sep-23)	Sep-26
AMMI Audio Measuring Instrument	SN: 1062	26-Sep-12 (in house check Sep-23)	Sep-26

	Name	Function	Signature
Calibrated by:	Leif Klysner	Laboratory Technician	
Approved by:	Sven Kühn	Technical Manager	

Issued: March 18, 2024

This calibration certificate shall not be reproduced except in full without written approval of the laboratory.

Certificate No: AM1DV3-3086_Feb24/2 Page 1 of 3

©Copyright. All rights reserved by SAICT.

References

[1] ANSI-C63.19-2007
American National Standard for Methods of Measurement of Compatibility between Wireless Communications Devices and Hearing Aids.

[2] ANSI-C63.19-2019 (ANSI-C63.19-2011)
American National Standard, Methods of Measurement of Compatibility between Wireless Communications Devices and Hearing Aids.

[3] DASY System Handbook

Description of the AM1D probe

The AM1D Audio Magnetic Field Probe is a fully shielded magnetic field probe for the frequency range from 100 Hz to 20 kHz. The pickup coil is compliant with the dimensional requirements of [1+2]. The probe includes a symmetric low noise amplifier for the signal available at the shielded 3 pin connector at the side. Power is supplied via the same connector (phantom power supply) and monitored via the LED near the connector. The 7 pin connector at the end of the probe does not carry any signals, but determines the angle of the sensor when mounted on the DAE. The probe supports mechanical detection of the surface.
The single sensor in the probe is arranged in a tilt angle allowing measurement of 3 orthogonal field components when rotating the probe by 120° around its axis. It is aligned with the perpendicular component of the field, if the probe axis is tilted nominally 35.3° above the measurement plane, using the connector rotation and sensor angle stated below.
The probe is fully RF shielded when operated with the matching signal cable (shielded) and allows measurement of audio magnetic fields in the close vicinity of RF emitting wireless devices according to [1+2] without additional shielding.

Handling of the item

The probe is manufactured from stainless steel. In order to maintain the performance and calibration of the probe, it must not be opened. The probe is designed for operation in air and shall not be exposed to humidity or liquids. For proper operation of the surface detection and emergency stop functions in a DASY system, the probe must be operated with the special probe cup provided (larger diameter).

Methods Applied and Interpretation of Parameters

- *Coordinate System:* The AM1D probe is mounted in the DASY system for operation with a HAC Test Arch phantom with AMCC Helmholtz calibration coil according to [3], with the tip pointing to "southwest" orientation.
- *Functional Test:* The functional test preceding calibration includes test of Noise level RF immunity (1kHz AM modulated signal). The shield of the probe cable must be well connected. Frequency response verification from 100 Hz to 10 kHz.
- *Connector Rotation:* The connector at the end of the probe does not carry any signals and is used for fixation to the DAE only. The probe is operated in the center of the AMCC Helmholtz coil using a 1 kHz magnetic field signal. Its angle is determined from the two minima at nominally +120° and –120° rotation, so the sensor in the tip of the probe is aligned to the vertical plane in z-direction, corresponding to the field maximum in the AMCC Helmholtz calibration coil.
- *Sensor Angle:* The sensor tilting in the vertical plane from the ideal vertical direction is determined from the two minima at nominally +120° and –120°. DASY system uses this angle to align the sensor for radial measurements to the x and y axis in the horizontal plane.
- *Sensitivity:* With the probe sensor aligned to the z-field in the AMCC, the output of the probe is compared to the magnetic field in the AMCC at 1 kHz. The field in the AMCC Helmholtz coil is given by the geometry and the current through the coil, which is monitored on the precision shunt resistor of the coil.

©Copyright. All rights reserved by SAICT.

AM1D probe identification and configuration data

Item	**AM1DV3** Audio Magnetic 1D Field Probe
Type No	SP AM1 001 BA
Serial No	**3086**

Overall length	296 mm
Tip diameter	6.0 mm (at the tip)
Sensor offset	3.0 mm (centre of sensor from tip)
Internal Amplifier	20 dB

Manufacturer / Origin	Schmid & Partner Engineering AG, Zurich, Switzerland

Calibration data

Connector rotation angle	(in DASY system)	**203.9 °**	+/- 3.6 ° (k=2)
Sensor angle	(in DASY system)	**0.95 °**	+/- 0.5 ° (k=2)
Sensitivity at 1 kHz	(in DASY system)	**0.00744 V/(A/m)**	+/- 2.2 % (k=2)

The reported uncertainty of measurement is stated as the standard uncertainty of measurement multiplied by the coverage factor k=2, which for a normal distribution corresponds to a coverage probability of approximately 95%.

©Copyright. All rights reserved by SAICT.

ANNEX D: DAE Calibration Certificate

In Collaboration with
s p e a g
CALIBRATION LABORATORY

Add: No.52 HuaYuanBei Road, Haidian District, Beijing, 100191, China
Tel: +86-10-62304633-2117
E-mail: emf@caict.ac.cn http://www.caict.ac.cn

中国认可 国际互认 校准 CALIBRATION CNAS L0570

Client : SAICT Certificate No: 24J02Z000997

CALIBRATION CERTIFICATE

Object	DAE4 - SN: 786
Calibration Procedure(s)	FF-Z11-002-01 Calibration Procedure for the Data Acquisition Electronics (DAEx)
Calibration date:	December 12, 2024

This calibration Certificate documents the traceability to national standards, which realize the physical units of measurements(SI). The measurements and the uncertainties with confidence probability are given on the following pages and are part of the certificate.

All calibrations have been conducted in the closed laboratory facility: environment temperature(22±3)℃ and humidity<70%.

Calibration Equipment used (M&TE critical for calibration)

Primary Standards	ID #	Cal Date(Calibrated by, Certificate No.)	Scheduled Calibration
Process Calibrator 753	1971018	11-Jun-24 (CTTL, No.24J02X005147)	Jun-25

	Name	Function	Signature
Calibrated by:	Yu Zongying	SAR Test Engineer	
Reviewed by:	Lin Jun	SAR Test Engineer	
Approved by:	Qi Dianyuan	SAR Project Leader	

Issued: December 12, 2024

This calibration certificate shall not be reproduced except in full without written approval of the laboratory.

Certificate No: 24J02Z000997 Page 1 of 3

©Copyright. All rights reserved by SAICT.

In Collaboration with
s p e a g
CALIBRATION LABORATORY

CAICT

Add: No.52 HuaYuanBei Road, Haidian District, Beijing, 100191, China
Tel: +86-10-62304633-2117
E-mail: emf@caict.ac.cn http://www.caict.ac.cn

Glossary:

DAE	data acquisition electronics
Connector angle	information used in DASY system to align probe sensor X to the robot coordinate system.

Methods Applied and Interpretation of Parameters:

- *DC Voltage Measurement*: Calibration Factor assessed for use in DASY system by comparison with a calibrated instrument traceable to national standards. The figure given corresponds to the full scale range of the voltmeter in the respective range.
- *Connector angle*: The angle of the connector is assessed measuring the angle mechanically by a tool inserted. Uncertainty is not required.
- The report provide only calibration results for DAE, it does not contain other performance test results.

©Copyright. All rights reserved by SAICT.

In Collaboration with
s p e a g
CALIBRATION LABORATORY

CAICT

Add: No.52 HuaYuanBei Road, Haidian District, Beijing, 100191, China
Tel: +86-10-62304633-2117
E-mail: emf@caict.ac.cn http://www.caict.ac.cn

DC Voltage Measurement

A/D - Converter Resolution nominal
High Range: 1LSB = 6.1μV , full range = -100...+300 mV
Low Range: 1LSB = 61nV , full range = -1.....+3mV
DASY measurement parameters: Auto Zero Time: 3 sec; Measuring time: 3 sec

Calibration Factors	X	Y	Z
High Range	404.144 ± 0.15% (k=2)	404.270 ± 0.15% (k=2)	404.679 ± 0.15% (k=2)
Low Range	3.97206 ± 0.7% (k=2)	3.94199 ± 0.7% (k=2)	3.95761 ± 0.7% (k=2)

Connector Angle

Connector Angle to be used in DASY system	331.5° ± 1 °

*****END OF REPORT*****

©Copyright. All rights reserved by SAICT.