LCD Keypad

User Manual

About this Manual

This Manual is applicable to LCD keypad.

The Manual includes instructions for using and managing the product. Pictures, charts, images and all other information hereinafter are for description and explanation only. The information contained in the Manual is subject to change, without notice, due to firmware updates or other reasons. Please find the latest version in the company website (http://overseas.hikvision.com/en/).

Please use this user manual under the guidance of professionals.

Legal Disclaimer

REGARDING TO THE PRODUCT WITH INTERNET ACCESS, THE USE OF PRODUCT SHALL BE WHOLLY AT YOUR OWN RISKS. OUR COMPANY SHALL NOT TAKE ANY RESPONSIBILITES FOR ABNORMAL OPERATION, PRIVACY LEAKAGE OR OTHER DAMAGES RESULTING FROM CYBER ATTACK, HACKER ATTACK, VIRUS INSPECTION, OR OTHER INTERNET SECURITY RISKS; HOWEVER, OUR COMPANY WILL PROVIDE TIMELY TECHNICAL SUPPORT IF REQUIRED.

SURVEILLANCE LAWS VARY BY JURISDICTION. PLEASE CHECK ALL RELEVANT LAWS IN YOUR JURISDICTION BEFORE USING THIS PRODUCT IN ORDER TO ENSURE THAT YOUR USE CONFORMS THE APPLICABLE LAW. OUR COMPANY SHALL NOT BE LIABLE IN THE EVENT THAT THIS PRODUCT IS USED WITH ILLEGITIMATE PURPOSES.

IN THE EVENT OF ANY CONFLICTS BETWEEN THIS MANUAL AND THE APPLICABLE LAW, THE LATER PREVAILS.

0100001050519

Regulatory Information

FCC Information

Please take attention that changes or modification not expressly approved by the party responsible for compliance could void the user's authority to operate the equipment.

FCC compliance: This equipment has been tested and found to comply with the limits for a Class B digital device, pursuant to part 15 of the FCC Rules. These limits are designed to provide reasonable protection against harmful interference in a residential installation. This equipment generates, uses and can radiate radio frequency energy and, if not installed and used in accordance with the instructions, may cause harmful interference to radio communications. However, there is no guarantee that interference will not occur in a particular installation. If this equipment does cause harmful interference to radio or television reception, which can be determined by turning the equipment off and on, the user is encouraged to try to correct the interference by one or more of the following measures:

—Reorient or relocate the receiving antenna.

—Increase the separation between the equipment and receiver.

—Connect the equipment into an outlet on a circuit different from that to which the receiver is connected.

—Consult the dealer or an experienced radio/TV technician for help.

This equipment should be installed and operated with a minimum distance 20cm between the radiator and your body.

FCC Conditions

This device complies with part 15 of the FCC Rules. Operation is subject to the following two conditions:

1. This device may not cause harmful interference.
2. This device must accept any interference received, including interference that may cause undesired operation

EU Conformity Statement

This product and - if applicable - the supplied accessories too are marked with "CE" and comply therefore with the applicable harmonized European standards listed under the EMC Directive 2014/30/EU, the RE Directive 2014/53/EU, the RoHS Directive 2011/65/EU.

2012/19/EU (WEEE directive): Products marked with this symbol cannot be disposed of as unsorted municipal waste in the European Union. For proper recycling, return this product to your local supplier upon the purchase of equivalent new equipment,

or dispose of it at designated collection points. For more information see: www.recyclethis.info.

2006/66/EC (battery directive): This product contains a battery that cannot be disposed of as unsorted municipal waste in the European Union. See the product documentation for specific battery information. The battery is marked with this symbol, which may include lettering to indicate cadmium (Cd), lead (Pb), or mercury (Hg). For proper recycling, return the battery to your supplier or to a designated collection point. For more information see: www.recyclethis.info.

Industry Canada ICES-003 Compliance

This device meets the CAN ICES-3 (B)/NMB-3(B) standards requirements.

This device complies with Industry Canada licence-exempt RSS standard(s). Operation is subject to the following two conditions:

(1) this device may not cause interference, and

(2) this device must accept any interference, including interference that may cause undesired operation of the device.

Le présent appareil est conforme aux CNR d'Industrie Canada applicables aux appareils radioexempts de licence. L'exploitation est autorisée aux deux conditions suivantes :

(1) l'appareil ne doit pas produire de brouillage, et

(2) l'utilisateur de l'appareil doit accepter tout brouillage radioélectrique subi, même si le brouillage est susceptible d'en compromettre le fonctionnement.

Under Industry Canada regulations, this radio transmitter may only operate using an antenna of a type and maximum (or lesser) gain approved for the transmitter by Industry Canada. To reduce potential radio interference to other users, the antenna type and its gain should be so chosen that the equivalent isotropically radiated power (e.i.r.p.) is not more than that necessary for successful communication.

Conformément à la réglementation d'Industrie Canada, le présent émetteur radio peut fonctionner avec une antenne d'un type et d'un gain maximal (ou inférieur) approuvé pour l'émetteur par Industrie Canada. Dans le but de réduire les risques de brouillage radioélectrique à l'intention des autres utilisateurs, il faut choisir le type d'antenne et son gain de sorte que la puissance isotrope rayonnée équivalente (p.i.r.e.) ne dépasse pas l'intensité nécessaire à l'établissement d'une communication satisfaisante.

Safety Instruction

These instructions are intended to ensure that the user can use the product correctly to avoid danger or property loss.

The precaution measure is divided into 'Warnings' and 'Cautions':

Warnings: Serious injury or death may be caused if any of these warnings are neglected.

Cautions: Injury or equipment damage may be caused if any of these cautions are neglected.

Warnings Follow these safeguards to prevent serious injury or death.	**Cautions** Follow these precautions to prevent potential injury or material damage.

Warnings:

- Please adopt the power adapter which can meet the safety extra low voltage (SELV) standard. The power consumption cannot be less than the required value.
- Do not connect several devices to one power adapter as an adapter overload may cause over-heating and can be a fire hazard.
- When the product is installed on a wall or ceiling, the device should be firmly fixed.
- To reduce the risk of fire or electrical shock, do not expose the indoor used product to rain or moisture.
- This installation should be made by a qualified service person and should conform to all the local codes.
- Please install blackouts equipment into the power supply circuit for convenient supply interruption.
- If the product does not work properly, please contact your dealer or the nearest service center. Never attempt to disassemble the product yourself. (We shall not assume any responsibility for problems caused by unauthorized repair or maintenance.)
- Please do not look directly into the laser light within 6 meters because laser is hazardous to humans.

Cautions:

- Make sure the power supply voltage is correct before using the product.
- Do not drop the product or subject it to physical shock. Do not install the product on vibratory surface or places.
- Do not expose it to high electromagnetic radiating environment.
- Do not aim the lens at the strong light such as sun or incandescent lamp. The strong light can cause fatal damage to the product.
- The sensor may be burned out by a laser beam, so when any laser equipment is being used, make sure that the surface of the sensor not be exposed to the laser beam.
- For working temperature, please refer to the specification manual for details.
- To avoid heat accumulation, good ventilation is required for a proper operating environment.
- While shipping, the product should be packed in its original packing.
- Please use the provided glove when open up the product cover. Do not touch the product cover with fingers directly, because the acidic sweat of the fingers may erode the surface coating of the product cover.
- Please use a soft and dry cloth when clean inside and outside surfaces of the product cover. Do not use alkaline detergents.
- Improper use or replacement of the battery may result in hazard of explosion. Please use the manufactur*er recommended battery type.*

Content

Chapter 1 Introduction _____ *8*

1.1 Overview _____ **8**

1.2 Appearance Description _____ **8**

1.3 Keypad Beeper and Indicator _____ **10**

Chapter 2 Installation and Wiring _____ *13*

2.1 Wiring Connector Description _____ **13**

2.2 Keypad Address Settings _____ **13**

2.3 Keypad Installation _____ **14**

2.4 Keypad Wiring _____ **15**

Chapter 3 Keypad Operation (Local Operation） _____ *15*

3.1 Keypad Alarm Operation Code _____ **15**

Chapter 1 Introduction

1.1 Overview

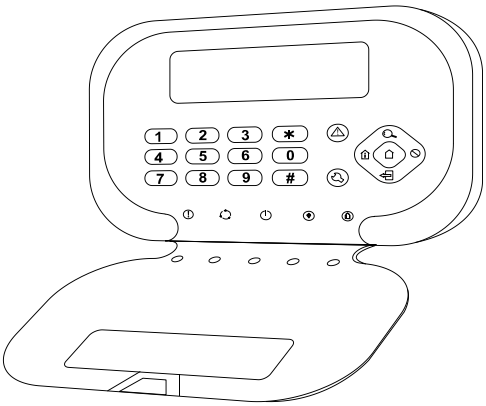

DS-PK00/PK00M/-LCD/LED series LCD/LED alarm keypad are used for connecting to the security control panel. It implements operations on the security control panel through programming and prompts alarm with the indicators and audio alert.

1.2 Appearance Description

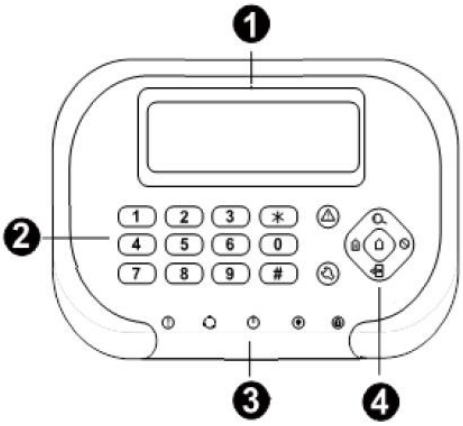

No.	Description
1	LCD Screen
2	Keypad
3	Control Panel
4	Indicator Bar

Control Panel

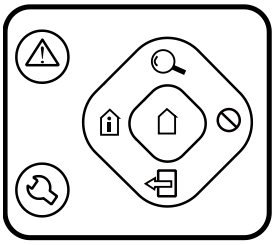

Button	Description
	Panic Button
	Programming Button
	Search Button
	Bypass Button
	Exit Button
	Stay Arming Button
	Away Arming Button

Indicator Bar

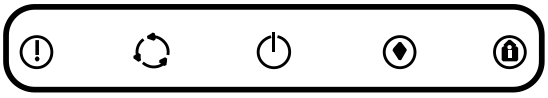

Button	Description
	Status Indicator
	Operating Indicator
	Power Indicator
	Arming Indicator
	Stay Arming Indicator

1.3 Keypad Beeper and Indicator

Beeper Description

No.	Sound Prompt	Description
1	One Beep	Pressing keys prompt; The command is timed out or the command is too long.
2	Two Beeps	Valid command. Uploading the report completed.
3	Five Beeps	Invalid command. Failed to upload the report in 60s.
4	Continuous Beeping For Two Seconds	Fault Prompt
5	Slowly Continuous Beeps	Entry/Exit Delay
6	Rapidly Continuous Beeps	Entry/Exit Delay, less than 10s.
7	Rapid Beeps	Zone Alarm; The keyboard is not registered.
8	Three Long Beeps and Two Short Beeps	The tampering prevention of the keyboard is turned on.
9	Three Beeps	Registering the keyboard completed.
10	One Beep In Two Seconds	Two minutes before auto arming/disarming; One minute before arming for temporary password.
11	Three Beeps In One Second	One minute before auto arming/disarming; 15s before arming for temporary password.

Indicator Description

Status

Working Status	Indicator	Working Status	Indicator
Normal	Solid Green	System Fault	Solid Red

Power

Working Status	Indicator
Power On	Solid Green

Stay

Working Status	Indicator	Working Status	Indicator
Partition Perimeter Disarmed	OFF	Partition System Perimeter Armed	Orange

Arm

Working Status	Indicator	Working Status	Indicator
Partition Armed	Solid Red	Partition System Disarmed	Solid Green
Password Modifying	Flicking Green	Fob Code Matching	Flicking Green
Testing Mode	Solid Red	Programming	Flicking Green

OPERATING

Working Status	Indicator	Working Status	Indicator
Normal	Solid Green	Programming	Flicking Green
Password Modifying	Flicking Green	Fob Code Matching	Flicking Green
Engineering Mode	Solid Red	System Fault	Flicking Orange

LED Zone Indicator

Zone

Working Status	Indicator	Working Status	Indicator
Normal	OFF	Fault	Solid Red
Alarm	Flicking Red	Bypass	Solid Green

Zone Indicator under *Engineering* Mode (The corresponding zone indicator light will turn orange when operating):

No.	Description	No.	Description
1	Off Hook	5	Sending CID Report
2	Dialing	6	Receiving Confirmation
3	Alarm Receiver Off Hook	7	Control Panel On Hook
4	Receiving Handshake	8	Alarm Receiver On Hook

Zone Indicator under *Status* Mode (The corresponding indicator light will be solid red if there is any fault):

No.	Description	No.	Description
1	AC Current Interrupted	5	RS-485 Device Disconnected
2	Low Voltage of Storage Battery	6	Wired Network Exception
3	Movement Prevention of Control Panel Turning On	7	Wireless Network Exception
4	Telephone Line Disconnected	8	Reserved

Chapter 2 Installation and Wiring

2.1 Wiring Connector Description

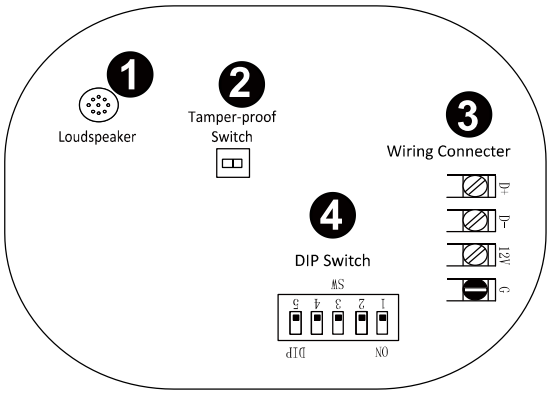

No.	Description
1	Loud Speaker
2	Tamper-Proof Switch
3	Wiring Connector
4	DlP Switch

2.2 Keypad Address Settings

An address is required for each alarm keypad in the system. These addresses cannot be repeated. Once exchanging the alarm keypad, the address of the new keypad must be the same as the replaced one. You should configure the address via DIP switch of the keypad before powering on the system. The address should be in the range of 1~31.

When it is black on the end of **ON** as ■, indicated 1; when it is black on the other end as □, indicated 0.

Keyboard Address ↓	ON 1	2	3	4	DIP 5
00					
01	■				
02		■			
03	■	■			
04			■		
05	■		■		
06		■	■		
07	■	■	■		

Keyboard Address ↓	ON 1	2	3	4	DIP 5
08				■	
09	■			■	
10		■		■	
11	■	■		■	
12			■	■	
13	■		■	■	
14		■	■	■	
15	■	■	■	■	

Keyboard Address ↓	ON 1	2	3	4	DIP 5
16					■
17	■				■
18		■			■
19	■	■			■
20			■		■
21	■		■		■
22		■	■		■
23	■	■	■		■

Keyboard Address ↓	ON 1	2	3	4	DIP 5
24				■	■
25	■			■	■
26		■		■	■
27	■	■		■	■
28			■	■	■
29	■		■	■	■
30		■	■	■	■
31	■	■	■	■	■

2.3 Keypad Installation

Before You Start:

- Make sure that the device in the package is in good condition and all the assembly parts are included.
- Make sure that the wall is strong enough to withstand three times the weight of the keypad.
- Set the keypad address before installation.

Steps:

1. Route the cables through the cable hole of the mounting plate.

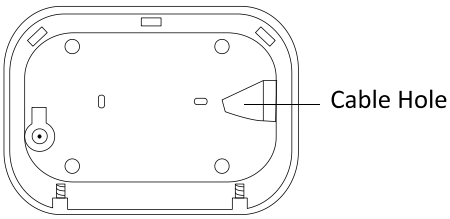

2. Secure the mounting plate on the wall with 4 supplied screws.

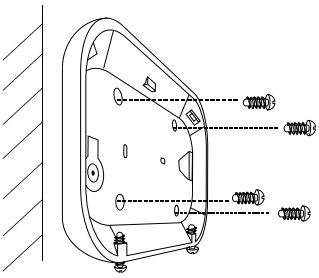

3. Connect the corresponding cables.
4. Push the keypad body in the mounting plate from bottom up.
5. Fasten the keypad body with the three buckles on the plate.

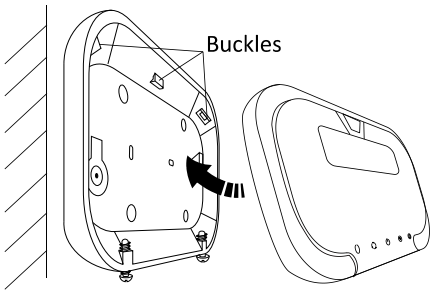

6. Align the screw holes with the screws on the bottom of both keypad and mounting plate.
7. Tighten the screws to fix the keypad on the mounting plate and complete the installation.

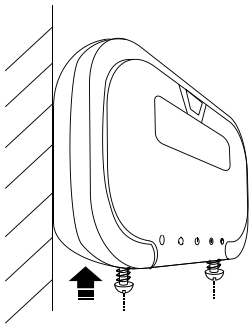

2.4 Keypad Wiring

The keypad wiring is shown as follows.

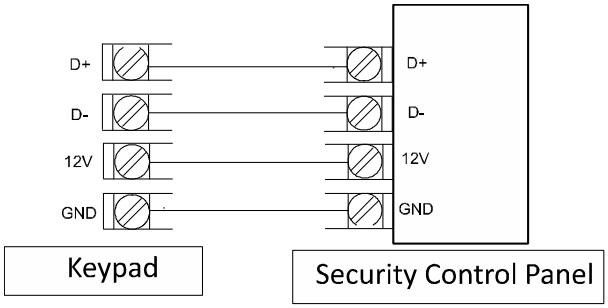

Chapter 3 Keypad Operation (Local Operation）

3.1 Keypad Alarm Operation Code

Function	Description	Command
Arming/Disarming	Normal(Away)Arming/Disarming	【Password】【#】
	Instant Arming	【Password】【*】【7】【#】
	Stay Arming	【Password】【*】【4】【#】
	Normal (Away)Arming/Disarming	【Password】【Bypass】【#】
	Mandatory	【Password】【*】【7】【Bypass】【#】
	Mandatory Instant Arming	【Password】【*】【4】【Bypass】【#】
Bypass	Bypass Zone（n）	【Password】【Bypass】【n】【n】【n】【#】 【Bypass】【n】【n】【n】【#】 nnn is the zone No.
	Group Bypass	【Password】【*】【4】【1】【#】
	Group Bypass	【Password】【*】【4】【2】【#】
Programming/ Editing Password	Control Panel Programming	【Installer Password】【*】【0】【#】
	Exit Operation	【*】【#】
	Operator Password	【Operator Password】【*】【0】【#】 【User No. (3digits)】【#】 【New Password】【#】 【New Password】【#】
Clearing Alarm	Clearing Under arming status Clearing under disarming status	【*】【1】【#】 【Password】 【*】【1】【#】
Keypad Settings	Enabling/Disabling Keypad Tone	【*】【5】【1】【#】
	Enabling/Disabling Fault Prompt	【*】【5】【6】【#】
	LCD Backlight Control	【*】【5】【2】【n】【n】【n】【#】
	LCD Backlight Disabling	【*】【8】【#】
Testing	Testing	【Password】【*】【6】【0】【#】
	Alarm Center Testing	【Password】【*】【6】【1】【#】
	Project Mode	【Password】【Project】【9】【0】【n】【#】
	Exiting Project Mode	【Project】 or 【*】【#】
Display/Output	Enabling Alarm Output	【Password】【*】【8】【5】【n】【n】【#】
	Disabling Alarm Output	【Password】【*】【8】【6】【n】【n】【#】
System Settings	Control Panel Soft Resetting	【Operator Password】【*】【6】【8】【#】
	Initialization	【Installer Password】【*】【8】【9】【#】
Panic Alarm	Panic Alarm	【Panic】

Device Status Query	System Fault Status	【Status】
Wireless User Settings	Pairing Wireless Device and Control Panel	【Password】【*】【91】【No.】【#】
	Deleting the Specified Connected Wireless Device	【Password】【*】【90】【No.】【#】
	Deleting all the Connected Wireless Device	【Password】【*】【92】【#】
Card User Settings	Pairing Card No. and Control Panel	【Operator】 【Project】【10】【User No.】 【#】
	Deleting the Specified Card	【Operator】【Project】【11】【Card No.】【#】
		【Operator】【Project】【12】【#】
	Deleting All Card Of a Specified User	【Operator】【Project】【15】【#】
	Exiting Card Pairing Mode	【*】【#】
Schedule	Resetting Current Schedule	【Installer Password】【*】【8】【1】【#】
	Clearing Weekly Schedule	【Installer Password】【*】【8】【2】【#】
	Clearing Prioritized Schedule	【Installer Password】【*】【8】【3】【#】
Single Zone Operation	Arming/Disarming	【Password】【Project】【n】【n】【n】【#】
	Clearing Alarm	【Password】【Project】【n】【n】【n】【#】
Language Settings	Displaying English	【*】【9】【1】【1】【#】
	Displaying Chinese	【*】【9】【1】【0】【#】