Network PTZ Camera

Quick Start Guide

Quick Start Guide

COPYRIGHT ©2018 Hangzhou Hikvision Digital Technology Co., Ltd.

ALL RIGHTS RESERVED.

Any and all information, including, among others, wordings, pictures, graphs are the properties of Hangzhou Hikvision Digital Technology Co., Ltd. or its subsidiaries (hereinafter referred to be “Hikvision”). This user manual (hereinafter referred to be “the Manual”) cannot be reproduced, changed, translated, or distributed, partially or wholly, by any means, without the prior written permission of Hikvision. Unless otherwise stipulated, Hikvision does not make any warranties, guarantees or representations, express or implied, regarding to the Manual.

About this Manual

This Manual is applicable to Network PTZ Camera.

The Manual includes instructions for using and managing the product. Pictures, charts, images and all other information hereinafter are for description and explanation only. The information contained in the Manual is subject to change, without notice, due to firmware updates or other reasons. Please find the latest version in the company website (http://overseas.hikvision.com/en/).

Please use this user manual under the guidance of professionals.

Trademarks Acknowledgement

HIKVISION and other Hikvision’s trademarks and logos are the properties of Hikvision in various jurisdictions. Other trademarks and logos mentioned below are the properties of their respective owners.

Legal Disclaimer

TO THE MAXIMUM EXTENT PERMITTED BY APPLICABLE LAW, THE PRODUCT DESCRIBED, WITH ITS HARDWARE, SOFTWARE AND FIRMWARE, IS PROVIDED “AS IS”, WITH ALL FAULTS AND ERRORS, AND HIKVISION MAKES NO WARRANTIES, EXPRESS OR IMPLIED, INCLUDING WITHOUT LIMITATION, MERCHANTABILITY, SATISFACTORY QUALITY, FITNESS FOR A PARTICULAR PURPOSE, AND NON-INFRINGEMENT OF THIRD PARTY. IN NO EVENT WILL HIKVISION, ITS DIRECTORS, OFFICERS, EMPLOYEES, OR AGENTS BE LIABLE TO YOU FOR ANY SPECIAL, CONSEQUENTIAL, INCIDENTAL, OR INDIRECT DAMAGES, INCLUDING, AMONG OTHERS, DAMAGES FOR LOSS OF BUSINESS PROFITS, BUSINESS INTERRUPTION, OR LOSS OF DATA OR DOCUMENTATION, IN CONNECTION WITH THE USE OF THIS PRODUCT, EVEN IF HIKVISION HAS BEEN ADVISED OF THE POSSIBILITY OF SUCH DAMAGES.

REGARDING TO THE PRODUCT WITH INTERNET ACCESS, THE USE OF PRODUCT SHALL BE WHOLLY AT YOUR OWN RISKS. HIKVISION SHALL NOT TAKE ANY RESPONSIBILITES FOR ABNORMAL OPERATION, PRIVACY LEAKAGE OR OTHER DAMAGES RESULTING FROM CYBER ATTACK, HACKER ATTACK, VIRUS INSPECTION, OR OTHER INTERNET SECURITY RISKS; HOWEVER, HIKVISION WILL PROVIDE TIMELY TECHNICAL SUPPORT IF REQUIRED.

SURVEILLANCE LAWS VARY BY JURISDICTION. PLEASE CHECK ALL RELEVANT LAWS IN YOUR JURISDICTION BEFORE USING THIS PRODUCT IN ORDER TO ENSURE THAT YOUR USE CONFORMS THE APPLICABLE LAW. HIKVISION SHALL NOT BE LIABLE IN THE EVENT THAT THIS PRODUCT IS USED WITH ILLEGITIMATE PURPOSES.

IN THE EVENT OF ANY CONFLICTS BETWEEN THIS MANUAL AND THE APPLICABLE LAW, THE LATER PREVAILS.

0505171080913

Regulatory Information

FCC Information

Please take attention that changes or modification not expressly approved by the party responsible for compliance could void the user's authority to operate the equipment.

FCC compliance: This equipment has been tested and found to comply with the limits for a Class B digital device, pursuant to part 15 of the FCC Rules. These limits are designed to provide reasonable protection against harmful interference when the equipment is operated in a commercial environment. This equipment generates, uses, and can radiate radio frequency energy and, if not installed and used in accordance with the instruction manual, may cause harmful interference to radio communications. Operation of this equipment in a residential area is likely to cause harmful interference in which case the user will be required to correct the interference at his own expense.

FCC Conditions

This device complies with part 15 of the FCC Rules. Operation is subject to the following two conditions:

1. This device may not cause harmful interference.

2. This device must accept any interference received, including interference that may cause undesired operation.

This equipment complies with FCC/IC RSS-102 radiation exposure limits set forth for an uncontrolled environment. This equipment should be installed and operated with minimum distance 20cm between the radiator & your body.

EU Conformity Statement

This product and - if applicable - the supplied accessories too are marked with "CE" and comply therefore with the applicable harmonized European standards listed under the Low Voltage Directive 2015/35/EU, the EMC Directive 2014/30/EU, the RoHS Directive 2011/65/EU.

2012/19/EU (WEEE directive): Products marked with this symbol cannot be disposed of as unsorted municipal waste in the European Union. For proper recycling, return this product to your local supplier upon the purchase of equivalent new equipment, or dispose of it at designated collection points. For more information, please see: www.recyclethis.info.

2006/66/EC (battery directive): This product contains a battery that cannot be disposed of as unsorted municipal waste in the European Union. See the product documentation for specific battery information. The battery is marked with this symbol, which may include lettering to indicate cadmium (Cd), lead (Pb), or mercury (Hg). For proper recycling, return the battery to your supplier or to a designated collection point. For more information, please see: www.recyclethis.info.

Industry Canada ICES-003 Compliance

This device meets the CAN ICES-3 (A)/NMB-3(A) standards requirements.

Safety Instruction

These instructions are intended to ensure that user can use the product correctly to avoid danger or property loss.

The precaution measure is divided into “Warnings” and “Cautions”

Warnings: Serious injury or death may occur if any of the warnings are neglected.

Cautions: Injury or equipment damage may occur if any of the cautions are neglected.

Warnings Follow these safeguards to prevent serious injury or death.	**Cautions** Follow these precautions to prevent potential injury or material damage.

Warnings

- In the use of the product, you must be in strict compliance with the electrical safety regulations of the nation and region.
- Refer to technical specifications for detailed information.
- Input voltage should meet both the SELV (Safety Extra Low Voltage) and the Limited Power Source with 24 VAC or 12 VDC according to the IEC60950-1 standard. Refer to technical specifications for detailed information.

- Do not connect several devices to one power adapter as adapter overload may cause over-heating or a fire hazard.
- Make sure that the plug is firmly connected to the power socket.
- Make sure that the power has been disconnected before you wire, install or dismantle the PTZ camera.
- When the product is mounted on wall or ceiling, the device shall be firmly fixed.
- If smoke, odor or noise rise from the device, turn off the power at once and unplug the power cable, and then contact the service center.
- If the product does not work properly, contact your dealer or the nearest service center. Never attempt to disassemble the camera yourself. (We shall not assume any responsibility for problems caused by unauthorized repair or maintenance.)

Cautions

- If the camera fails to synchronize local time with that of the network, you need to set up camera time manually. Visit the camera (via web browser or client software) and enter system settings interface for time settings.
- Make sure the power supply voltage is correct before using the camera.
- Do not drop the camera or subject it to physical shock, and do not expose it to high electromagnetism radiation. Avoid installation on vibrations surface or places subject to shock (ignorance can cause device damage).

- Do not touch senor modules with fingers. If cleaning is necessary, use clean cloth with a bit of ethanol and wipe it gently. If the camera will not be used for an extended period, replace the lens cap to protect the sensor from dirt.
- Do not aim the camera at the sun or extra bright places. Blooming or smearing may occur otherwise (which is not a malfunction), and affect the endurance of sensor at the same time.
- The sensor may be burned out by a laser beam, so when any laser equipment is in using, make sure that the surface of sensor will not be exposed to the laser beam.
- Do not place the camera in extremely hot, cold, dusty or damp locations, and do not expose it to high electromagnetic radiation.
- To avoid heat accumulation, good ventilation is required for operating environment.
- Keep the camera away from liquid while in use.
- While in delivery, the camera shall be packed in its original packing, or packing of the same texture.
- Improper use or replacement of the battery may result in hazard of explosion. Replace with the same or equivalent type only. Dispose of used batteries according to the instructions provided by the battery manufacturer.

Table of Contents

1 Overview.....1
1.1 Introduction 1
1.2 Cable Descriptions 1
1.3 Alarm Output 2
2 Installation 4
2.1 Installing the Memory Card 4
2.1.1 DE1Axxx(I) Series PTZ Camera..... 4
2.1.2 DE2Axxx(I) Series PTZ Camera..... 8
2.1.3 DE2xxx(I) Series PTZ Camera 8
2.1.4 DE3xxx Series PTZ Camera..... 9
2.1.5 DY3xxx Series PTZ Bullet Camera 10
2.1.6 DE4AxxxI Series PTZ Camera 10
2.2 Installing DE1Axxx(I) Series PTZ Camera 12
2.2.1 Ceiling Mounting..... 14
2.2.2 Wall Mounting..... 16
2.3 Installing DE2Axxx(I) Series PTZ Camera 18
2.4 Installing DE2xxx(I) Series PTZ Camera..... 18
2.4.1 Wall Mounting..... 19
2.4.2 Ceiling Mounting..... 23
2.4.3 Installing with Junction Box..... 28
2.5 Installing DE3xxx Series PTZ Camera 31
2.5.1 Ceiling Mounting..... 31
2.5.2 In-ceiling Mounting..... 33
2.6 Installing DY3xxx Series PTZ Bullet Camera 36
2.6.1 Dimensions of DY3xxx Series PTZ Bullet Camera 36
2.6.2 Wall Mounting..... 38
2.6.3 Base Mounting 39

2.7 Installing DE4AxxxI Series PTZ Camera 40
2.7.1 Ceiling Mounting 41
2.7.2 In-ceiling Mounting 41
3 Setting the PTZ Camera over the LAN 44
3.1 Wiring 54
3.2 Activating the Camera 55
3.2.1 Activation via Web Browser 55
3.2.2 Activation via SADP Software 57
3.3 Modifying the IP Address 58
4 Accessing via Web Browser 61
5 Operating via Hik-Connect App 64
5.1 Enable Hik-Connect Service on Camera 64
5.1.1 Enable Hik-Connect Service via SADP Software 64
5.1.2 Enable Hik-Connect Service via Web Browser 65
5.2 Hik-Connect Setup 67
5.3 Adding Camera to Hik-Connect 67
5.4 Initializing the Memory Card 69

1 Overview

1.1 Introduction

The network PTZ camera has the following series:

- DE1Axxx(I) Series PTZ Camera
- DE2Axxx(I) Series PTZ Camera
- DE2xxx(I) Series PTZ Camera
- DE3xxx Series PTZ Camera
- DY3xxx Series PTZ Bullet Camera
- DE4AxxxI Series PTZ Camera

Integrated with an optical zoom lens, this series of cameras feature in the PTZ limits, 3D positioning, Day/Night auto switch, 3D DNR, etc., and are widely applied in various kinds of environments.

1.2 Cable Descriptions

The cable interfaces of network PTZ camera are shown in Figure 1-1. The cables are distinguished by different colors. Refer to the labels attached on the cables for identification.

Notes:

- The cables vary depending on different camera models.
- Make sure the camera is power-off before you connect the cables.

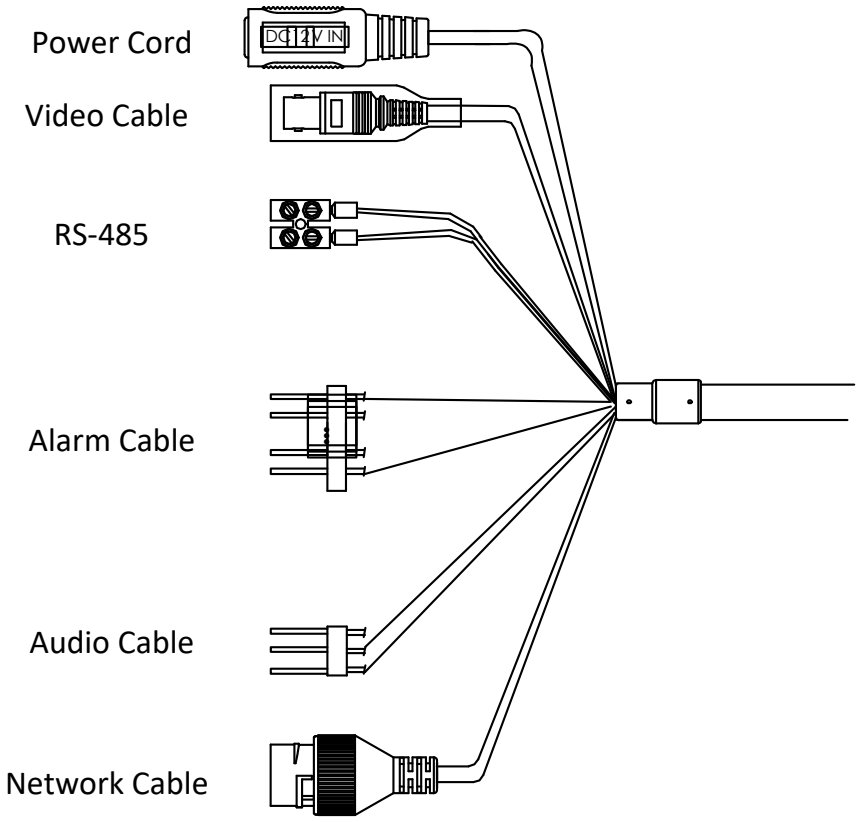

Figure 1-1 Cables of PTZ Camera

- Power Cord: Supports 12 VDC power supply.
- Video Cable: Connect BNC Cable to test the video output.
- Alarm Cable: Connect terminal ALARM-IN with GND interface, and connect terminal ALARM-OUT with ALARM-COM interface.
- Audio Cable: Connect terminal AUDIO-IN with GND interface.
- Network Cable: Connect the network interface with network cable.

1.3 Alarm Output

Alarm output is shown in Figure 1-2.

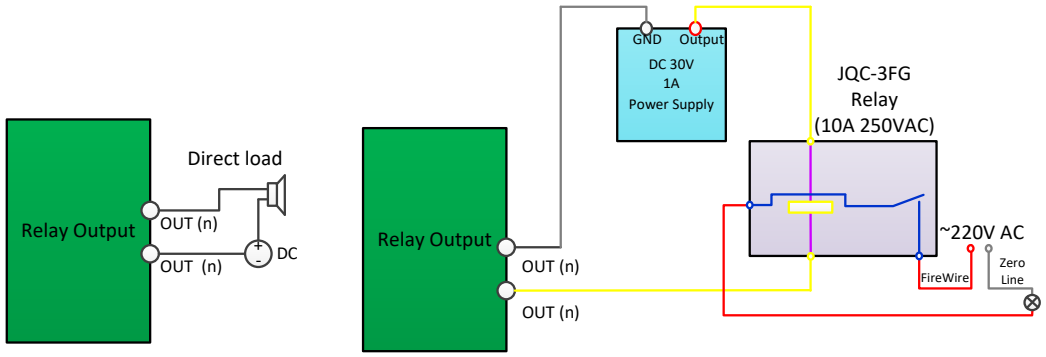

Figure 1-2 Alarm Output

2 Installation

Before you start:

Check the package contents and make sure that the device in the package is in good condition and all the assembly parts are included.

Notes:

- Do not drag the PTZ camera with its waterproof cables; otherwise the waterproof performance is affected.
- Do not touch the bubble directly by hand. The image blurs otherwise.
- Do not power up the camera until the installation is finished. To ensure the safety of personnel and equipment, all the installation steps should be done with power supply off.

2.1 Installing the Memory Card

You can install the memory card for local storage.

2.1.1 DE1Axxx(I) Series PTZ Camera

Steps:

1. Open the cover with the straight screwdriver from a crack on the cover, as shown in Figure 2-1.

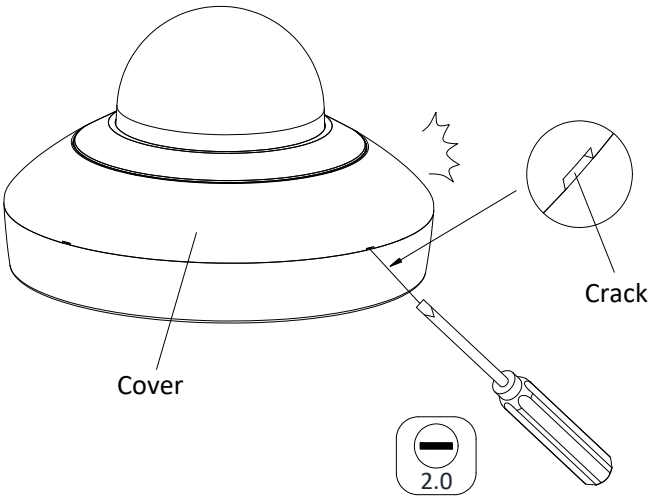

Figure 2-1 Open the Cover

2. Unscrew the screws on the camera base with the cross screwdriver, and remove the bubble, as shown in Figure 2-2.

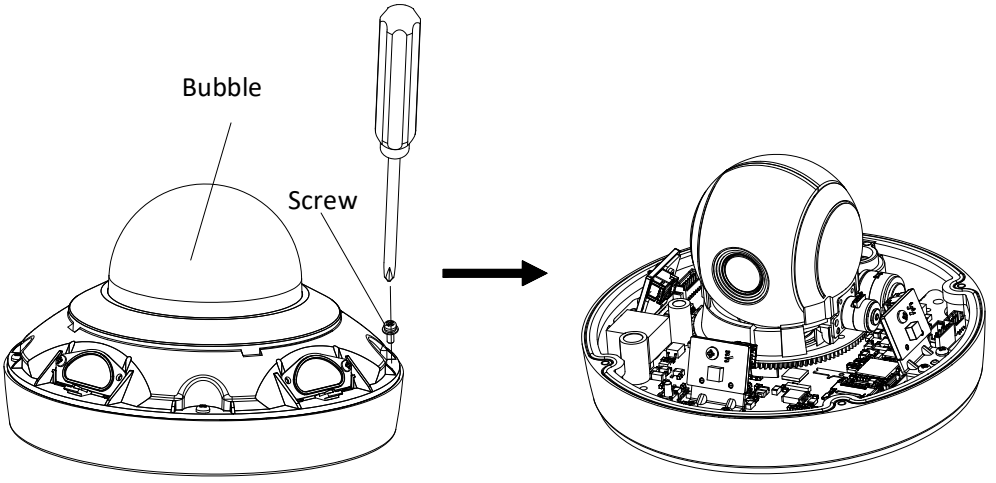

Figure 2-2 Remove the Bubble

3. The position of memory card are various according to different camera model.

   Type I: open the memory card slot in the camera, and insert the memory card.

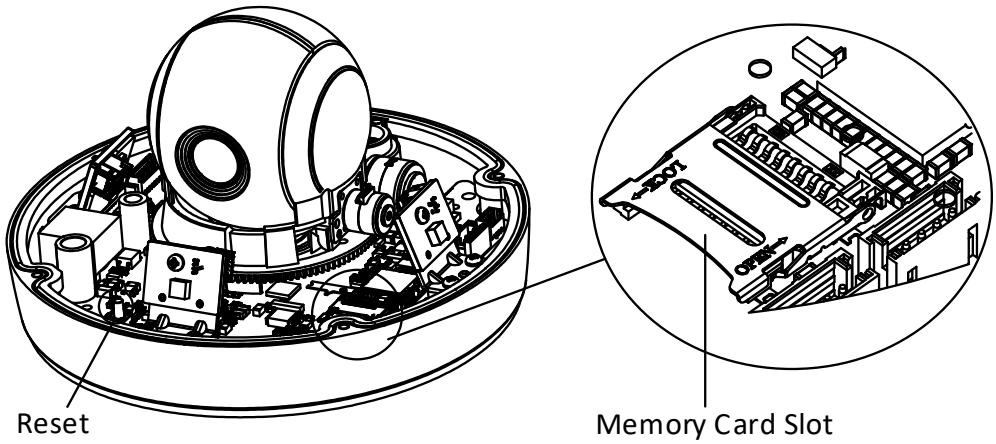

Figure 2-3 Insert the Memory Card

Type II: align the memory card with the memory card slot and insert it.

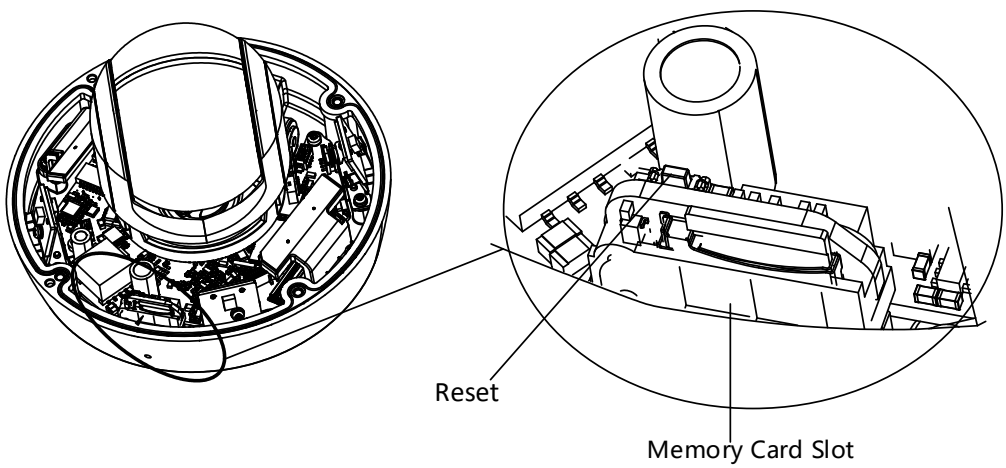

Figure 2-4 Insert the Memory Card

4. Align the bubble with the camera base, and install the bubble back. Fix the bubble with four screws, as shown in Figure 2-5.

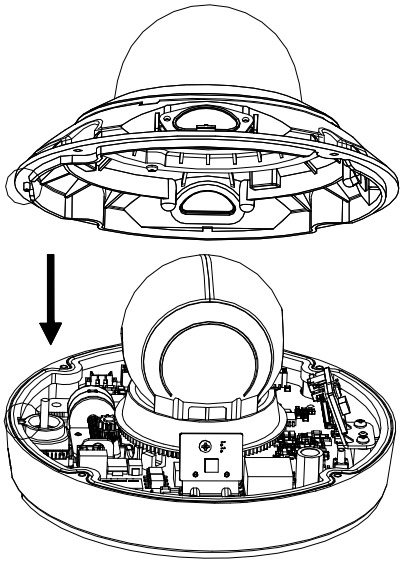

Figure 2-5 Install the Bubble

5. Align the cover with the camera, and install the cover back, as shown in Figure 2-6.

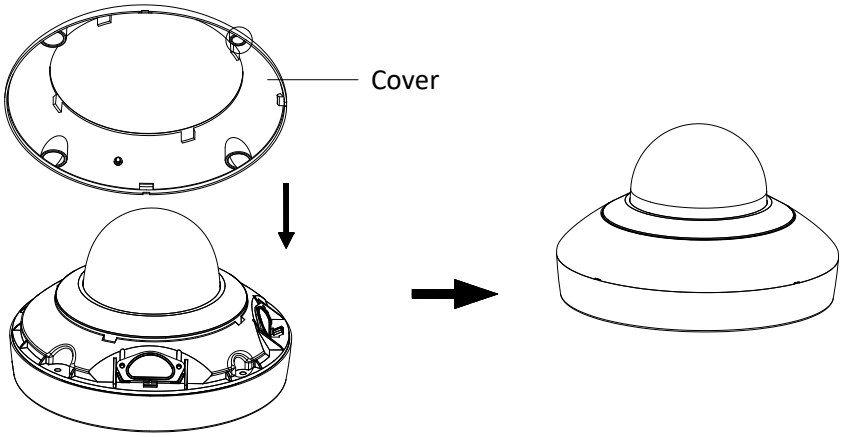

Figure 2-6 Install the Cover

2.1.2 DE2Axxx(I) Series PTZ Camera

Note:

The installation steps are similar to the installation steps of DE1Axxx(I) series camera. Refer to section ***2.1.1 DE1Axxx(I) Series PTZ Camera***.

2.1.3 DE2xxx(I) Series PTZ Camera

Steps:

1. Open the memory card cover.

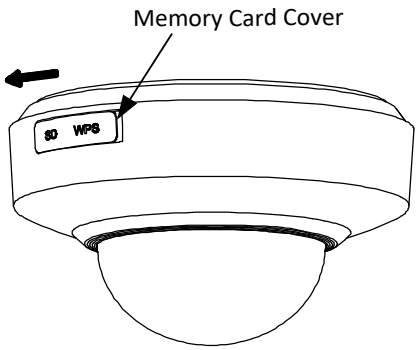

Figure 2-7 DE2xxx Series PTZ Camera

Figure 2-8 DE2xxxI Series (IR) PTZ Camera

2. Rotate the cover to a proper position, align the memory card with the memory card slot and insert it.

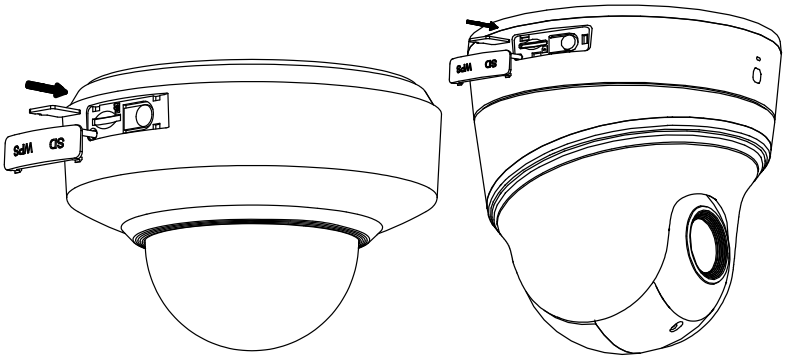

Figure 2-9 Insert the Memory Card

3. Rotate the cover and push it back.

2.1.4 DE3xxx Series PTZ Camera

Steps:

1. Loosen three screws on the bottom of camera to reveal the memory card slot, as shown in Figure 2-10.

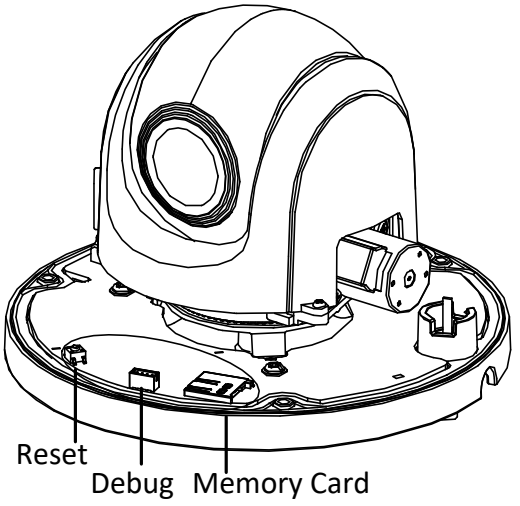

Figure 2-10 DE3xxx Series PTZ Camera

2. Align the memory card with the memory card slot and insert it.
3. Fix the screws and assemble the PTZ camera.

2.1.5 DY3xxx Series PTZ Bullet Camera

For DY3xxx series PTZ bullet camera, the memory card slot is in the camera module and if you need, the memory card can be installed before the camera leaves the factory. In order to prevent damage, we highly recommend that you do not disassemble the PTZ bullet camera by yourself.

2.1.6 DE4AxxxI Series PTZ Camera

Steps:

1. Remove the four silicone plugs on the decorative rim as shown in Figure 2-11, and you can see four flange screws in the decorative rim.

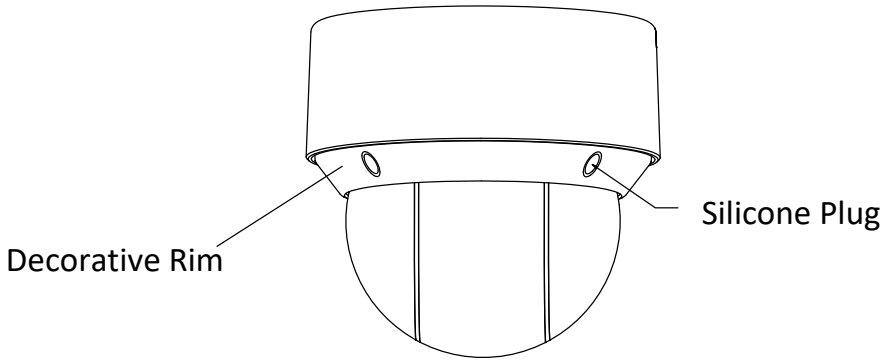

Figure 2-11 Remove the Silicone Plugs

2. Loosen four flange screws with a screwdriver. Remove the bubble and the decorative rim as shown in Figure 2-12.

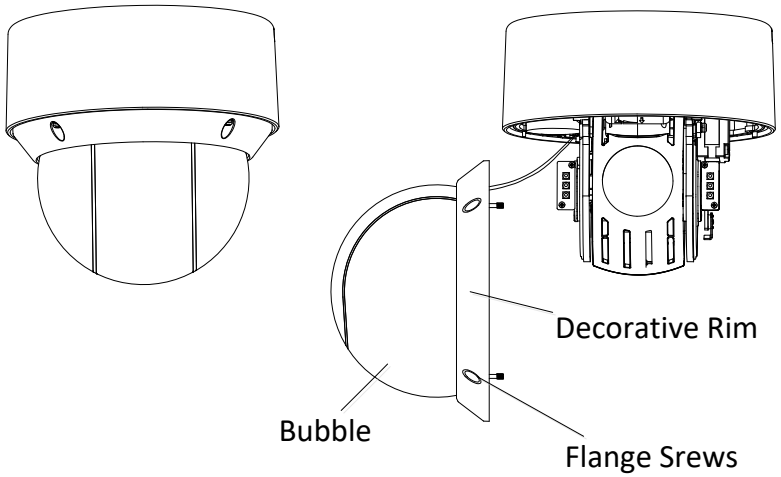

Figure 2-12 Remove the Bubble and the Decorative Rim

3. Open the memory card cover and insert the memory card into the card slot as shown in Figure 2-13 and Figure 2-14.

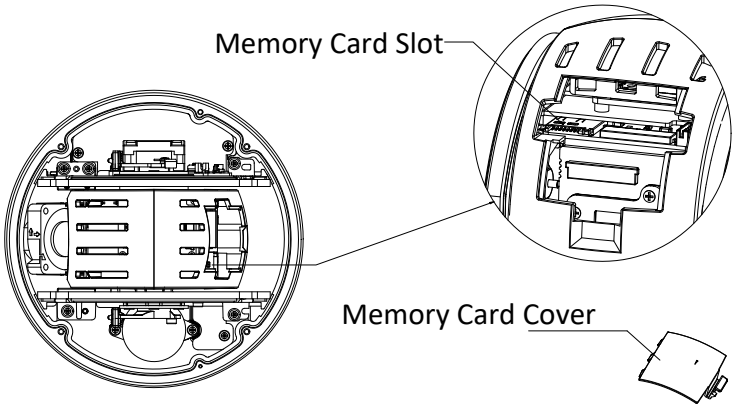

Figure 2-13 For 20× Camera Module

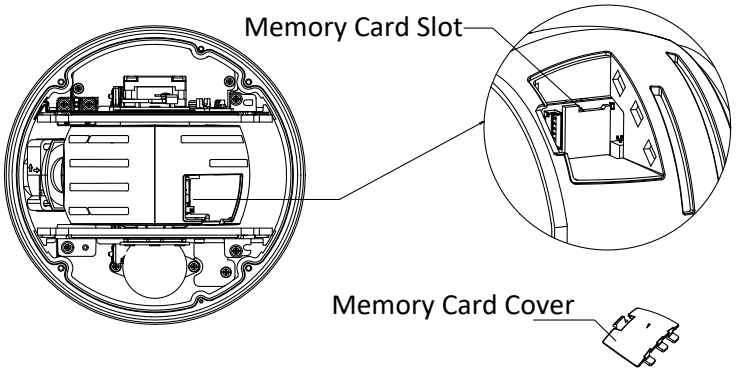

Figure 2-14 For 4× Camera Module

4. Close the memory card cover. Fix the four flange screws and push four silicone plugs back to assemble the PTZ camera.

2.1.7 DE3Axxxl Series PTZ Camera

Steps:

1. Pull the decorative cover out and loosen 2 screws on memory card cover with screwdriver as shown in Figure 2-15.

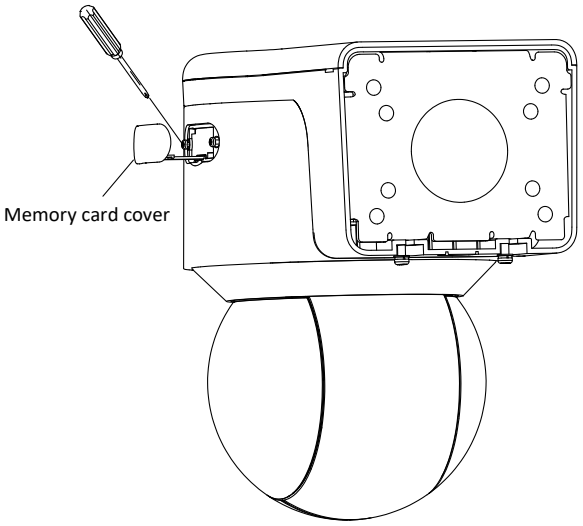

Figure 2-15 Open the memory card cover

2. Remove the memory card cover, including sealing ring, and insert the memory card as printed mark.

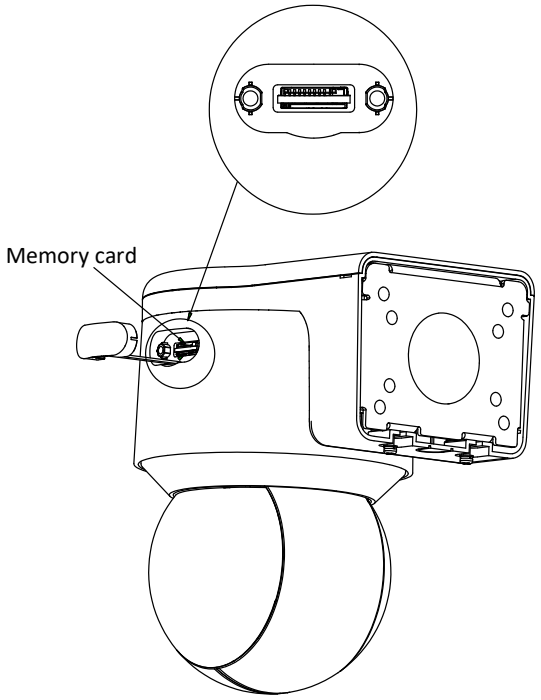

Figure 2-16 Insert the memory card

3. Screw the memory cover back, making sure the sealing ring is flat, and then close the decorative cover.

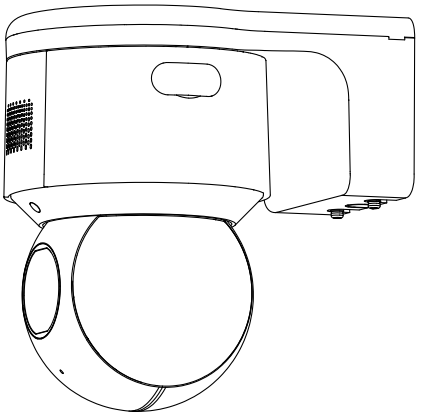

Figure 2-17 Complete the memory card installation

2.2 Installing DE1Axxx(I) Series PTZ Camera

2.2.1 Ceiling Mounting

Notes:

- The thickness of the ceiling shall range from 5 mm to 40 mm.
- Make sure the ceiling is strong enough to withstand more than four times the weight of the PTZ camera and its accessories.

Steps:

1. Rotate the installation plate anticlockwise, and remove the installation plate, as shown in Figure 2-15.

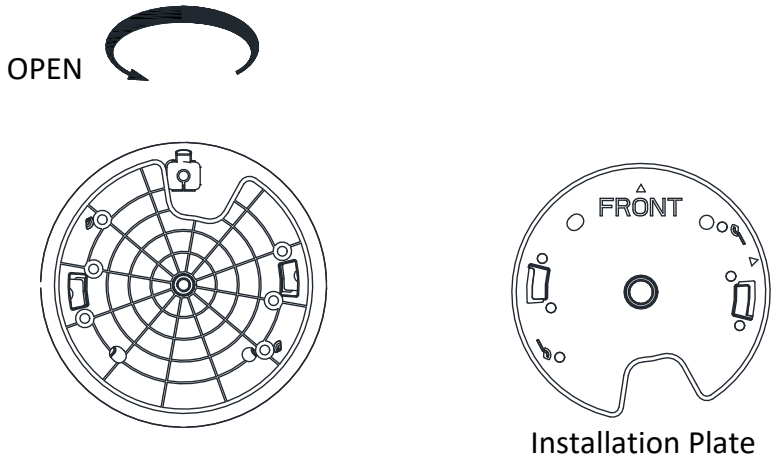

Figure 2-18 Remove the Installation Plate

2. Drill four screw holes in the ceiling according to the installation plate.
3. Align the installation plate with the screw holes, and fix the installation plate on the ceiling.

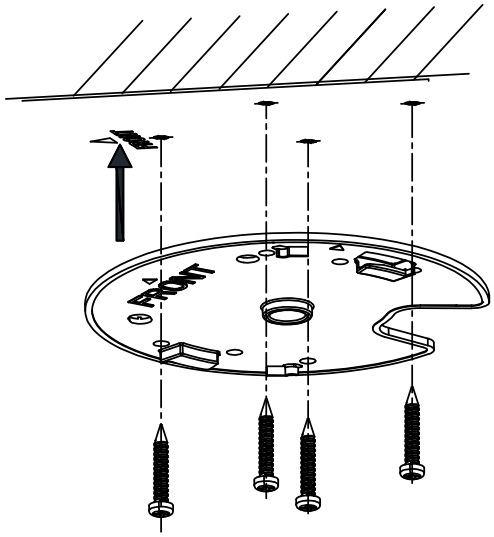

Figure 2-19 Fix the Installation Plate

4. Route the cables from the cable hole in the installation plate.

Note:

Water-proof treatment is required for cable connectors. Refer to section 2.9 and 2.10 for details.

5. Align the camera with the installation plate, and rotate the camera clockwise to fix it, as shown in Figure 2-17.

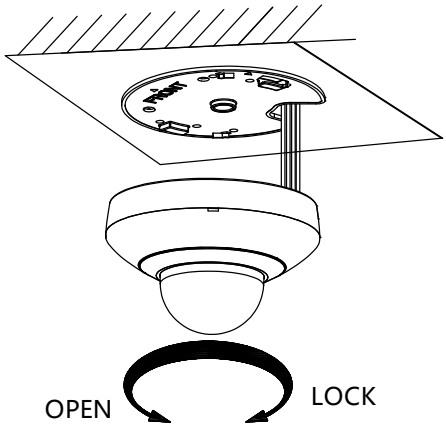

Figure 2-20 Fix the Camera

2.2.2 Wall Mounting

Notes:

- For cement wall, you need to use the expansion screw to fix the bracket. The mounting hole of the expansion pipe on the wall should align with the mounting hole on the bracket.
- For wooden wall, you can just use the self-tapping screw to fix the bracket.
- Make sure that the wall is strong enough to withstand more than eight times the weight of the PTZ camera and its accessories.

Steps:

1. Remove the installation plate, and install it on the wall mounting bracket (not supplied) with two screws.

   Note:

   Refer to step 1 in section ***2.2.1 Ceiling Mounting*** to remove the installation plate.

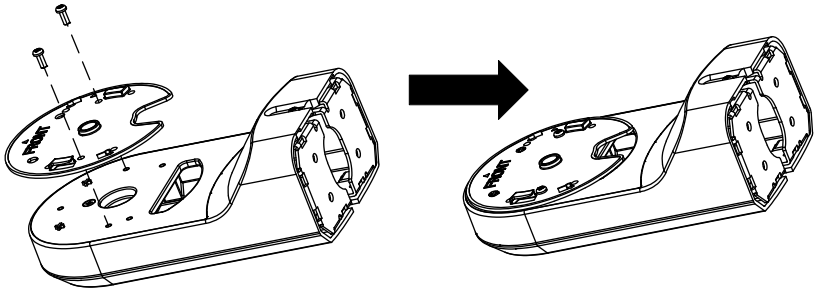

Figure 2-21 Install the Installation Plate

2. Loosen the fixing screw on the bracket and remove the bracket base.

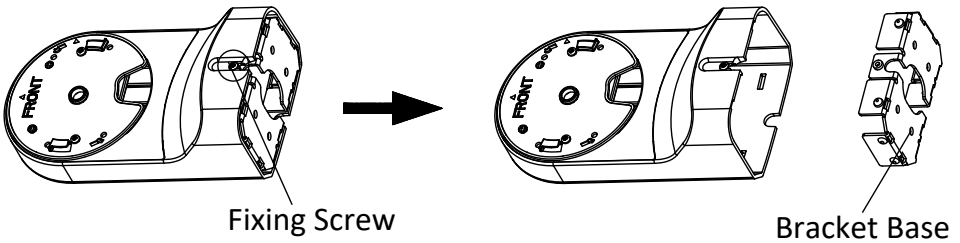

Figure 2-22 Remove the Bracket Base

3. Install the bracket base on the wall with four screws.

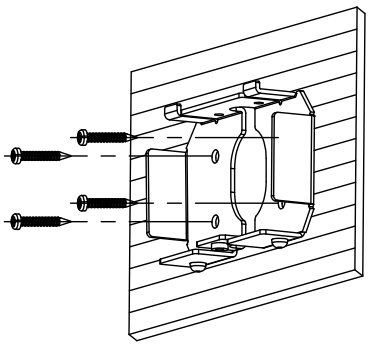

Figure 2-23 Install the Bracket Base

4. Route the cables. Align the camera with the installation plate on the wall mounting bracket, and rotate the camera clockwise to fix it on the bracket.

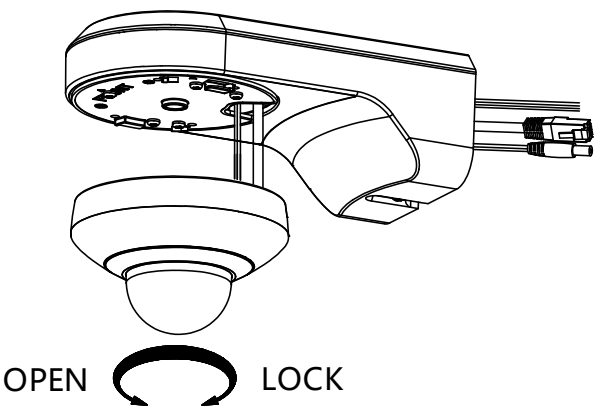

Figure 2-24 Install the Camera

5. Connect the cables. Install the wall mounting bracket to the bracket base on the wall, and fix it with the supplied screw.

Note:

Water-proof treatment is required for cable connectors. Refer to section 2.9 and 2.10 for details.

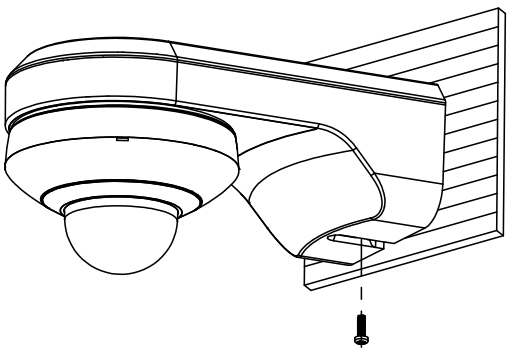

Figure 2-25 Fix the Bracket

6. Remove the protective film after installation.

2.3 Installing DE2Axxx(I) Series PTZ Camera

Note:

The installation steps are similar to the installation steps of DE1Axxx(I) series camera. Refer to section ***2.2 Installing DE1Axxx(I) Series PTZ Camera***.

2.4 Installing DE2xxx(I) Series PTZ Camera

DE2xxx series PTZ camera supports wall mounting, ceiling mounting, and installing with junction box. DE2xxxI Series (IR) PTZ camera supports wall mounting and ceiling mounting.

2.4.1 Wall Mounting

Notes:

- For cement wall, you need to use the expansion screw to fix the bracket. The mounting hole of the expansion pipe on the wall should align with the mounting hole on the bracket.
- For wooden wall, you can just use the self-tapping screw to fix the bracket.
- Make sure that the wall is strong enough to withstand more than eight times the weight of the PTZ camera and its accessories.

Steps:

1. Rotate the base plate counterclockwise to separate it from the PTZ camera.

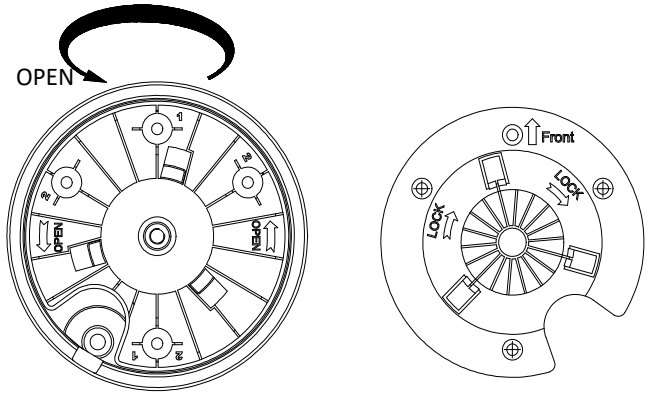

Base Plate on the Bottom of the Dome　　Front View of Base Plate

Figure 2-26 Base Plate for DE2xxx Series PTZ Camera

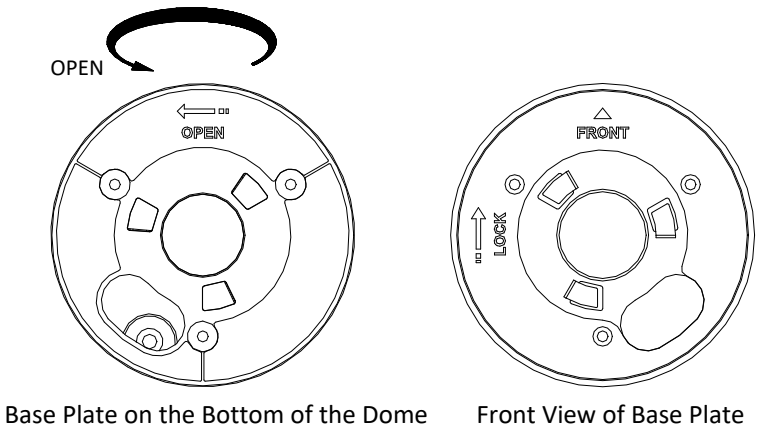

Figure 2-27 Base Plate for DE2xxxI Series (IR) PTZ Camera

2. Align the cable hole on the base plate with the hole on the bracket for wiring. And install the base plate to the bracket by fixing three PM4×10 screws (supplied) to the holes marked with digit “2” on the bracket.

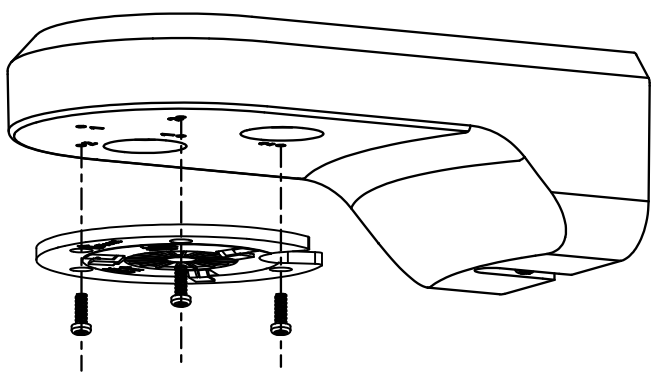

Figure 2-28 For DE2xxx Series PTZ Camera

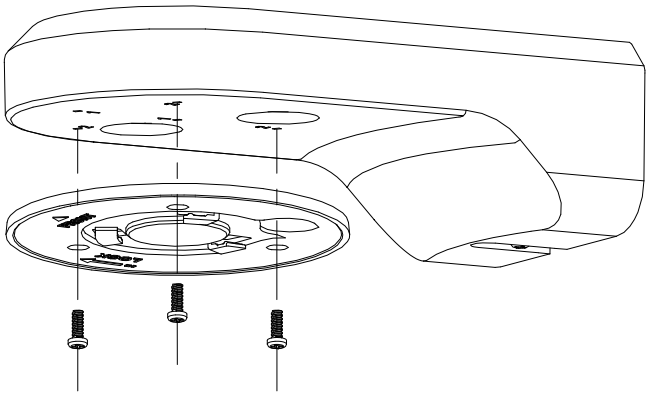

Figure 2-29 For DE2xxxI Series (IR) PTZ Camera

3. Route the cables through the cable hole.
4. Align the PTZ camera with the base plate. Rotate the PTZ camera clockwise to the base plate, and the PTZ camera is secured with the base plate by three locks on the plate.

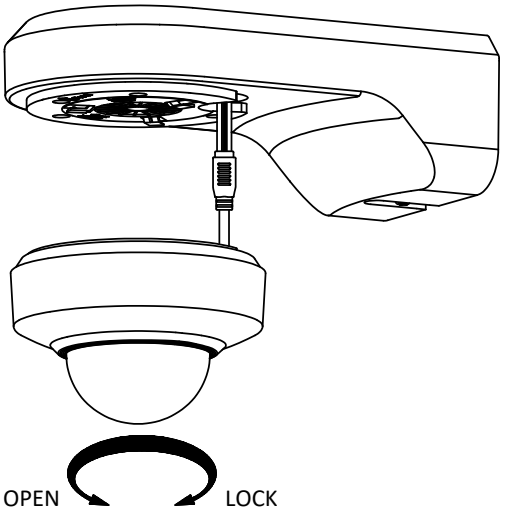

Figure 2-30 Secure DE2xxx Series PTZ Camera

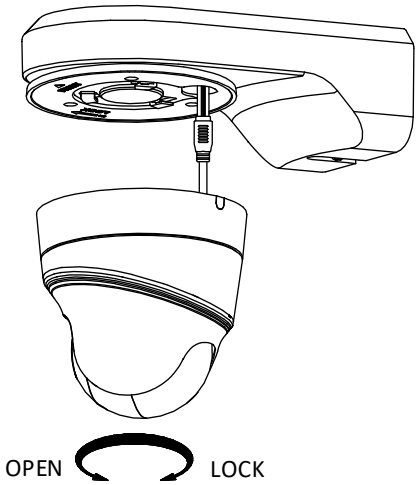

Figure 2-31 Secure DE2xxxI Series (IR) PTZ Camera

5. Secure the mounting base to the wall with four PA4×25 screws (supplied).

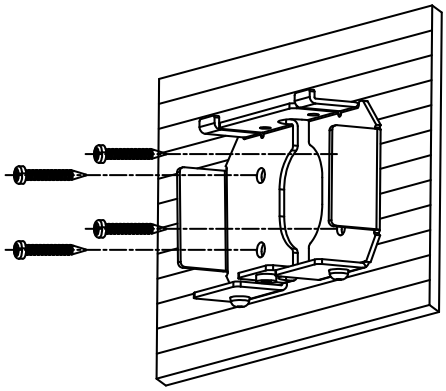

Figure 2-32 Install the Mounting Base

6. Install the PTZ camera to the bracket.
   1). Route the cables of the PTZ camera through the wall bracket.
   2). Connect the corresponding cables.
   3). Hang the bracket together with the PTZ camera on the mounting base.
   4). Fix the mounting base with a PM4×10 screw.

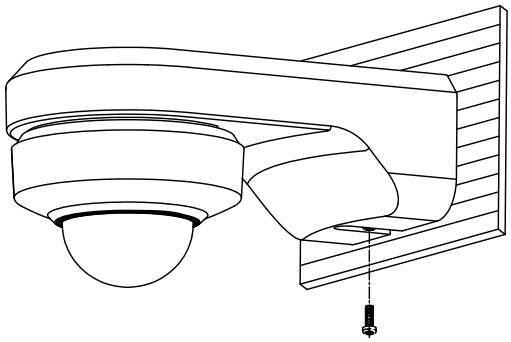

Figure 2-33 Secure the Mounting Base

Note:

Water-proof treatment is required for cable connectors. Refer to section 2.9 and 2.10 for details.

2.4.2 Ceiling Mounting

Purpose:

There are two ceiling mounting types provided for the camera, and we take the mounting without the junction box as the example.

Notes:

- The ceiling mounting is applicable to the indoor/outdoor solid ceiling construction. The followings are the mandatory precondition for ceiling mounting:
- The thickness of the ceiling shall range from 5 mm to 40 mm.
- Make sure the ceiling is strong enough to withstand more than four times the weight of the PTZ camera and its accessories.

Wiring

The cables of PTZ camera can be routed either from the top or the side of the back box, as shown in Figure 2-31 and Figure 2-32.

For the cables routed from the top of the back box, it is required to drill a cable hole in the ceiling.

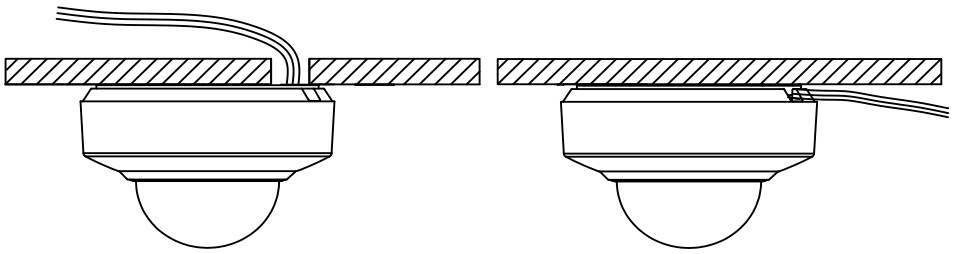

Figure 2-34 Cabling for DE2xxx Series PTZ Camera

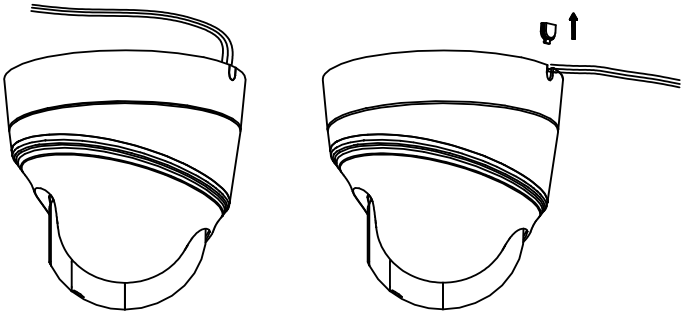

Figure 2-35 Cabling for DE2xxxI Series (IR) PTZ Camera

Note:

Water-proof treatment is required for cable connectors. Refer to section 2.9 and 2.10 for details.

Ceiling Mounting without Junction Box

Steps:

1. Rotate the base plate counterclockwise to separate it from the PTZ camera, as shown in Figure 2-23 and Figure 2-24.
2. Attach the drill template (supplied) to the place where you want to fix the PTZ camera, and make sure the front arrow appoints to the monitoring area.

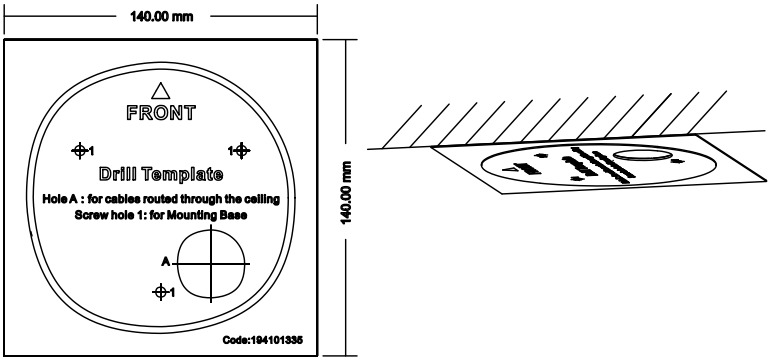

Figure 2-36 Attach the Drill Template

3. Drill a cable hole in the ceiling according to the circle A on the template if you want to route the cables through the ceiling. Pull out the cable slot cover if you want to route the cables on the surface of the ceiling, as shown in Figure 2-34.

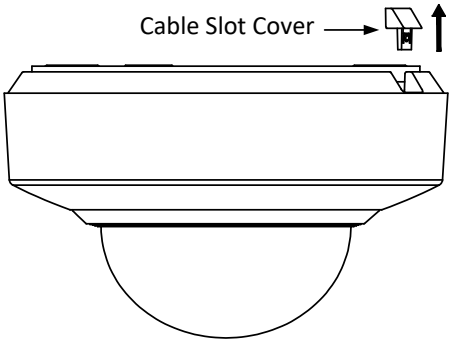

Figure 2-37 For DE2xxx Series PTZ Camera

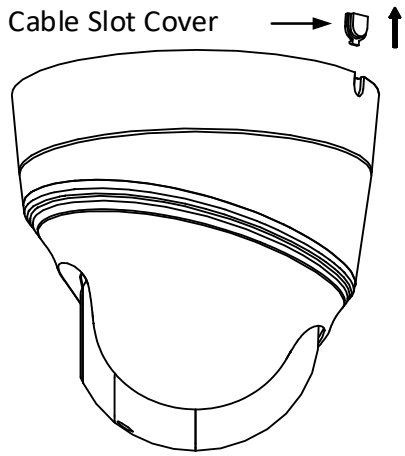

Figure 2-38 For DE2xxxI Series (IR) PTZ Camera

4. Attach the base plate to the ceiling and secure it with the supplied three self-tapping screws by aligning with three screw holes in the ceiling, and the front arrows on the drill template and base plate should be aligned together as well, as shown in Figure 2-36 and Figure 2-37.

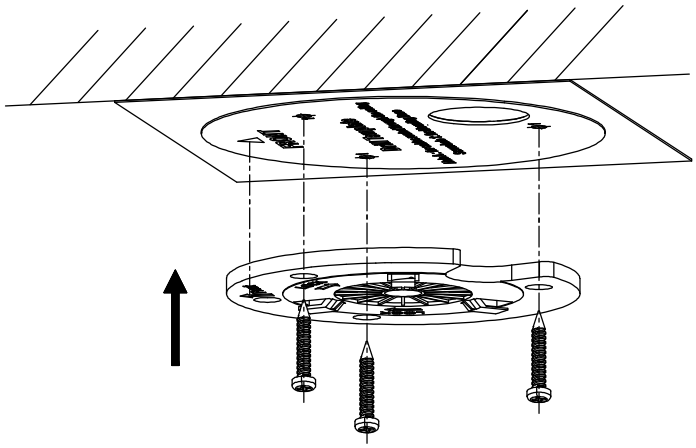

Figure 2-39 For DE2xxx Series PTZ Camera

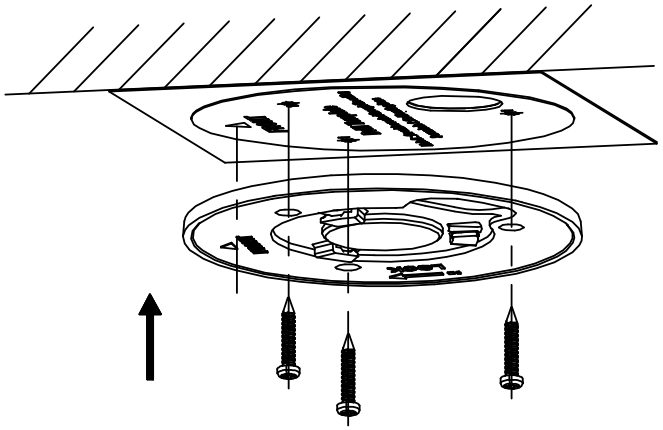

Figure 2-40 For DE2xxxI Series (IR) PTZ Camera

5. Route the cables through the cable hole.
6. Align the PTZ camera with the base plate. Rotate the PTZ camera clockwise into the base plate, and the PTZ camera is secured with the base plate by three locks on the plate.

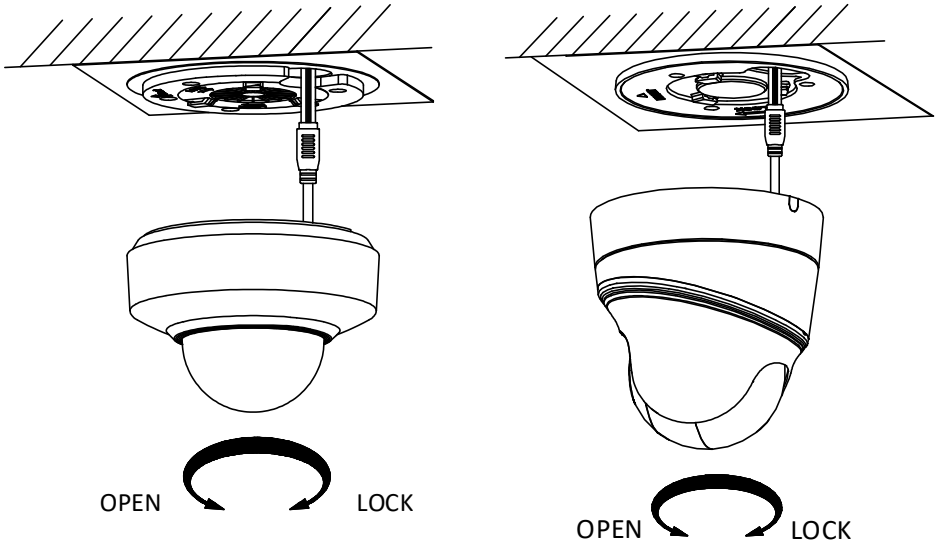

Figure 2-41 Secure the PTZ Camera

2.4.3 Installing with Junction Box

Notes:

- The thickness of the ceiling shall range from 5 mm to 40 mm.
- Make sure the ceiling is strong enough to withstand more than four times the weight of the PTZ camera and its accessories.

Steps:

1. Rotate the base plate counterclockwise to separate it from the PTZ camera.

   Notes:

   - The base plate is not required when you install the PTZ camera with junction box. Keep it properly.
   - The junction box is the optional accessory. Get it prepared before installation.

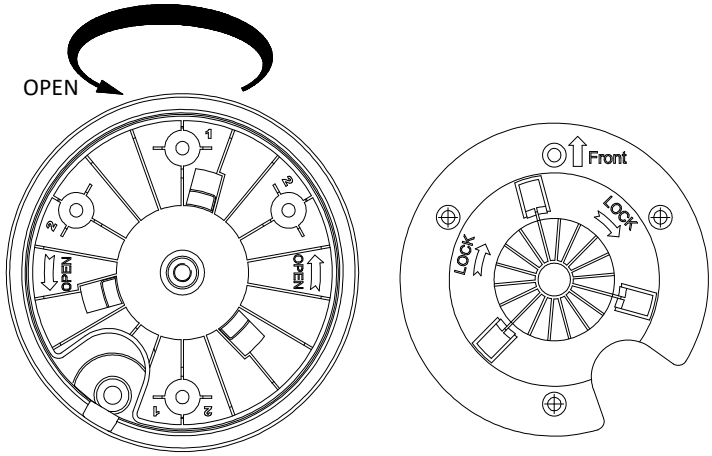

Base Plate on the Bottom of the Dome　　Front View of Base Plate

Figure 2-42 For DE2xxx Series PTZ Camera

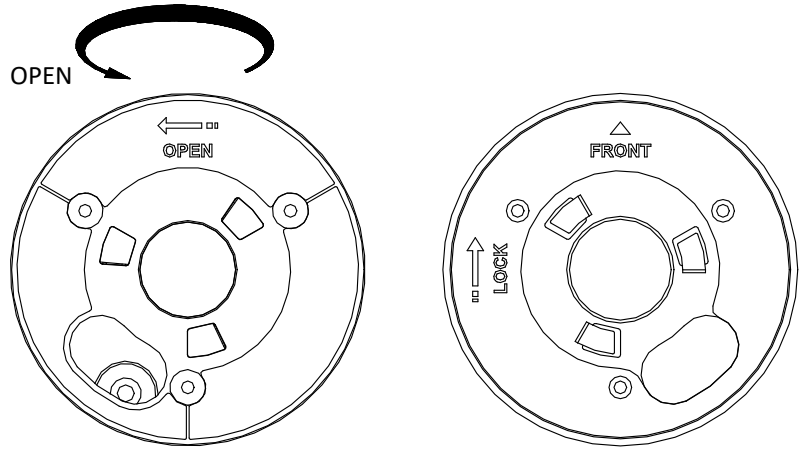

Base Plate on the Bottom of the Dome　　Front View of Base Plate

Figure 2-43 For DE2xxxI Series (IR) PTZ Camera

2. Attach the drill template (supplied) to the place where you want to fix the PTZ camera, and make sure the front arrow appoints to the monitoring area.
3. Insert two PM4×10 screws into the ceiling, as shown in Figure 2-41.

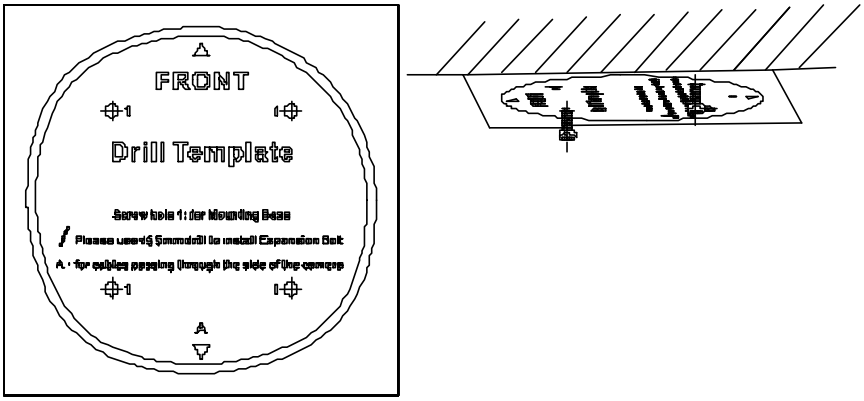

Figure 2-44 Attach the Drill Template

4. Attach the junction box to the ceiling and secure it by aligning the holes with two screws and rotating the junction box according to the direction as shown in Figure 2-42. Make sure the front arrows

on the drill template and junction box should be aligned together as well.

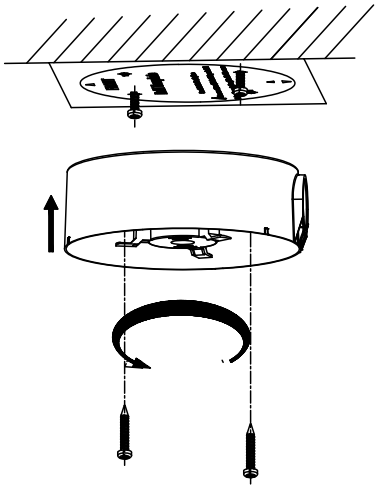

Figure 2-45 Fix the Junction Box

5. Connect the cables and route the cables clockwise through the hooks and fix the camera and the junction box with three hooks. Tighten it clockwise and loosen it anticlockwise.

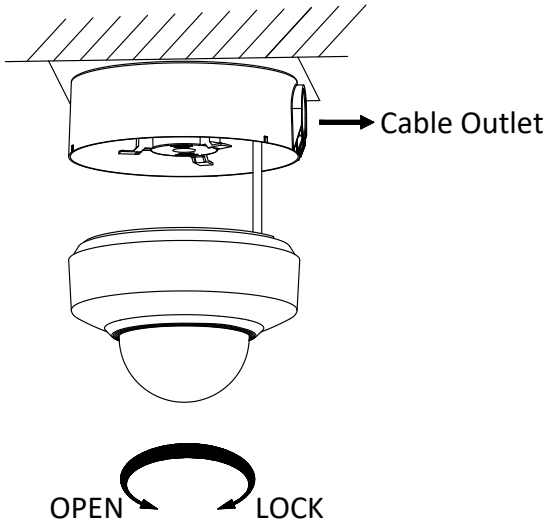

Figure 2-46 Fix the Camera

6. Secure the PTZ camera and remove the protective film.

2.5 Installing DE3xxx Series PTZ Camera

DE3xxx series PTZ camera supports ceiling mounting and in-ceiling mounting.

Note:

Wall mounting, installation with junction box, and installation with tripod are supported for DE3xxx series PTZ camera. The corresponding accessories shall be purchased separately.

2.5.1 Ceiling Mounting

Notes:

- The thickness of the ceiling shall range from 5 mm to 40 mm.
- Make sure the ceiling is strong enough to withstand more than four times the weight of the PTZ camera and its accessories.

Steps:

1. Attach the drill template (supplied) to the place where you want to fix the PTZ camera, and make sure the front arrow appoints to the monitoring area.
2. Drill a cable hole in the ceiling according to the circle A on the template if you want to route the cables through the ceiling, as shown in Figure 2-44.

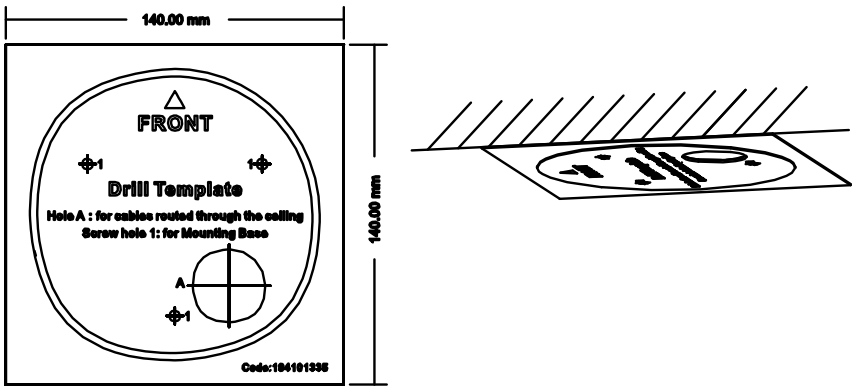

Figure 2-47 Attach the Drill Template

3. Insert the expansion screws into the ceiling. (Optional)
4. Insert four PM4×10 screws into the ceiling and fix the base plate, as shown in Figure 2-45. Make sure the FRONT arrow of the base plate is of the same direction as the arrow of the drill template.

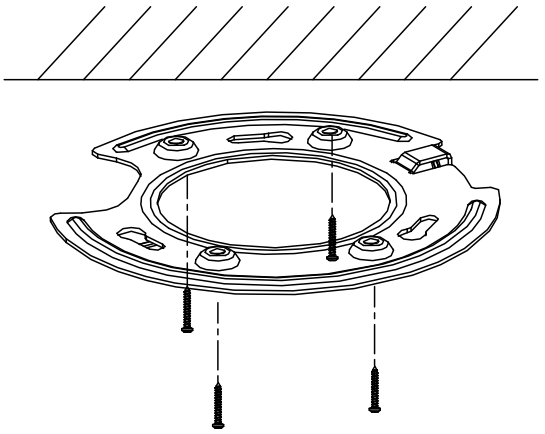

Figure 2-48 Fix the Base Plate

5. Connect the cables and route the cable through the cable outlet. Align the PTZ camera with the base plate. Rotate the PTZ camera

clockwise into the base plate, and the PTZ camera is secured with the base plate by three locks on the plate.

Note:

Water-proof treatment is required for cable connectors. Refer to section 2.9 and 2.10 for details.

6. Fix the screws on the side with a screwdriver, as shown in Figure 2-46.

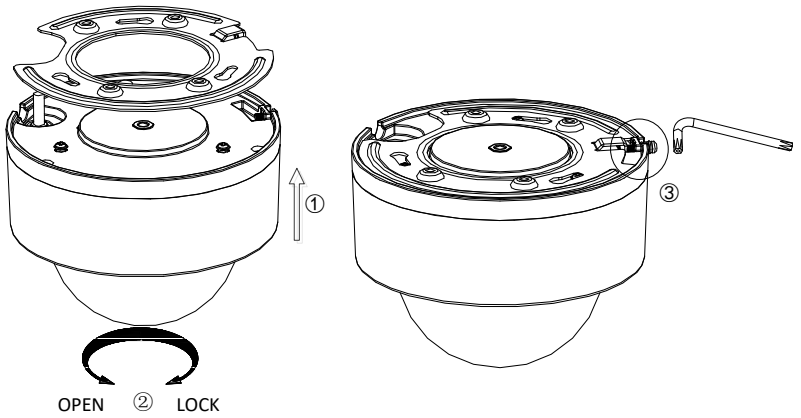

Figure 2-49 Fix the Camera

7. Secure the PTZ camera and remove the protective film.

2.5.2 In-ceiling Mounting

Notes:

- Reserve at least 250 mm of height for in-ceiling mounting.
- The thickness of the ceiling shall range from 5 mm to 40 mm.
- Make sure the ceiling is strong enough to withstand more than four times the weight of the PTZ camera and its accessories.

Steps:

1. Attach the drill template (supplied) to the place where you want to fix the PTZ camera, and drill a hole in the ceiling according to the template.

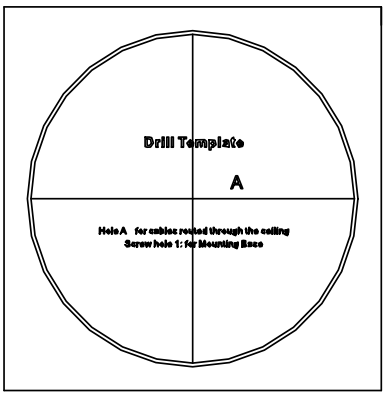

Figure 2-50 Drill Template

2. Fix the base plate onto the in-ceiling bracket with the four screws in the package (supplied). Make sure that the cable holes of the base plate are aligned to the cable holes of the bracket, as shown in Figure 2-48.

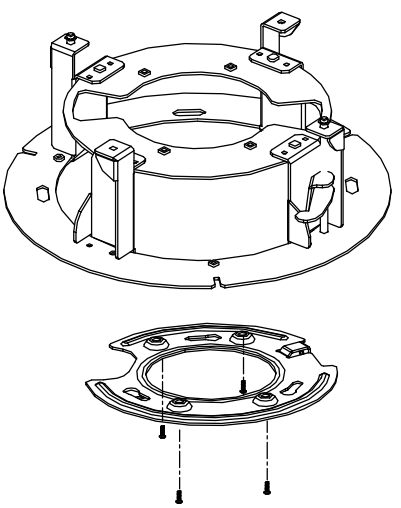

Figure 2-51 Fix the Base Plate to In-ceiling Bracket

3. Connect the cables and route the cable through the cable hole.

Note:

Water-proof treatment is required for cable connectors. Refer to section 2.9 and 2.10 for details.

4. Align the PTZ camera with the base plate. Rotate the PTZ camera clockwise into the base plate, and the PTZ camera is secured with the base plate by three locks on the plate.
5. Fix the screws on the side with a screwdriver, as shown in Figure 2-49.

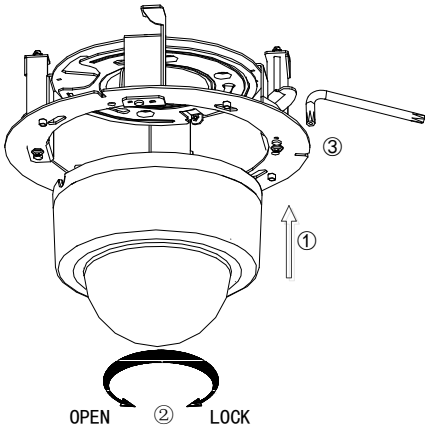

Figure 2-52 Fix the Camera

6. Fix the decorative rim with the bubble and the decorative rim will be attached to the in-ceiling bracket automatically, as shown in Figure 2-50.

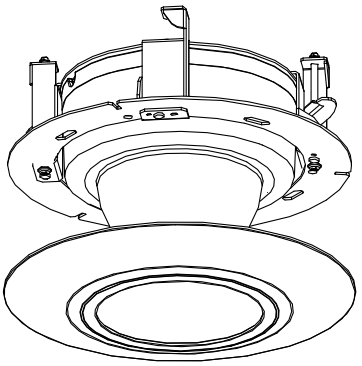

Figure 2-53 Assemble the Decorative Rim

7. Secure the camera and remove the protective film.

2.6 Installing DY3xxx Series PTZ Bullet Camera

2.6.1 Dimensions of DY3xxx Series PTZ Bullet Camera

Two structures of DY3xxx Series PTZ bullet cameras are available: wall-mounted PTZ bullet camera and base-mounted PTZ bullet camera.

Select the proper PTZ bullet camera and the installation method according to its working environment.

- Dimensions of wall-mounted PTZ bullet camera is shown in Figure 2-51.

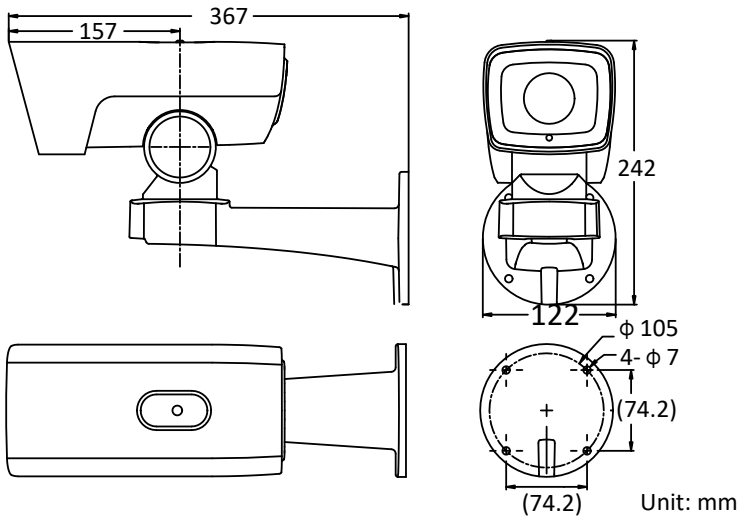

Figure 2-54 Wall-mounted PTZ Bullet Camera

- Dimensions of base mounted PTZ bullet camera is shown in Figure 2-52.

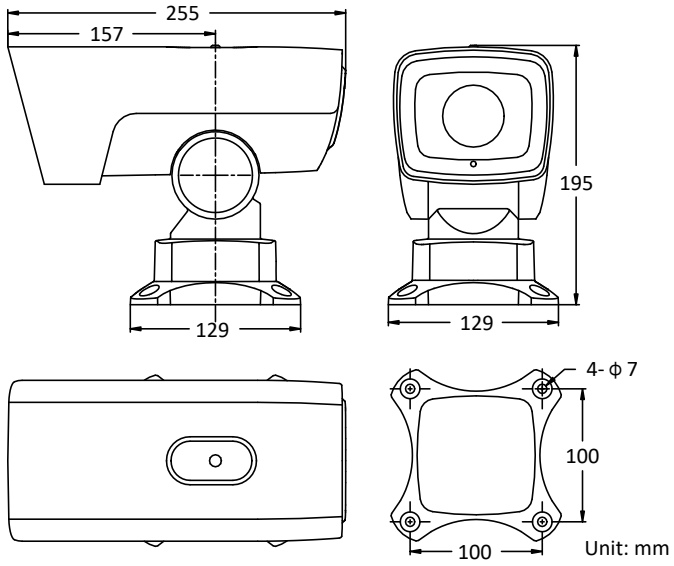

Figure 2-55 Base-mounted PTZ Bullet Camera

2.6.2 Wall Mounting

Before you start:

The wall-mounted PTZ bullet camera can be installed on cement wall and pole mounting. The installing environment shall meet the following conditions:

- For cement wall, you need to use the expansion screw to fix the bracket. The mounting hole of the expansion pipe on the wall should align with the mounting hole on the bracket.
- For wooden wall, you can just use the self-tapping screw to fix the bracket.
- Make sure that the wall is strong enough to withstand more than eight times the weight of the PTZ camera and its accessories.

Steps:

1. Drill screw holes on the wall according to the dimensions of wall-mounted camera and insert four M6 expansion screws into the screw holes, as shown in Figure 2-53.

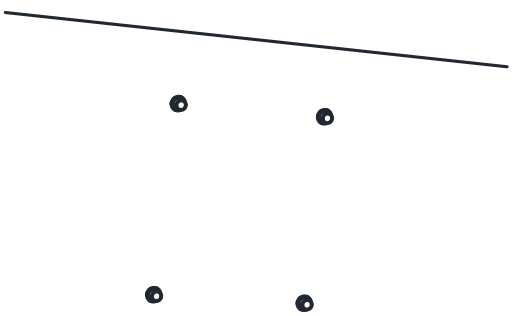

Figure 2-56 Drill Screw Holes

2. Route the cables through the camera bracket and cover the four hex nuts with flat washers.

3. Fix the camera on the wall by knocking the expansion screws into the wall through the bracket, as shown in Figure 2-54.

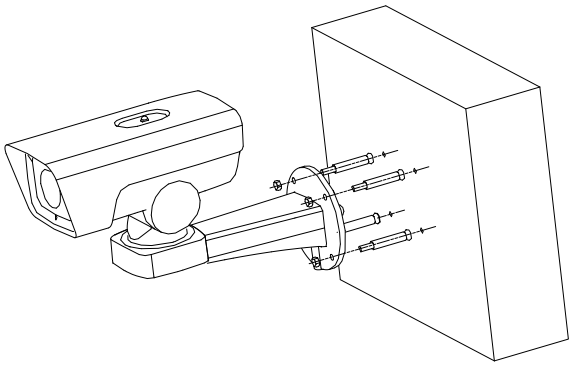

Figure 2-57 Install the Wall-mounted PTZ Bullet Camera

Notes:

- To install the PTZ bullet camera with the pole, you can use hexagon socket screws instead of the expansion screws.
- Water-proof treatment is required for cable connectors. Refer to section 2.9 and 2.10 for details.

2.6.3 Base Mounting

Before you start:

Base-mounted PTZ bullet camera can be installed on hard plane structures such as cement surface.

Note:

Make sure that the plane structure is strong enough to withstand more than eight times the weight of the PTZ camera and its accessories.

Steps:

1. Drill screw holes on the plane surface according to the dimensions of base-mounted camera.
2. Insert four M6 hexagon socket screws (with length of 30 mm) through the camera bracket and the plane structure, and then lock the screw nuts to fix the camera, as shown in Figure 2-55.

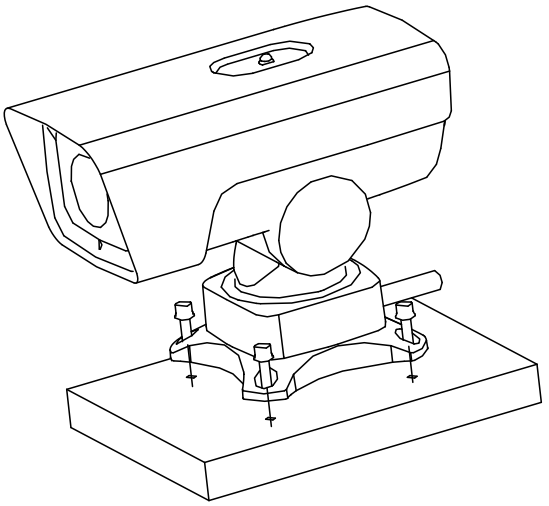

Figure 2-58 Install Base-mounted Camera

Note:

Water-proof treatment is required for cable connectors. Refer to section 2.9 and 2.10 for details.

2.7 Installing DE4AxxxI Series PTZ Camera

DE4AxxxI series (IR) PTZ camera supports ceiling mounting and in-ceiling mounting.

Note:

Wall mounting, pendant mounting, and installation with junction box are supported for DE4AxxxI series (IR) PTZ camera. The corresponding accessories shall be purchased separately.

2.7.1 Ceiling Mounting

Ceiling mounting for DE4AxxxI series (IR) PTZ camera is similar to ceiling mounting for DE2xxx series & DE2xxxI series (IR) PTZ camera. Refer to section ***2.4.2 Ceiling Mounting*** for details.

Note:

After DE4AxxxI series (IR) PTZ camera is installed, tighten the fixing screw with a screwdriver as shown in Figure 2-56.

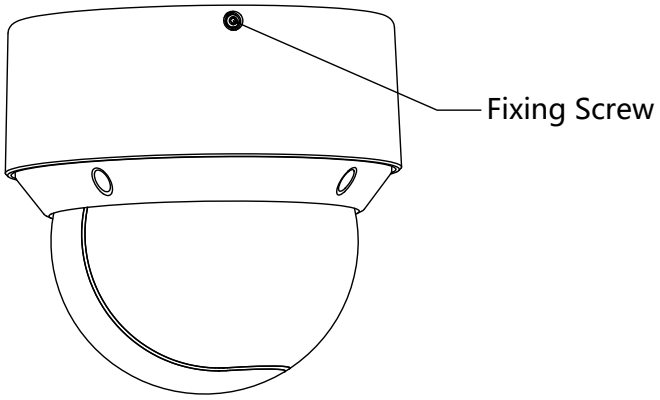

Figure 2-59 Tighten the Fixing Screw

2.7.2 In-ceiling Mounting

Notes:

- Reserve at least 250 mm of height for in-ceiling mounting.
- The thickness of the ceiling shall range from 5 mm to 40 mm.
- Make sure the ceiling is strong enough to withstand more than four times the weight of the PTZ camera and its accessories

Steps:

1. Rotate the base plate counterclockwise to separate it from the PTZ camera, as shown in Figure 2-57.

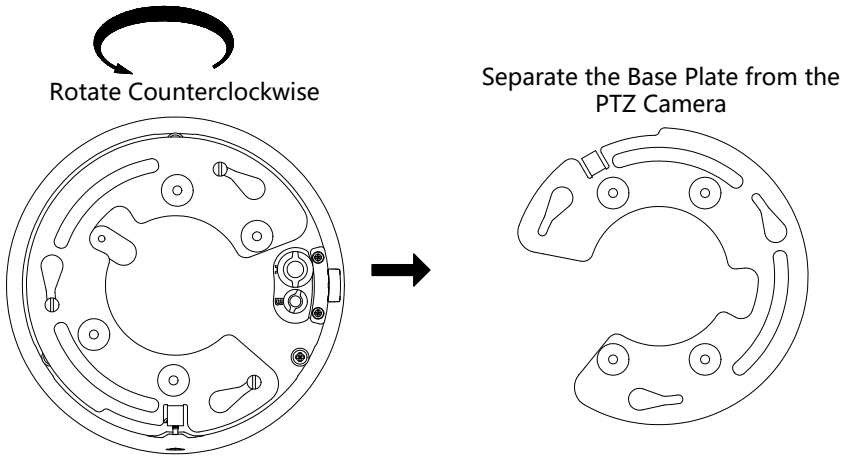

Figure 2-60 Separate the Base Plate from the PTZ camera

2. Attach the drill template (supplied) to the place where you want to fix the PTZ camera, and drill a hole in the ceiling according to the template.

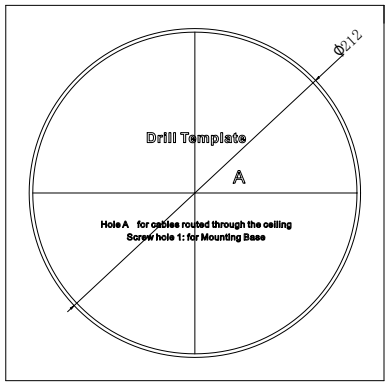

Figure 2-61 Drill Template

3. Align the cable holes of the base plate to the cable holes of the in-ceiling bracket and then fix the base plate onto the bracket with the four screws in the package (supplied), as shown in Figure 2-59.

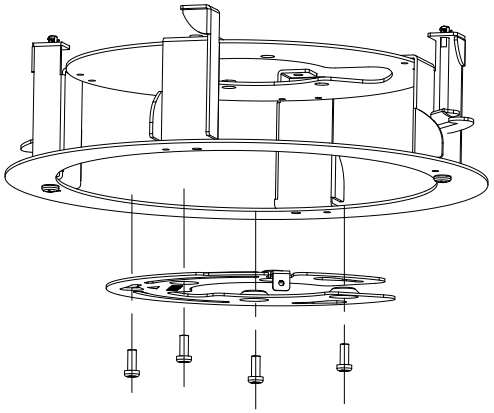

Figure 2-62 Fix the Base Plate to In-ceiling Bracket

4. Connect the cables and route the cables through the cable hole.

Note:

Water-proof treatment is required for cable connectors. Refer to section 2.9 and 2.10 for details.

5. Align the PTZ camera with the base plate. Rotate the PTZ camera clockwise into the base plate, and the PTZ camera is secured with the base plate by three locks on the plate.
6. Fix the screws on the side with a screwdriver, as shown in Figure 2-60.

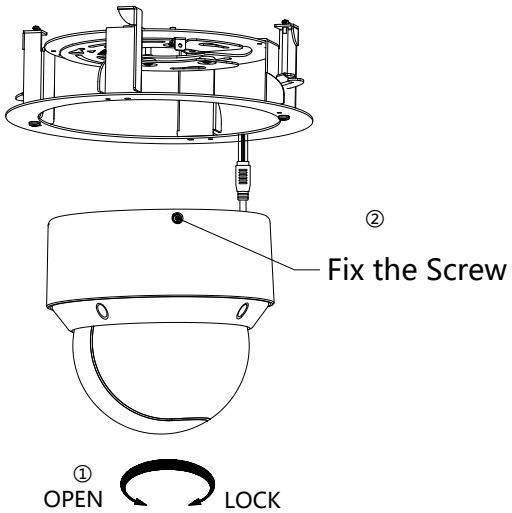

Figure 2-63 Fix the Camera

7. Place the camera and the bracket into the hole drilled in step 2, and rotate the screws clockwise to fix the camera.
8. Fix the decorative rim with the bubble and the decorative rim will be attached to the in-ceiling bracket automatically, as shown in Figure 2-61.

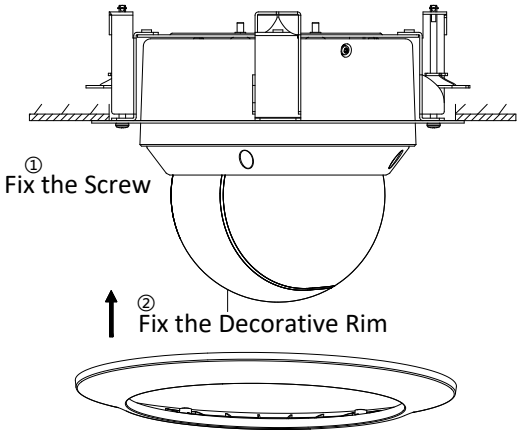

Figure 2-64 Assemble the Decorative Rim

2.8 Installing DE3AxxxI Series PTZ Camera

DE3AxxxI series PTZ camera only supports wall mounting.

2.8.1 Wall Mounting

Notes:

The camera can be installed on cement wall and wooden wall. The installing environment shall meet the following conditions:

- For cement wall, you need to use the expansion screw to fix the bracket. The mounting hole of the expansion pipe on the wall should align with the mounting hole on the bracket.

- For wooden wall, you can just use the self-tapping screw to fix the bracket.
- Make sure that the wall is strong enough to withstand more than eight times the weight of the PTZ camera and its cable

Steps:

1. Pull the bracket out from the side of the camera, and unclench the decorative cover as shown in Figure 2-65.

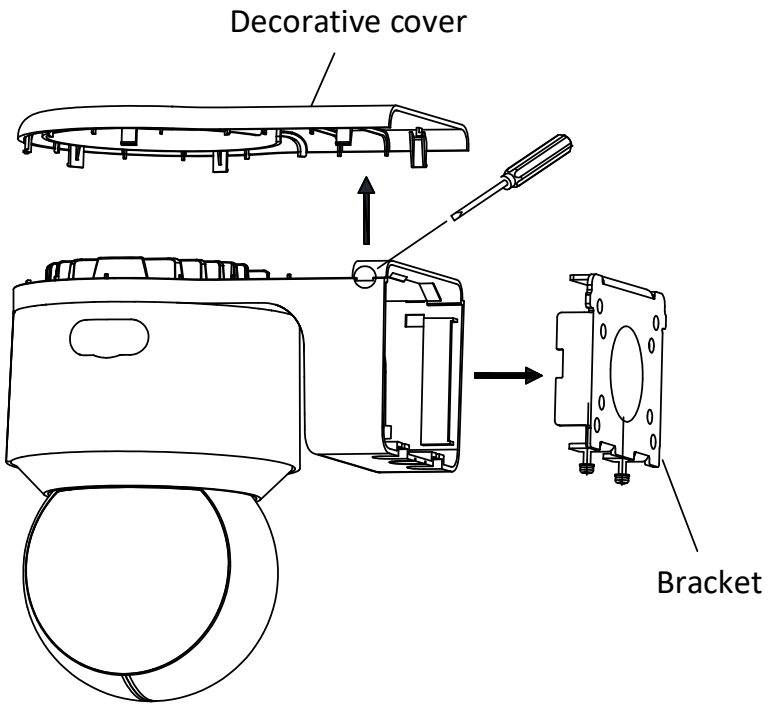

Figure 2-65 Open the Decorative cover and pull out bracket

2. The cables can be routed either through the wall or on the wall surface.

- For the cables routed through the wall, it is required to drill a cable hole on the wall, aligning it with the hole on the bracket,

and connect cables through the wall and the cable hole on the bracket.

- For the cables routed on the wall surface, you need to route the cables through the middle slot on the bottom of the back box, as shown in Figure 2-66.

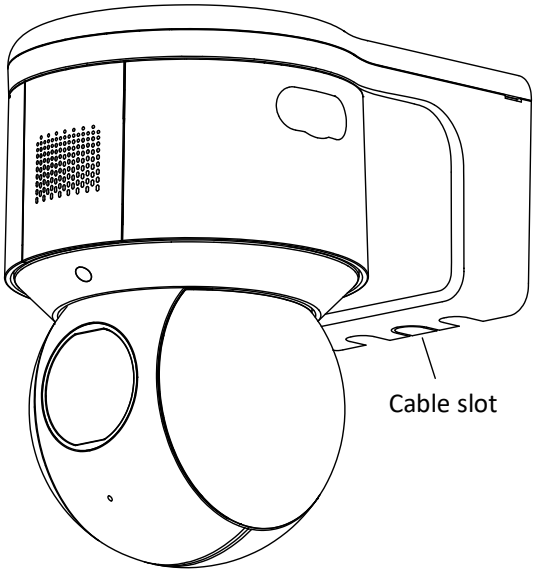

Figure 2-66 Wiring on the wall

3. Fix the bracket to the target position with four screws (PA4×25) in the package (supplied), making sure the direction of the sign ”UP” is upward as shown in Figure 2-67.

Notes:

- For cement wall, you need to use the expansion screw to fix the bracket. The mounting hole of the expansion pipe on the wall should align with the mounting hole on the bracket.
- For wooden wall, you can just use the self-tapping screw to fix the bracket.

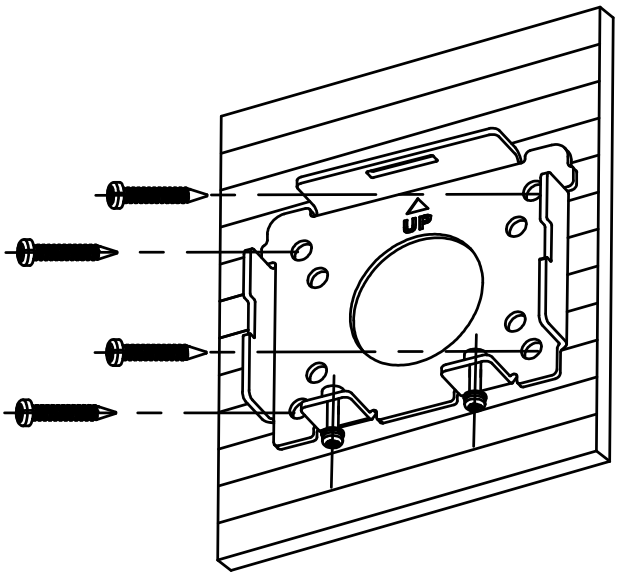

Figure 2-67 Fix the bracket

4. Fix the camera to the mounting bracket.
   a. Route the cables.
   b. Align the camera to the wall mounting bracket, and push camera body until hear a click sound.
   c. Tighten the screws under the bracket.

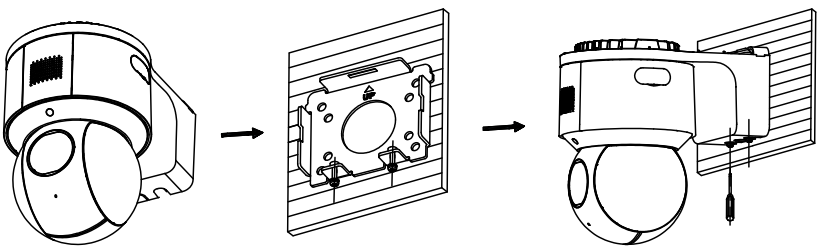

Figure 2-68 Fix the camera

5. Connect all the cables properly.

Note:

Water-proof treatment is required for cable connectors. Refer to section 2.9 and 2.10 for details.

6. Put cables in the back box, then close the decorative cover as shown in Figure 2-69.

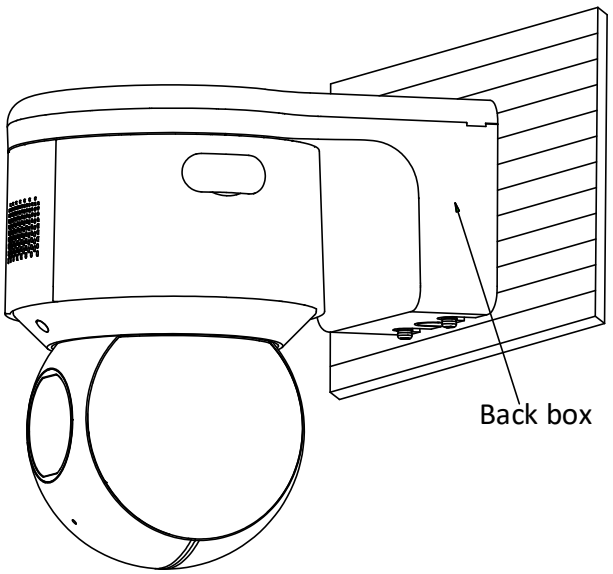

Figure 2-69 Connect the cables

2.9 Installation of Network Cable Water-proof Jacket

Purpose:

If the camera is installed outdoor, you can adapt the water-proof accessory for the network cable after the camera is secured on the installation surface.

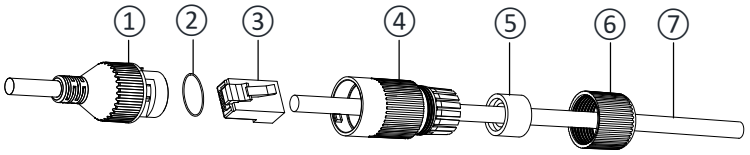

Figure 2-70 Water-proof Accessory Components

Table 2-1 Components

No.	Components
1	Camera's Network Interface Socket
2	O-Type Gasket
3	Network Plug
4	Waterproof Endcap
5	Waterproof Rubber Gasket
6	Lock Nut
7	Network Cable from Router/Switch

Steps:

1. Feed the plugless network cable ⑦ through the lock nut ⑥, waterproof rubber gasket ⑤ (the rubber gasket inset ridge must face the waterproof endcap), and the waterproof endcap ④ in order.
2. Crimp an RJ-45 network plug ③onto the end of the cable, taking care to insert the twisted pairs of wires in correct order.
3. Place the O-type gasket ② onto the end of the camera's network interface socket ①.
4. Insert the network plug ③ into the camera's network interface socket①.

5. Insert the waterproof rubber gasket ⑤ into the waterproof endcap ④, and secure lock nut ⑥ with the waterproof endcap ④.
6. Align the snap on the waterproof endcap ④ with the notch on the camera's network interface socket ①, and then secure the waterproof endcap ④ to the camera's network interface socket ① to finish installation.

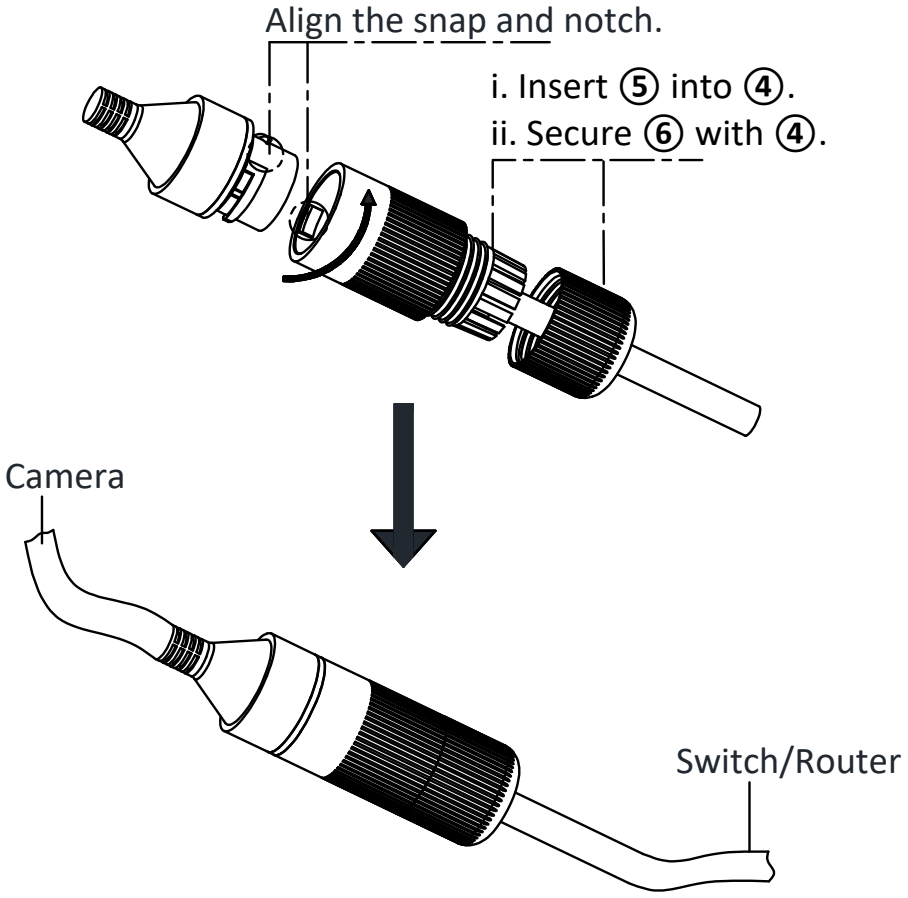

Figure 2-71 Water-proof Accessory Installation

2.10 Installation of Water-proof Tape

Purpose:

If the camera is installed outdoor, you can use supplied water-proof tape to protect cable connectors and unused cables after the camera is secured on the installation surface.

Steps:

1. Tear off the yellow release paper on the back of the water-proof tape.
2. Stretch the water-proof tape to reach twice the initial length.

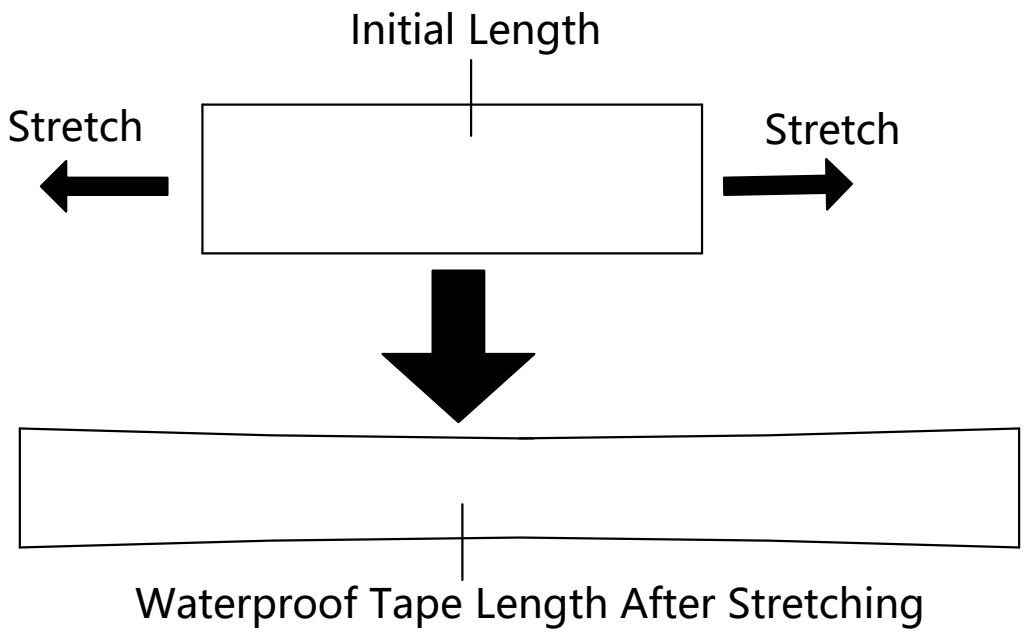

Figure 2-72 Stretch the Water-proof Tape

3. Wrap the water-proof tape around the cable connector tightly as the figure below.

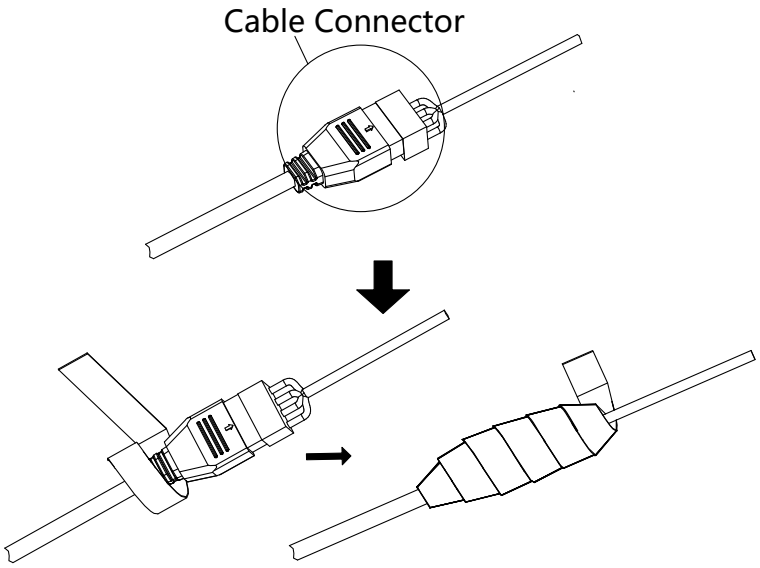

Figure 2-73 Wrap the Water-proof Tape

Note:

Make sure that all naked wires are all firmly wrapped in the water-proof tape.

4. Press the tape on both ends of the connector to make sure no water can get in as the figure below.

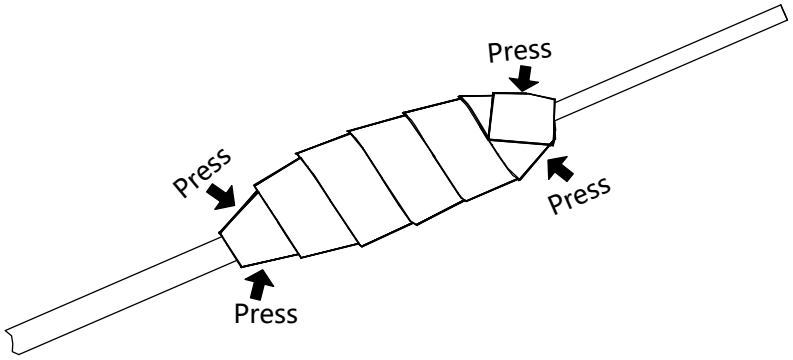

Figure 2-74 Press the Water-proof Tape

5. Wrap the water-proof tape around the remaining unused cables tightly as the figure below.

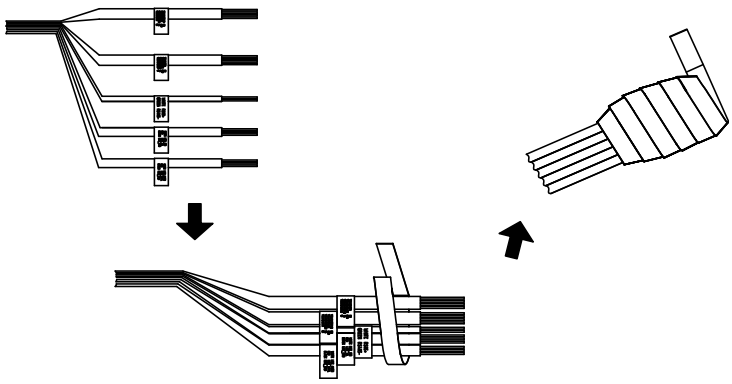

Figure 2-75 Wrap the Unused Cables

Note:

Make sure that all naked wires are all firmly wrapped in the water-proof tape.

6. Press the tape to make sure no water can get in as the figure below.

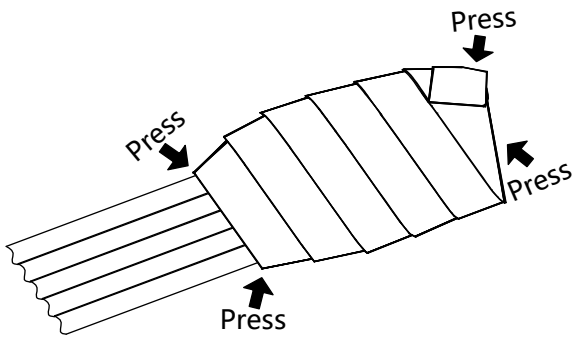

Figure 2-76 Press the Water-proof Tape

3 Setting the PTZ Camera over the LAN

Notes:

- You shall acknowledge that the use of the product with Internet access might be under network security risks. For avoidance of any network attacks and information leakage, strengthen your own protection. If the product does not work properly, contact with your dealer or the nearest service center.
- To ensure network security of the network PTZ camera, we recommend you to have the camera assessed and maintained termly. You can contact us if you need such service.

3.1 Wiring

To view and configure the network PTZ camera via LAN (Local Area Network), you need to connect the network PTZ camera in the same subnet with your PC. Then, install the SADP or client software to search and change the IP address of network PTZ camera.

Connect the camera to network according to the following figures.

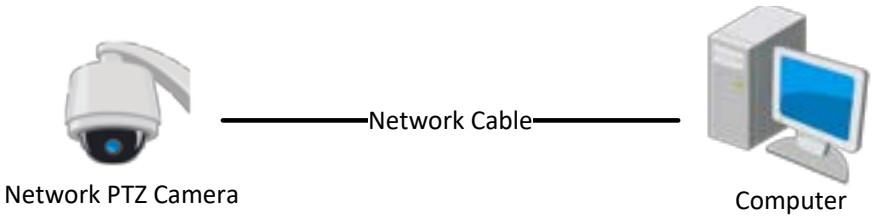

Figure 3-1 Connecting Directly

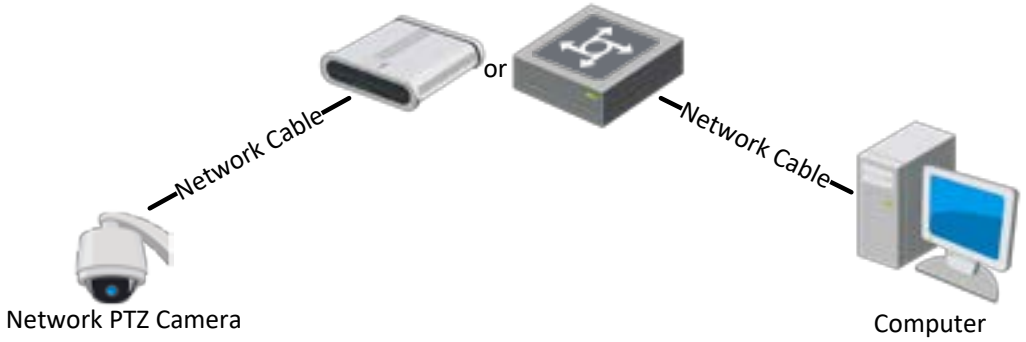

Figure 3-2 Connecting via a Switch or a Router

3.2 Activating the Camera

Purpose:

You are required to activate the camera first by setting a strong password for it before you can use the camera.

Activation via web browser, activation via SADP, and activation via client software are supported. We will take activation via SADP software and activation via web browser as examples to introduce the camera activation.

Note:

For the details of activation via client software, refer to the user manual of the network camera.

3.2.1 Activation via Web Browser

Steps:

1. Power on the camera. Connect the camera to your computer or the switch/router which your computer connects to.
2. Input the IP address into the address bar of the web browser, and enter the activation interface.

Notes:

- The default IP address of the camera is 192.168.1.64.
- The computer and the camera should belong to the same subnet.
- For the camera enables the DHCP by default, you need to use the SADP software to search the IP address.

Figure 3-3 Activation Interface (Web)

3. Create a password and input the password into the password field.

<u>STRONG PASSWORD RECOMMENDED</u>– *We highly recommend you create a strong password of your own choosing (using a minimum of 8 characters, including at least three of the following categories: upper case letters, lower case letters, numbers, and special characters) in order to increase the security of your product. And we recommend you reset your password regularly, especially in the high security system, resetting the password monthly or weekly can better protect your product.*

4. Confirm the password.
5. Click **OK** to activate the camera and enter the live view interface.

3.2.2 Activation via SADP Software

SADP software is used for detecting the online device, activating the device, and resetting the password.

Get the SADP software from the supplied disk or the official website, and install the SADP according to the prompts.

Follow the steps to activate the camera.

Steps:

1. Run the SADP software to search the online devices.
2. Check the device status from the device list, and select an inactive device.

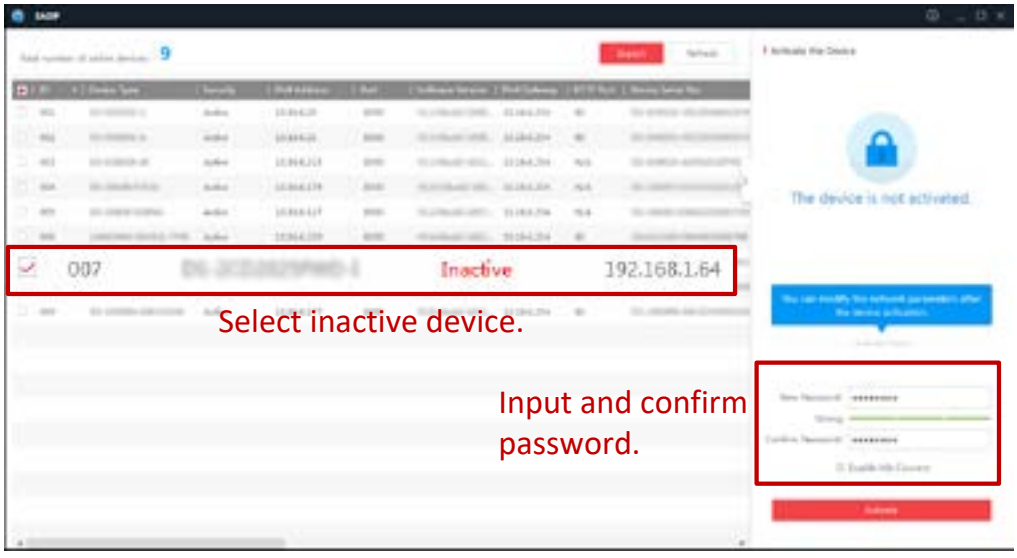

Figure 3-4 SADP Interface

Note:

The SADP software supports activating the camera in batch. Refer to the user manual of SADP software for details.

3. Create a password and input the password in the password field, and confirm the password.

STRONG PASSWORD RECOMMENDED– *We highly recommend you create a strong password of your own choosing (using a minimum of 8 characters, including at least three of the following categories: upper case letters, lower case letters, numbers, and special characters) in order to increase the security of your product. And we recommend you reset your password regularly, especially in the high security system, resetting the password monthly or weekly can better protect your product.*

Note:

You can enable the Hik-Connect service for the device during activation. Refer to section ***5.1 Enable Hik-Connect Service on Camera.***

4. Click **Activate** to save the password.

Note:

You can check whether the activation is completed on the popup window. If activation failed, make sure that the password meets the requirement and try again.

3.3 Modifying the IP Address

Purpose:

To view and configure the camera via LAN (Local Area Network), you need to connect the network camera in the same subnet with your PC.

Use the SADP software or client software to search and change the IP address of the device. We take modifying the IP Address via SADP software as an example to introduce the IP address modification.

Note:

For IP address modification via client software, refer to the user manual of client software.

Steps:

1. Run the SADP software.
2. Select an active device.
3. Change the device IP address to the same subnet with your computer by either modifying the IP address manually or checking the **Enable DHCP** checkbox.

Figure 3-5 Modify the IP Address

Note:

You can enable the Hik-Connect service for the device during activation. Refer to section ***5.1 Enable Hik-Connect Service on Camera.***

4. Input the admin password and click **Modify** to activate your IP address modification. The batch IP address modification is supported by SADP. Refer to the user manual of SADP for details.

4 Accessing via Web Browser

System Requirement:

Operating System: Microsoft Windows XP SP1 and above version/Vista/Win7/Server 2003/Server 2008 32bits

CPU: Intel Pentium IV 3.0 GHz or higher

RAM: 1G or higher

Display: 1024 × 768 resolution or higher

Web Browser: Internet Explorer 8.0 and above version, Apple Safari 5.02 and above version, Mozilla Firefox 5 and above version and Google Chrome 18 and above version

Steps:

1. Open the web browser.
2. In the browser address bar, input the IP address of the network PTZ camera, and enter the login interface.

   Note:

   The default IP address is 192.168.1.64. You are recommended to change the IP address to the same subnet with your computer.
3. Input the user name and password.

   The admin user should configure the device accounts and user/operator permissions properly. Delete the unnecessary accounts and user/operator permissions.

   Note:

   The device IP address gets locked if the admin user performs 7 failed password attempts (5 attempts for the user/operator).

4. Click **Login**.

Figure 4-1 Login Interface

5. Install the plug-in before viewing the live video and managing the network PTZ camera. Follow the installation prompts to install the plug-in.

   Note:

   You may have to close the web browser to finish the installation of the plug-in.

Figure 4-2 Download Plug-in

6. Reopen the web browser after the installation of the plug-in and repeat the above steps 2-4 to login.

Note:

For detailed instructions of further configuration, refer to the user manual of the network camera.

5 Operating via Hik-Connect App

Purpose:

Hik-Connect is an application for mobile devices. With the App, you can view live image of the camera, receive alarm notification and so on.

Note:

Hik-Connect service is not supported by certain camera models.

5.1 Enable Hik-Connect Service on Camera

Purpose:

Hik-Connect service should be enabled on your camera before using the service.

You can enable the service through SADP software or web browser.

5.1.1 Enable Hik-Connect Service via SADP Software

Steps:

1. Check the **Enable Hik-Connect** checkbox on:
   1). "Activate the Device" page during camera activation, refer to section ***3.2.2 Activation via SADP Software***.
   2). Or "Modify Network Parameters" page during modifying IP address, refer to section ***3.3 Modifying the IP Address***.
2. Create a verification code or change the verification code.

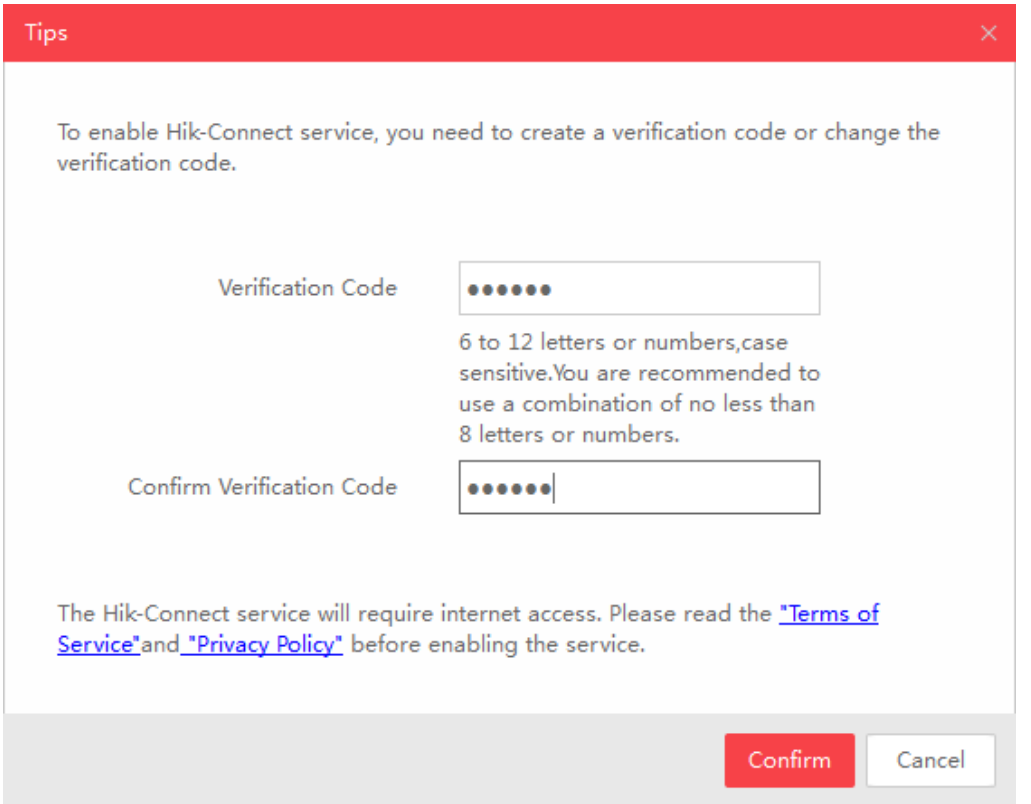

Figure 5-1 Verification Code Setting (SADP)

Note:

The verification code is required when you add the camera to Hik-Connect app.

3. Click and read "Terms of Service" and "Privacy Policy".
4. Confirm the settings.

5.1.2 Enable Hik-Connect Service via Web Browser

Before you start:

You need to activate the camera before enabling the service. Refer to section ***3.2 Activating the Camera***.

Steps:

1. Access the camera via web browser. Refer to section ***4 Accessing via Web Browser***.
2. Enter platform access configuration interface:

   Configuration > Network > Advanced Settings > Platform Access

Figure 5-2 Platform Access Configuration (Web)

3. Select Platform Access Mode as Hik-Connect.
4. Check the **Enable** checkbox.
5. Click and read "Terms of Service" and "Privacy Policy" in pop-up window.
6. Create a verification code or change the verification code for the camera.

   Note:

   The verification code is required when you add the camera to Hik-Connect app.

7. Save the settings.

5.2 Hik-Connect Setup

Steps:

1. Download and install the Hik-Connect app by searching "Hik-Connect" in App Store or Google Play™.
2. Launch the app and register for a Hik-Connect user account.
3. Log in Hik-Connect app after registration.

5.3 Adding Camera to Hik-Connect

Before you start:

You need to enable the Hik-Connect service on camera before adding it to your Hik-Connect account. Refer to section ***5.1 Enable Hik-Connect Service on Camera.***

Steps:

1. Use a network cable to connect the camera with a router if the camera does not support Wi-Fi.

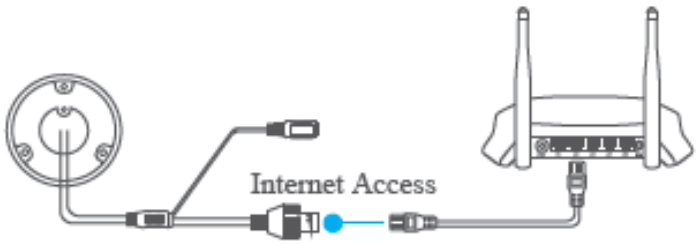

Figure 5-3 Connect a Router

Note:

After the camera connects to the network, wait one minute before any operation on the camera using Hik-Connect app.

2. In the Hik-Connect app, tap "+" on the upper-right corner and then scan the QR code of the camera to add the camera.

You can find the QR code on the camera or on the cover of the quick start guide of the camera in the package.

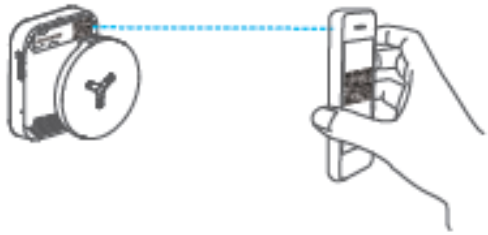

Figure 5-4 Scan QR Code

Note:

If the QR code is missing or too blur to be recognized, you can also add the camera by tapping the icon and inputting the camera's serial number.

3. Input the verification code of your camera.

Notes:

- The required verification code is the code you create or change when you enabling Hik-Connect service on camera.
- If you forget the verification code, you can check the current verification code on **Platform Access** configuration page via web browser.

4. Follow the prompts to set the network connection and add the camera to your Hik-Connect account.

Note:

For detailed information, refer to the user manual of the Hik-Connect app.

5.4 Initializing the Memory Card

Check the memory card status by tapping on the Storage Status in the Device Settings interface.

If the memory card status displays as Uninitialized, tap to initialize it. The status will then change to Normal. You can then start recording any event triggered video in the camera such as motion detection.

This device complies with Part 15 of the FCC Rules. Operation is subject to the following two conditions:

(1) This device may not cause harmful interference, and

(2) This device must accept any interference received, including interference that may cause undesired operation.

Note: This product has been tested and found to comply with the limits for a Class B digital device, pursuant to Part 15 of the FCC Rules. These limits are designed to provide reasonable protection against harmful interference in a residential installation. This product generates, uses, and can radiate radio frequency energy and, if not installed and used in accordance with the instructions, may cause harmful interference to radio communications. However, there is no guarantee that interference will not occur in a particular installation. If this product does cause harmful interference to radio or television reception, which can be determined by turning the equipment off and on, the user is encouraged to try to correct the interference by one or more of the following measures:

—Reorient or relocate the receiving antenna.

—Increase the separation between the equipment and receiver.

—Connect the equipment into an outlet on a circuit different from that to which the receiver is connected.

—Consult the dealer or an experienced radio/TV technician for help.

Please take attention that changes or modification not expressly approved by the party responsible for compliance could void the user's authority to operate the equipment.

This equipment complies with FCC/IC RSS-102 radiation exposure limits set forth for an uncontrolled environment. This equipment should be installed and operated with minimum distance 20cm between the radiator & your body.

This device complies with Industry Canada licence-exempt RSS standard(s). Operation is subject to the following two conditions:

(1) this device may not cause interference, and

(2) this device must accept any interference, including interference that may cause undesired operation of the device.

Le présent appareil est conforme aux CNR d'Industrie Canada applicables aux appareils radioexempts de licence. L'exploitation est autorisée aux deux conditions suivantes :

(1) l'appareil ne doit pas produire de brouillage, et

(2) l'utilisateur de l'appareil doit accepter tout brouillage radioélectrique subi, même si le brouillage est susceptible d'en compromettre le fonctionnement.

Under Industry Canada regulations, this radio transmitter may only operate using an antenna of a type and maximum (or lesser) gain approved for the transmitter by Industry Canada. To reduce potential radio interference to other users, the antenna type and its gain should be so chosen that the equivalent isotropically radiated power (e.i.r.p.) is not more than that necessary for successful communication.

Conformément à la réglementation d'Industrie Canada, le présent émetteur radio peut

fonctionner avec une antenne d'un type et d'un gain maximal (ou inférieur) approuvé pour l'émetteur par Industrie Canada. Dans le but de réduire les risques de brouillage radioélectrique à l'intention des autres utilisateurs, il faut choisir le type d'antenne et son gain de sorte que la puissance isotrope rayonnée équivalente (p.i.r.e.) ne dépasse pas l'intensité nécessaire à l'établissement d'une communication satisfaisante.

ce matériel est conforme aux limites de dose d'exposition aux rayonnements, FCC / CNR-102 énoncée dans un autre environnement.cette eqipment devrait être installé et exploité avec distance minimale de 20 entre le radiateur et votre corps.

See Far, Go Further

UD11955B