HIKVISION

DS-K1T331 Series
Face Recognition Terminal

Quick Start Guide
UD15536B

©2019 Hangzhou Hikvision Digital Technology Co., Ltd.
It includes instructions on how to use the Product. The software embodied in the Product is governed by the user license agreement covering that Product.
About this Manual
This Manual is subject to domestic and international copyright protection. Hangzhou Hikvision Digital Technology Co., Ltd. ("Hikvision") reserves all rights to this manual. This manual cannot be reproduced, changed, translated, or distributed, partially or wholly, by any means, without the prior written permission of Hikvision.
Trademarks
HIKVISION and other Hikvision marks are the property of Hikvision and are registered trademarks or the subject of applications for the same by Hikvision and/or its affiliates. Other trademarks mentioned in this manual are the properties of their respective owners. No right of license is given to use such trademarks without express permission.
Legal Disclaimer
TO THE MAXIMUM EXTENT PERMITTED BY APPLICABLE LAW, THE PRODUCT DESCRIBED, WITH ITS HARDWARE, SOFTWARE AND FIRMWARE, IS PROVIDED "AS IS", WITH ALL FAULTS AND ERRORS, AND HIKVISION MAKES NO WARRANTIES, EXPRESS OR IMPLIED, INCLUDING WITHOUT LIMITATION, MERCHANTABILITY, SATISFACTORY QUALITY, FITNESS FOR A PARTICULAR PURPOSE, AND NON-INFRINGEMENT OF THIRD PARTY. IN NO EVENT WILL HIKVISION, ITS DIRECTORS, OFFICERS, EMPLOYEES, OR AGENTS BE LIABLE TO YOU FOR ANY SPECIAL, CONSEQUENTIAL, INCIDENTAL, OR INDIRECT DAMAGES, INCLUDING, AMONG OTHERS, DAMAGES FOR LOSS OF BUSINESS PROFITS, BUSINESS INTERRUPTION, OR LOSS OF DATA OR DOCUMENTATION, IN CONNECTION WITH THE USE OF THIS PRODUCT, EVEN IF HIKVISION HAS BEEN ADVISED OF THE POSSIBILITY OF SUCH DAMAGES.
REGARDING TO THE PRODUCT WITH INTERNET ACCESS, THE USE OF PRODUCT SHALL BE WHOLLY AT YOUR OWN RISKS. HIKVISION SHALL NOT TAKE ANY RESPONSIBILITIES FOR ABNORMAL OPERATION, PRIVACY LEAKAGE OR OTHER DAMAGES RESULTING FROM CYBER ATTACK, HACKER ATTACK, VIRUS INSPECTION, OR OTHER INTERNET SECURITY RISKS; HOWEVER, HIKVISION WILL PROVIDE TIMELY TECHNICAL SUPPORT IF REQUIRED.
SURVEILLANCE LAWS VARY BY JURISDICTION. PLEASE CHECK ALL RELEVANT LAWS IN YOUR JURISDICTION BEFORE USING THIS PRODUCT IN ORDER TO ENSURE THAT YOUR USE CONFORMS THE APPLICABLE LAW. HIKVISION SHALL NOT BE LIABLE IN THE EVENT THAT THIS PRODUCT IS USED WITH ILLEGITIMATE PURPOSES.
IN THE EVENT OF ANY CONFLICTS BETWEEN THIS MANUAL AND THE APPLICABLE LAW, THE LATER PREVAILS.
Data Protection
During the use of device, personal data will be collected, stored and processed. To protect data, the development of Hikvision devices incorporates privacy by design principles. For example, for device with facial recognition features, biometrics data is stored in your device with encryption method; for fingerprint device, only fingerprint template will be saved, which is impossible to reconstruct a fingerprint image.
As data controller, you are advised to collect, store, process and transfer data in accordance with the applicable data protection laws and regulations, including without limitation, conducting security controls to safeguard personal data, such as, implementing reasonable administrative and physical security controls, conduct periodic reviews and assessments of the effectiveness of your security controls.

1 Installation

Installation Environment:

- Avoid backlight, direct sunlight, and indirect sunlight.
- For better recognition, there should be light source in or near the installation environment.

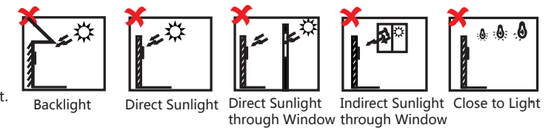

Installation with Gang Box:

Before you start:
According to the baseline on the mounting template, stick the mounting template on the wall or other surface, 1.45 meters higher than the ground.
Note: Make sure the output of external power supply fulfils LPS.
Steps:
1. Drill holes on the wall or other surface according to the mounting template and install the gang box.
2. Use two supplied screws (SC-KM4x25-SUS or KA4×22-SUS) to secure the mounting plate on the gang box.
   Route the cables through the cable hole of the mounting plate, and connect the terminals with the external devices' cables.
3. Align the device with the mounting plate and hang the device on the mounting plate.
4. Use one supplied screw to secure the device and the mounting plate.

Notes:
- The installation height here is the recommended height. You can change it according to your actual needs.
- For easy installation, drill holes on mounting surface according to the supplied mounting template.

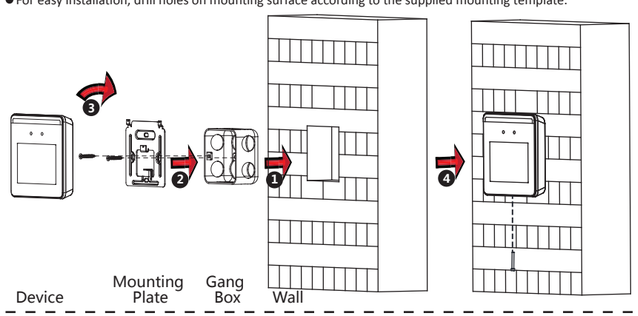

Base Mounting:

1. Route the cables through the cable hole of the bracket, and connect the terminals with external devices' cables.
2. Align the device two holes with the two buckles on the bracket.
3. Hang the device on the bracket and make sure the buckle in the middle of the bracket is inserted in the groove on the device back.
4. Place the assembled device and bracket on the desk or other flats.

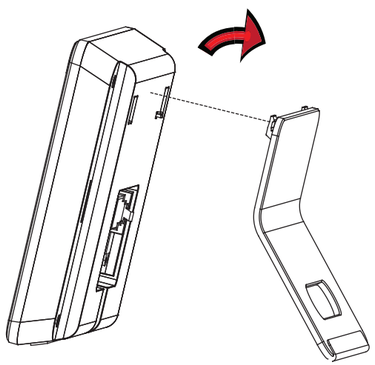

Appearance and Dimension:

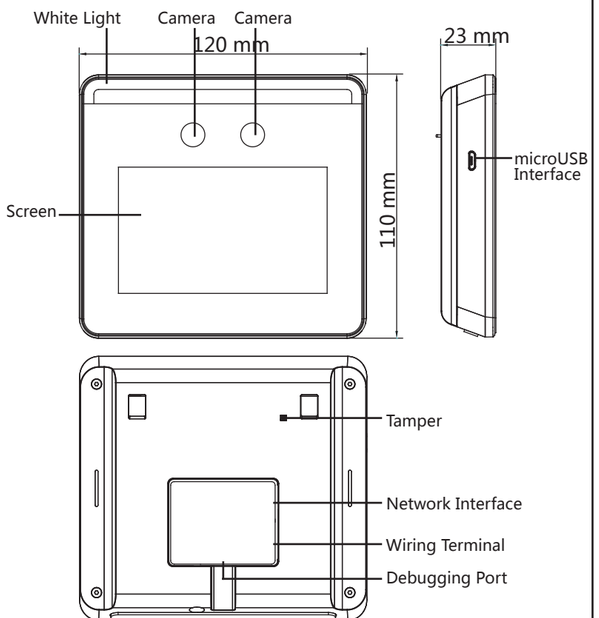

Note: The figures are for reference only.

2.1 Device Wiring (Normal)

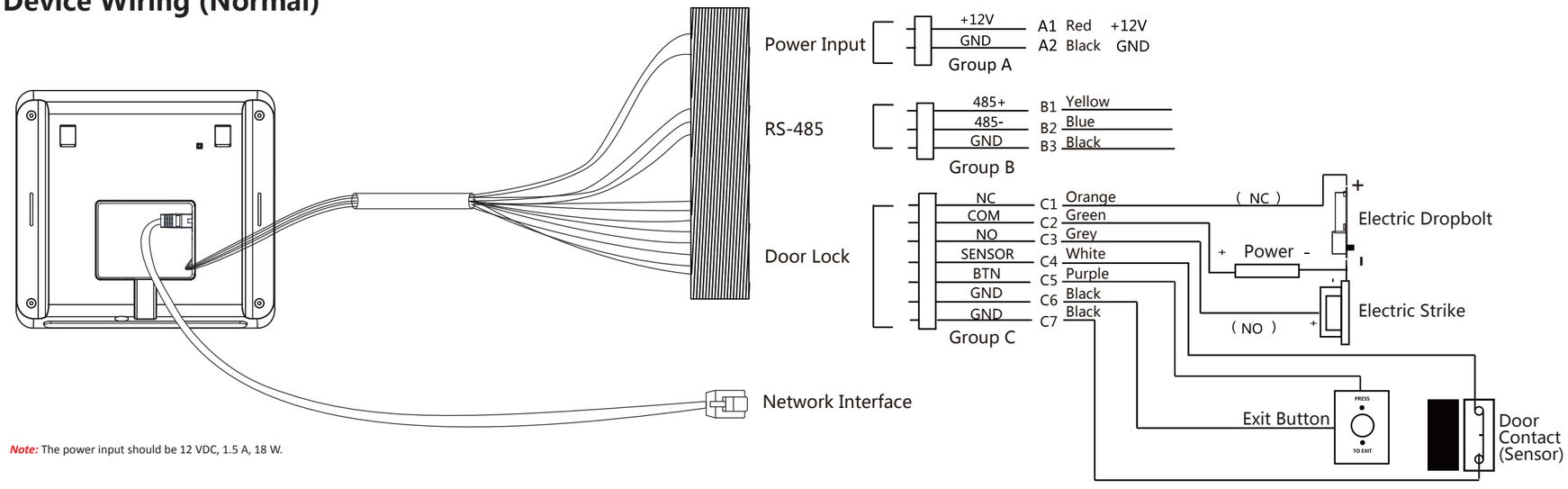

Note: The power input should be 12 VDC, 1.5 A, 18 W.

3 Activation

● Activate via Device

Power on and wire the network cable after installation. You should activate the device before the first login.

If the device is not activated yet, it will enter the Activate Device page after powering on.

Steps:

1. Create a password and confirm the password.
2. Tap **Activate** to activate the device.

Note: For other activation methods, see the device user manual.

3. Set application mode and recognition mode by following the instructions according to your actual needs.

STRONG PASSWORD RECOMMENDED–
We highly recommend you create a strong password of your own choosing (using a minimum of 8 characters, including upper case letters, lower case letters, numbers, and special characters) in order to increase the security of your product. And we recommend you reset your password regularly, especially in the high security system, resetting the password monthly or weekly can better protect your product.

● Activate via SADP Tool

1. Download SADP Software
Get the SADP software from the supplied disk. Install and run the software.
2. Activate Device
Check the inactive device from the device list. Create a password in the right side of the interface and confirm the password.
3. Edit Device IP Address
Check the device and manually edit the device IP address, Port No., Subnet Mask, Gateway, etc.

● Activate via Client Software

1. Get the client software from the official website. Install and run the client software.
2. Enter the Device Management page.
3. Click Device tab on the top of the right panel.
4. Click Online Device to show the online device area at the bottom of the page.
The searched online devices are displayed in the list.
5. Check the device status (shown on Security Level column) and select an inactive device.
6. Click Activate to open the Activation dialog.
7. Create a password in the password field, and confirm the password.
8. Click OK to activate the device.
9. Select an activated device in Online Device area, click on the Operation column to open the Modify Network Parameter window. Change the device IP address to the same subnet with your computer if you need to add the device to the client.

Use only power supplies listed in the user instructions:

Model	Manufacturer	Standard
ADS-26FSG-12 12018EPG	Shenzhen Honor Electronic Co., Ltd.	PG
ADS-26FSG-12 12018EPI-01	Shenzhen Honor Electronic Co., Ltd.	PI
ADS-26FSG-12 12018EPCU	Shenzhen Honor Electronic Co., Ltd.	PCU
ADS-26FSG-12 12018EPB	Shenzhen Honor Electronic Co., Ltd.	PB
MSA-C1500IC12.0-18P-BR	MOSO Technology Co., Ltd.	PBR

Scan the QR code to get the user manual for detailed information.
Note that mobile data charges may apply if Wi-Fi is unavailable.

4 Adding Face Information

1. Long tap the initial page and input the activation password to enter the main menu.

2. Enter the User Management page, tap + to enter the Add User page.

3. Tap **Face** and collect the face information according to the instructions.
You can view the captured picture at the upper right corner of the page. Make sure the face picture is in good quality and size. For details about the tips and positions when collecting or comparing the face picture, see the contents on the right.

4. If the picture is in good condition, tap Save to save the picture. Or tap **Try Again** to take another face picture.

5. Tap ✓ to save the settings.
Go back to the initial page to start authentication.
For other authentication methods, see the device user manual.

Recommended: Use other authentication methods if the device if affected by the light or other items.

1:N Matching: Compare the captured face picture or with all face pictures stored in the device.

Biometric recognition products are not 100% applicable to anti-spoofing environments. If you require a higher security level, use multiple authentication modes.

Tips When Collecting/ Comparing Face Picture

Expression

- Keep your expression naturally when collecting or comparing face pictures, just like the expression in the picture on the right.
- Do not wear hat, sunglasses, or other accessories that can affect the facial recognition function.
- Do not make your hair cover your eyes, ears, etc. and heavy makeup is not allowed.

Posture

In order to get a good quality and accurate face picture, position your face looking at the camera when collecting or comparing face pictures.

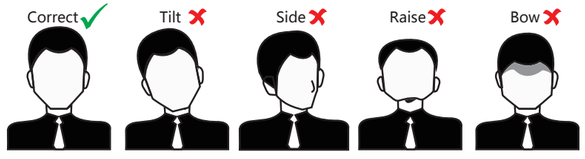

Size

Make sure your face is in the middle of the collecting window.

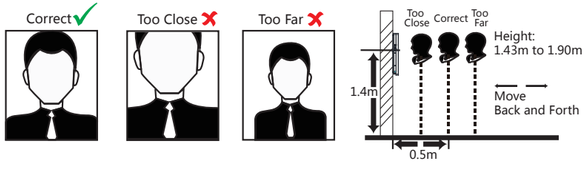

Positions When Collecting/ Comparing Face Picture (Recommended Distance: 0.5m)

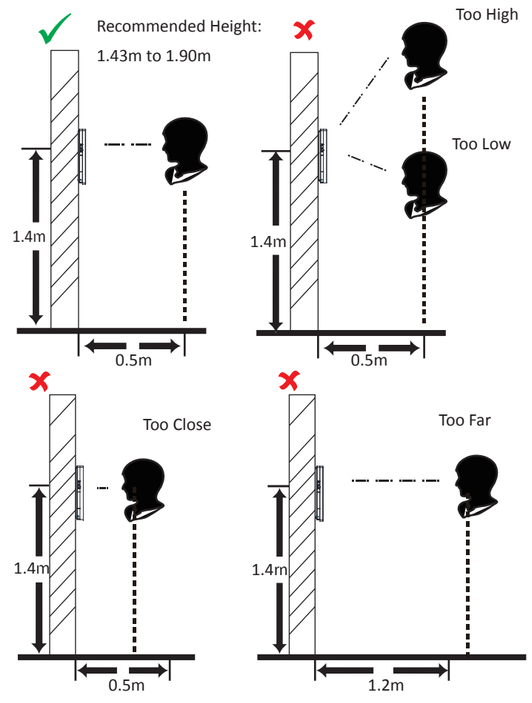

Regulatory Information

FCC Information

Please take attention that changes or modification not expressly approved by the party responsible for compliance could void the user's authority to operate the equipment.

FCC compliance: This equipment has been tested and found to comply with the limits for a Class B digital device, pursuant to part 15 of the FCC Rules. These limits are designed to provide reasonable protection against harmful interference in a residential installation. This equipment generates, uses and can radiate radio frequency energy and, if not installed and used in accordance with the instructions, may cause harmful interference to radio communications. However, there is no guarantee that interference will not occur in a particular installation. If this equipment does cause harmful interference to radio or television reception, which can be determined by turning the equipment off and on, the user is encouraged to try to correct the interference by one or more of the following measures:
—Reorient or relocate the receiving antenna.
—Increase the separation between the equipment and receiver.
—Connect the equipment into an outlet on a circuit different from that to which the receiver is connected.
—Consult the dealer or an experienced radio/TV technician for help.
This equipment should be installed and operated with a minimum distance 20cm between the radiator and your body.

FCC Conditions

This device complies with part 15 of the FCC Rules. Operation is subject to the following two conditions:
1. This device may not cause harmful interference.
2. This device must accept any interference received, including interference that may cause undesired operation.

This product and - if applicable - the supplied accessories too are marked with "CE" and comply therefore with the applicable harmonized European standards listed under the RE Directive 2014/53/EU, the EMC Directive 2014/30/EU, the RoHS Directive 2011/65/EU.

2006/66/EC (battery directive): This product contains a battery that cannot be disposed of as unsorted municipal waste in the European Union. See the product documentation for specific battery information. The battery is marked with this symbol, which may include lettering to indicate cadmium (Cd), lead (Pb), or mercury (Hg). For proper recycling, return the battery to your supplier or to a designated collection point. For more information see: *www.recycle-this.info*

2012/19/EU (WEEE directive): Products marked with this symbol cannot be disposed of as unsorted municipal waste in the European Union. For proper recycling, return this product to your local supplier upon the purchase of equivalent new equipment, or dispose of it at designated collection points. For more information see: *www.recyclethis.info*

Safety Instruction

These instructions are intended to ensure that user can use the product correctly to avoid danger or property loss.
The precaution measure is divided into Warnings and Cautions:
Warnings: Neglecting any of the warnings may cause serious injury or death.
Cautions: Neglecting any of the cautions may cause injury or equipment damage.

Warnings
- All the electronic operation should be strictly compliance with the electrical safety regulations, fire prevention regulations and other related regulations in your local region.
- Please use the power adapter, which is provided by normal company. The power consumption cannot be less than the required value.
- Do not connect several devices to one power adapter as adapter overload may cause over-heat or fire hazard.
- Please make sure that the power has been disconnected before you wire, install or dismantle the device.
- When the product is installed on wall or ceiling, the device shall be firmly fixed.
- If smoke, odors or noise rise from the device, turn off the power at once and unplug the power cable, and then please contact the service center.
- If the product does not work properly, please contact your dealer or the nearest service center. Never attempt to disassemble the device yourself. (We shall not assume any responsibility for problems caused by unauthorized repair or maintenance.)

Cautions
- Do not drop the device or subject it to physical shock, and do not expose it to high electromagnetism radiation. Avoid the equipment installation on vibrations surface or places subject to shock (ignorance can cause equipment damage).
- Do not place the device in extremely hot (refer to the specification of the device for the detailed operating temperature), cold, dusty or damp locations, and do not expose it to high electromagnetic radiation.
- The device cover for indoor use shall be kept from rain and moisture.
- Exposing the equipment to direct sun light, low ventilation or heat source such as heater or radiator is forbidden (ignorance can cause fire danger).
- Do not aim the device at the sun or extra bright places. A blooming or smear may occur otherwise (which is not a malfunction however), and affecting the endurance of sensor at the same time.
- Please use the provided glove when open up the device cover, avoid direct contact with the device cover, because the acidic sweat of the fingers may erode the surface coating of the device cover.
- Please use a soft and dry cloth when clean inside and outside surfaces of the device cover, do not use alkaline detergents.
- Please keep all wrappers after unpack them for future use. In case of any failure occurred, you need to return the device to the factory with the original wrapper. Transportation without the original wrapper may result in damage on the device and lead to additional costs.
- Improper use or replacement of the battery may result in hazard of explosion. Replace with the same or equivalent type only. Dispose of used batteries according to the instructions provided by the battery manufacturer.
- Biometric recognition products are not 100% applicable to anti-spoofing environments. If you require a higher security level, use multiple authentication modes.
- Indoor use. If installing the device indoors, the device should be at least 2 meters away from the light, and at least 3 meters away from the window or the door.