Swing Barrier

User Manual

User Manual

©2018 Hangzhou Hikvision Digital Technology Co., Ltd.

This manual applies to swing barrier.

Product Name	Model
Swing Barrier	DS-K3B801-M/M

About this Manual

This Manual is subject to domestic and international copyright protection. Hangzhou Hikvision Digital Technology Co., Ltd. ("Hikvision") reserves all rights to this manual. This manual cannot be reproduced, changed, translated, or distributed, partially or wholly, by any means, without the prior written permission of Hikvision.

Trademarks

and other Hikvision marks are the property of Hikvision and are registered trademarks or the subject of applications for the same by Hikvision and/or its affiliates. Other trademarks mentioned in this manual are the properties of their respective owners. No right of license is given to use such trademarks without express permission.

Disclaimer

TO THE MAXIMUM EXTENT PERMITTED BY APPLICABLE LAW, HIKVISION MAKES NO WARRANTIES, EXPRESS OR IMPLIED, INCLUDING WITHOUT LIMITATION THE IMPLIED WARRANTIES OF MERCHANTABILITY AND FITNESS FOR A PARTICULAR PURPOSE, REGARDING THIS MANUAL. HIKVISION DOES NOT WARRANT, GUARANTEE, OR MAKE ANY REPRESENTATIONS REGARDING THE USE OF THE MANUAL, OR THE CORRECTNESS, ACCURACY, OR RELIABILITY OF INFORMATION CONTAINED HEREIN. YOUR USE OF THIS MANUAL AND ANY RELIANCE ON THIS MANUAL SHALL BE WHOLLY AT YOUR OWN RISK AND RESPONSIBILITY.

REGARDING TO THE PRODUCT WITH INTERNET ACCESS, THE USE OF PRODUCT SHALL BE WHOLLY AT YOUR OWN RISKS. OUR COMPANY SHALL NOT TAKE ANY RESPONSIBILITIES FOR ABNORMAL OPERATION, PRIVACY LEAKAGE OR OTHER DAMAGES RESULTING FROM CYBER ATTACK, HACKER ATTACK, VIRUS INSPECTION, OR OTHER INTERNET SECURITY RISKS; HOWEVER, OUR COMPANY WILL PROVIDE TIMELY TECHNICAL SUPPORT IF REQUIRED.

SURVEILLANCE LAWS VARY BY JURISDICTION. PLEASE CHECK ALL RELEVANT LAWS IN YOUR JURISDICTION BEFORE USING THIS PRODUCT IN ORDER TO ENSURE THAT YOUR USE CONFORMS THE APPLICABLE LAW. OUR COMPANY SHALL NOT BE LIABLE IN THE EVENT THAT THIS PRODUCT IS USED WITH ILLEGITIMATE PURPOSES.

IN THE EVENT OF ANY CONFLICTS BETWEEN THIS MANUAL AND THE APPLICABLE LAW, THE LATER PREVAILS.

Support

Should you have any questions, please do not hesitate to contact your local dealer.

Regulatory Information

FCC Information

Please take attention that changes or modification not expressly approved by the party responsible for compliance could void the user's authority to operate the equipment.

FCC compliance: This equipment has been tested and found to comply with the limits for a Class B digital device, pursuant to part 15 of the FCC Rules. These limits are designed to provide reasonable protection against harmful interference in a residential installation. This equipment generates, uses and can radiate radio frequency energy and, if not installed and used in accordance with the instructions, may cause harmful interference to radio communications. However, there is no guarantee that interference will not occur in a particular installation. If this equipment does cause harmful interference to radio or television reception, which can be determined by turning the equipment off and on, the user is encouraged to try to correct the interference by one or more of the following measures:

—Reorient or relocate the receiving antenna.

—Increase the separation between the equipment and receiver.

—Connect the equipment into an outlet on a circuit different from that to which the receiver is connected.

—Consult the dealer or an experienced radio/TV technician for help.

FCC Conditions

This device complies with part 15 of the FCC Rules. Operation is subject to the following two conditions:

1. This device may not cause harmful interference.
2. This device must accept any interference received, including interference that may cause undesired operation.

EU Conformity Statement

This product and - if applicable - the supplied accessories too are marked with "CE" and comply therefore with the applicable harmonized European standards listed under the RE Directive 2014/53/EU, the EMC Directive 2014/30/EU, the RoHS Directive 2011/65/EU.

2012/19/EU (WEEE directive): Products marked with this symbol cannot be disposed of as unsorted municipal waste in the European Union. For proper recycling, return this product to your local supplier upon the purchase of equivalent new equipment, or dispose of it at designated collection points. For more information see: www.recyclethis.info

2006/66/EC (battery directive): This product contains a battery that cannot be disposed of as unsorted municipal waste in the European Union. See the product documentation for specific battery information. The battery is marked with this symbol, which may include lettering to indicate cadmium (Cd), lead (Pb), or mercury (Hg). For proper recycling, return the battery to your supplier or to a designated collection point. For more information see: www.recyclethis.info

Industry Canada ICES-003 Compliance

This device meets the CAN ICES-3 (B)/NMB-3(B) standards requirements.

This device complies with Industry Canada licence-exempt RSS standard(s). Operation is subject to the following two conditions:
(1) this device may not cause interference, and
(2) this device must accept any interference, including interference that may cause undesired operation of the device.
Le présent appareil est conforme aux CNR d'Industrie Canada applicables aux appareils radioexempts de licence. L'exploitation est autorisée aux deux conditions suivantes :
(1) l'appareil ne doit pas produire de brouillage, et
(2) l'utilisateur de l'appareil doit accepter tout brouillage radioélectrique subi, même si le brouillage est susceptible d'en compromettre le fonctionnement.
Under Industry Canada regulations, this radio transmitter may only operate using an antenna of a type and maximum (or lesser) gain approved for the transmitter by Industry Canada. To reduce potential radio interference to other users, the antenna type and its gain should be so chosen that the equivalent isotropically radiated power (e.i.r.p.) is not more than that necessary for successful communication.

Conformément à la réglementation d'Industrie Canada, le présent émetteur radio peut fonctionner avec une antenne d'un type et d'un gain maximal (ou inférieur) approuvé pour l'émetteur par Industrie Canada. Dans le but de réduire les risques de brouillage radioélectrique à l'intention des autres utilisateurs, il faut choisir le type d'antenne et son gain de sorte que la puissance isotrope rayonnée équivalente (p.i.r.e.) ne dépasse pas l'intensité nécessaire à l'établissement d'une communication satisfaisante.

Safety Instruction

These instructions are intended to ensure that user can use the product correctly to avoid danger or property loss.
The precaution measure is divided into **Warnings** and **Cautions**:
Warnings: Neglecting any of the warnings may cause serious injury or death.
Cautions: Neglecting any of the cautions may cause injury or equipment damage.

Warnings Follow these safeguards to prevent serious injury or death.	**Cautions** Follow these precautions to prevent potential injury or material damage.

Warnings

- All the electronic operation should be strictly compliance with the electrical safety regulations, fire prevention regulations and other related regulations in your local region.
- Please make sure the device is connected to ground.
- Please use the power supply, which is provided by normal company. The power consumption cannot be less than the required value.
- Do not connect several devices to one power supply as the overload may cause over-heat or fire hazard.
- Please make sure that the power has been disconnected before you wire, install or dismantle the device.

  If the top caps should be open and the device should be powered on for maintenance, make sure:

  1. Power off the fan to prevent the operator from getting injured accidently.
  2. Do not touch bare high-voltage components.
  3. Make sure the switch's wiring sequence is correct after maintenance.
- When the product is installed on wall or ceiling, the device shall be firmly fixed.
- If smoke, odors or noise rise from the device, turn off the power at once and unplug the power cable, and then please contact the service center.
- If the product does not work properly, please contact your dealer or the nearest service center. Never attempt to disassemble the device yourself. (We shall not assume any responsibility for problems caused by unauthorized repair or maintenance.)
- Exit the lane when the lane controller is rebooting.

Cautions

- Stainless steel may be corroded in some circumstances. You need to clean and care the device by using the stainless steel cleaner. It is suggested to clean the device every month.
- Do not drop the device or subject it to physical shock, and do not expose it to high electromagnetism radiation. Avoid the equipment installation on vibrations surface or places subject to shock (ignorance can cause equipment damage).
- Do not place the device in extremely hot (refer to the specification of the device for the detailed operating temperature), cold, dusty or damp locations, and do not expose it to high electromagnetic radiation.
- The device cover for indoor use shall be kept from rain and moisture.

- Exposing the equipment to direct sun light, low ventilation or heat source such as heater or radiator is forbidden (ignorance can cause fire danger).
- Do not aim the device at the sun or extra bright places. A blooming or smear may occur otherwise (which is not a malfunction however), and affecting the endurance of sensor at the same time.
- Please use the provided glove when open up the device cover, avoid direct contact with the device cover, because the acidic sweat of the fingers may erode the surface coating of the device cover.
- Please use a soft and dry cloth when clean inside and outside surfaces of the device cover, do not use alkaline detergents.
- Please keep all wrappers after unpack them for future use. In case of any failure occurred, you need to return the device to the factory with the original wrapper. Transportation without the original wrapper may result in damage on the device and lead to additional costs.
- Improper use or replacement of the battery may result in hazard of explosion. Replace with the same or equivalent type only. Dispose of used batteries according to the instructions provided by the battery manufacturer.
- Do not stay in the lane when the device is rebooting.
- RISK OF EXPLOSION IF BATTERY IS REPLACED BY AN INCORRECT TYPE. DISPOSE OF USED BATTERIES ACCORDING TO THE INSTRUCTIONS.
- SUITABLE FOR MOUNTING ON CONCRETE OR OTHER NON-COMBUSTIBLE SURFACE ONLY.

Table of Contents

Chapter 1 Overview 1
1.1 Introduction 1
1.2 Main Features 1
Chapter 2 Installation 3
2.1 Disassembling before Installation 3
2.2 Installing Device 7
Chapter 3 Disassembling before Maintenance 9
Chapter 4 Wiring 15
4.1 Components Introduction 15
4.2 Wiring Electric Supply 16
4.3 Wiring Interconnecting Cable 17
4.3.1 General Wiring 19
4.3.2 Wiring Face Recognition Terminal (Optional) 20
4.4 Terminal Description 21
4.4.3 Master Control Board Terminal Description 21
4.4.4 Slave Control Board Terminal Description 21
4.4.5 Main Control Board Terminal Description 22
4.4.6 Main Control Board Serial Port ID Description 25
4.4.7 RS-485 Wiring 27
4.4.8 RS-232 Wiring 27
4.4.9 Wiegand Wiring 28
4.4.10 Barrier Control Wiring 29
4.4.11 Alarm Output Wiring 30
4.5 Wiring Lithium Battery (Optional) 30
Chapter 5 Device Settings 33
5.1 Setting Closed Position 33
5.2 Pairing Keyfob (Optional) 34
5.3 Initializing Device 34
5.4 Switching RS-485/RS-232 Mode 35
5.5 Switching Relay Output Mode (NO/NC) 35
5.5.1 Barrier Control Relay Output Mode 35
5.5.2 Alarm Relay Output Mode (NO/NC) 36
Chapter 6 Device Activation 37
6.1 Activating via SADP Software 37

6.2 Activating via Client Software 38
Chapter 7 Client Operation 41
7.1 Function Module 41
7.2 Access Control Management 41
7.2.1 Adding Access Control Device 42
7.2.2 Viewing Device Status 53
7.2.3 Editing Basic Information 54
7.2.4 RS-485 Settings 54
7.2.5 Authenticating M1 Card Encryption 55
7.2.6 Remote Configuration 56
7.3 Organization Management 65
7.3.1 Adding Organization 66
7.3.2 Modifying and Deleting Organization 66
7.4 Person Management 66
7.4.1 Adding Person 66
7.4.2 Managing Person 77
7.4.3 Issuing Card in Batch 78
7.5 Permission Configuration 79
7.5.1 Adding Permission 80
7.5.2 Applying Permission 81
7.6 Advanced Functions 82
7.6.1 Access Control Parameters 82
7.6.2 Card Reader Authentication 85
7.6.3 Multiple Authentication 87
7.6.4 Open Door with First Card 90
7.6.5 Anti-Passing Back 91
7.6.6 Cross-Controller Anti-passing Back 92
7.7 Searching Access Control Event 95
7.7.1 Searching Local Access Control Event 96
7.7.2 Searching Remote Access Control Event 96
7.8 Access Control Event Configuration 97
7.8.1 Access Control Event Linkage 97
7.8.2 Access Control Alarm Input Linkage 98
7.8.3 Event Card Linkage 99
7.8.4 Cross-Device Linkage 102
7.9 Door Status Management 103

7.9.1 Access Control Group Management 103
7.9.2 Anti-control the Access Control Point (Door) 105
7.9.3 Status Duration Configuration 106
7.9.4 Real-time Card Swiping Record 108
7.9.5 Real-time Access Control Alarm 108
7.10 Arming Control 109
7.11 Time and Attendance 110
7.11.1 Shift Schedule Management 111
7.11.2 Attendance Handling 117
Appendix A Tips for Scanning Fingerprint 120
Appendix B DIP Switch Description 121
DIP Switch Introduction 121
DIP Switch Corresponded Functions 121
Appendix C Table of Audio Index Related Content 122

Chapter 1 Overview

1.1 Introduction

The swing barrier with two barriers and 12 IR lights is designed to detect unauthorized entrance or exit. By adopting the swing barrier integrated with the access control system, person should authenticate to pass through the lane via swiping IC or ID card, scanning QR code, etc. It is widely used in attractions, stadiums, construction sites, residences, etc.

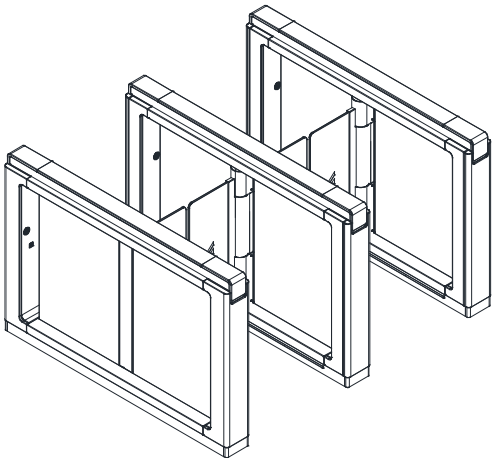

1.2 Main Features

- 32-bit high-speed processor
- TCP/IP network communication

  The communication data is specially encrypted to relieve the concern of privacy leak
- Permissions validation and anti-tailgating
- Remaining open/closed mode selectable
- Bidirectional (Entering/Exiting) lane

  The barrier opening and closing speed can be configured according to the visitors flow
- The barrier will be locked or stop working when people are nipped.
- Anti-forced-accessing

  The barrier will be locked automatically without open-barrier signal. It can bear the force of up to 120 Nm.
- Self-detection, Self-diagnostics, and automatic alarm
- Audible and visual alarm will be triggered when detecting intrusion, tailgating, reverse passing, climbing over barrier, and overstay.
- IP conflict detection
- Remote control and management
- Online/offline operation
- LED indicates the entrance/exit and light bar indicates passing status.

- Barrier is in free status when powered down; If the device is installed with lithium battery (optional), the barrier remains open when powered down
- Fire alarm passing

  When the fire alarm is triggered, the barrier will be open automatically for emergency evacuation.
- Valid passing duration settings

  System will cancel the passing permission if a person does not pass through the lane within the valid passing duration
- Opens/closes barrier according to the schedule template
- Adds up to 3000 visitor cards and up to 60,000 cards except for visitor cards
- Stores up to 180000 card swiping records
- Supports anti-passback of single lane and cross-controller anti-passback

Chapter 2Installation

2.1 Disassembling before Installation

Purpose:

Before installation, you should disassemble the pedestal and remove some screws.

Notes:

- Keep the disassembled components and screws organized.
- You should prepare the following tools to disassemble the pedestal: 1. Pedestal Key (supplied); 2. Allen Wrench (2.5 mm); 3. Allen Wrench (3 mm); 4. Allen Wrench (4 mm).

Steps:

1. Use the pedestal key to open the front and back components

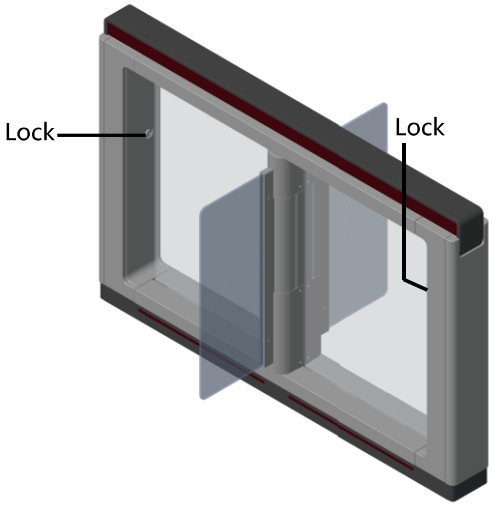

2. Use the Allen wretch (4 mm) to loosen the 2 screws (M5 × 25) at the top of the device.

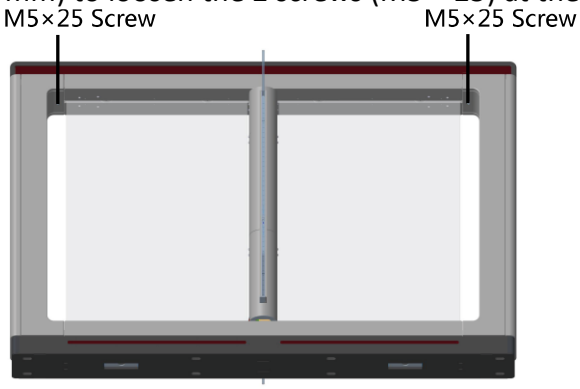

3. Remove the components along the arrow direction carefully.

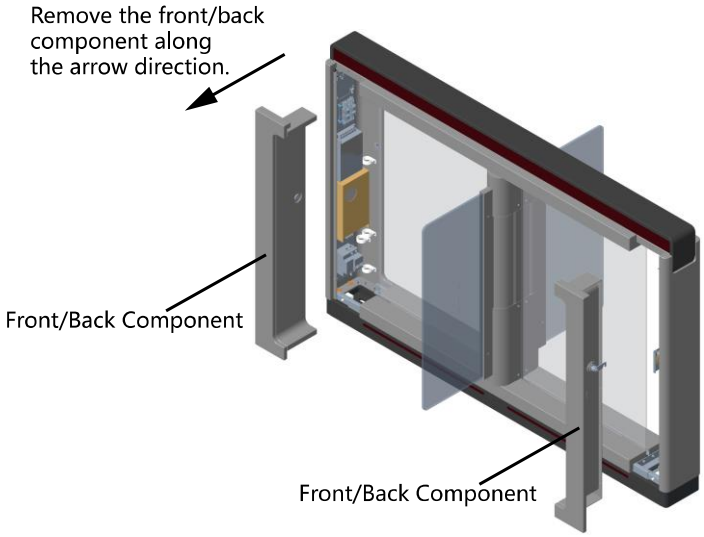

4. Loosen the wing bolt (M4 × 10) at the front and back of the pedestal, and remove the front and back base covers along the arrow direction.
   You can start installing the expansion screws to secure the device on the installation surface.

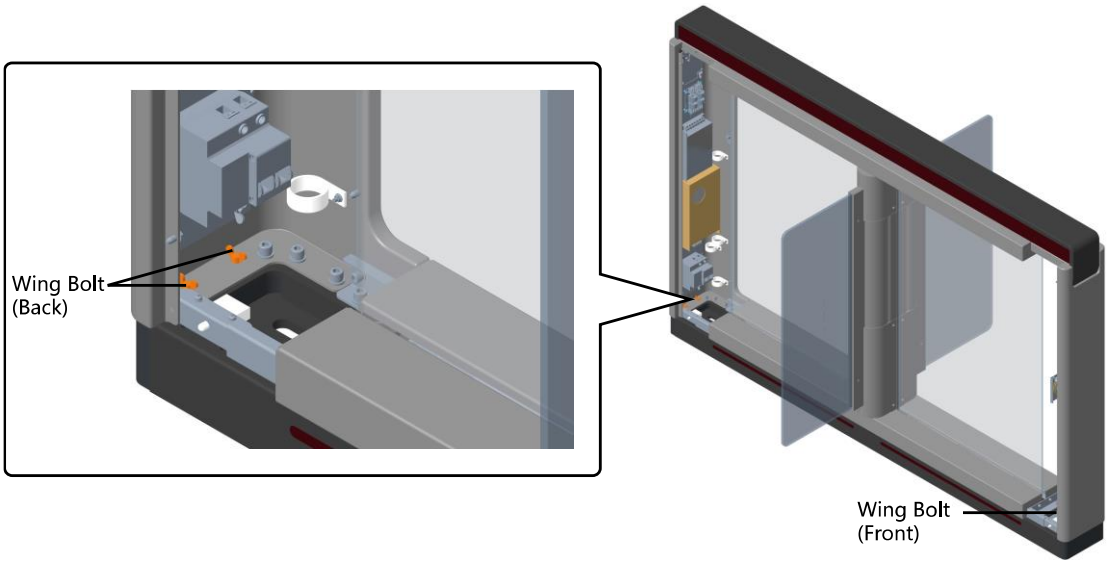

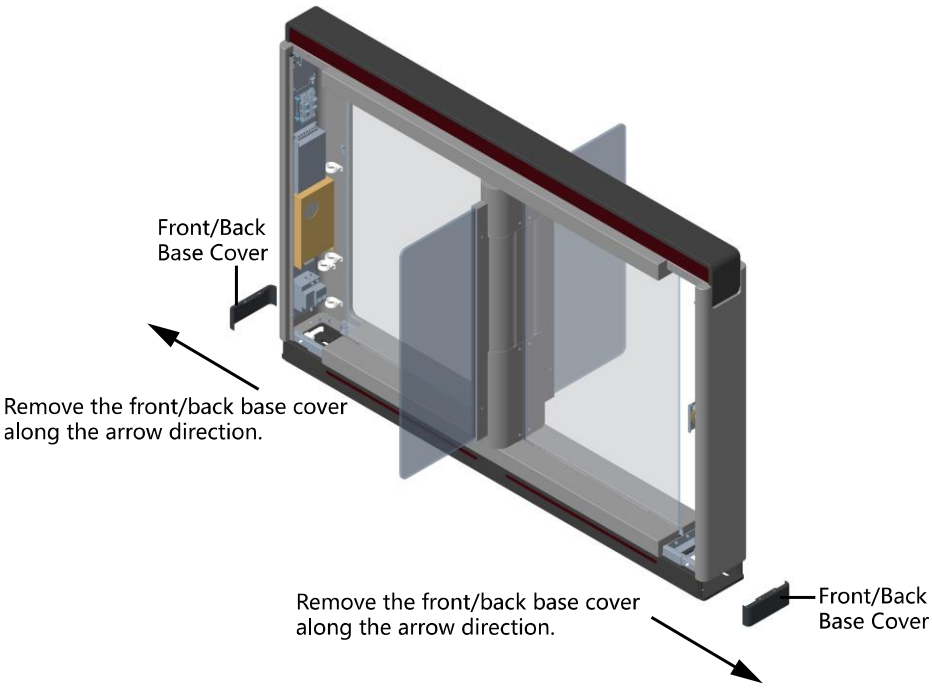

5. Remove the motor bottom cover.
   1) Pull or push the barrier to the closed position.
   2) Use the Allen wretch (2.5 mm) to loosen the 4 screws (M4 × 8) on the motor bottom cover.

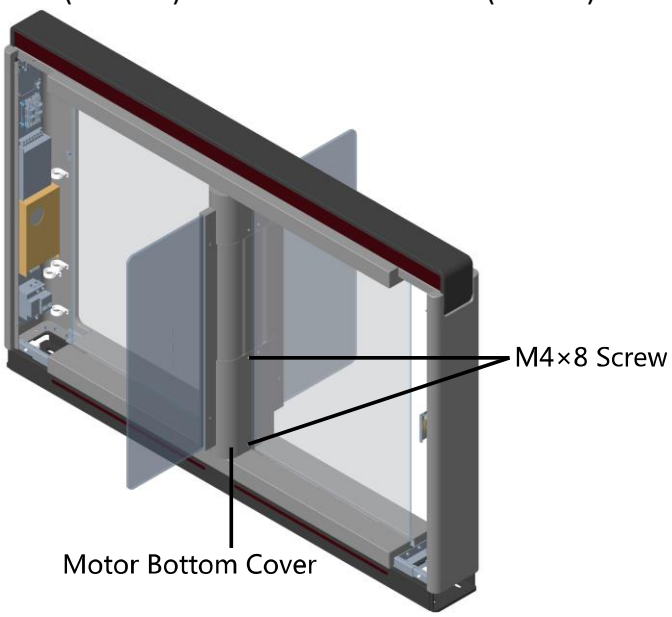

   3) Pull or push the barrier to the open position, and remove the motor bottom cover.

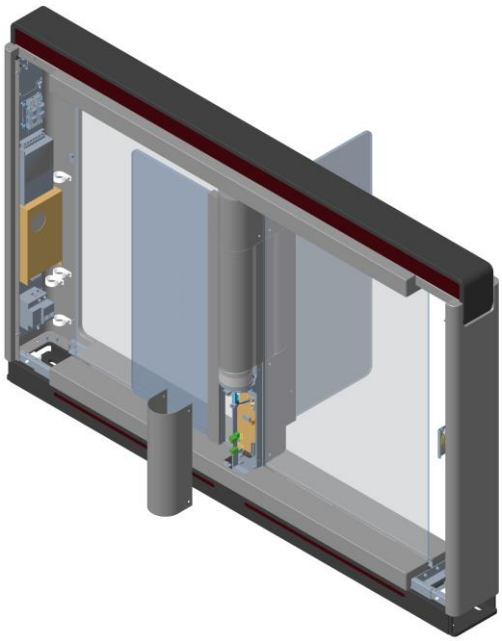

Note: If dissembling the middle pedestal, you should dissemble two motor bottom covers.

6. Use the Allen wretch (4 mm) to loosen the 2 screws (M5 × 12) at the front or back of the pedestal base and remove the side base cover slowly.

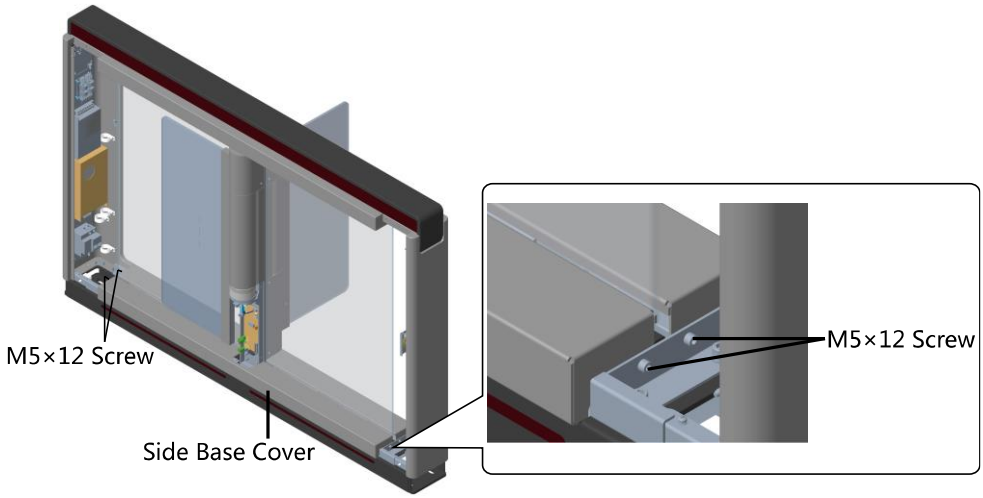

Note: If dissembling the middle pedestal, you should dissemble two side base covers.

7. Disassemble the two protective sheets at the bottom for wiring, and you can start wiring the interconnecting cable.

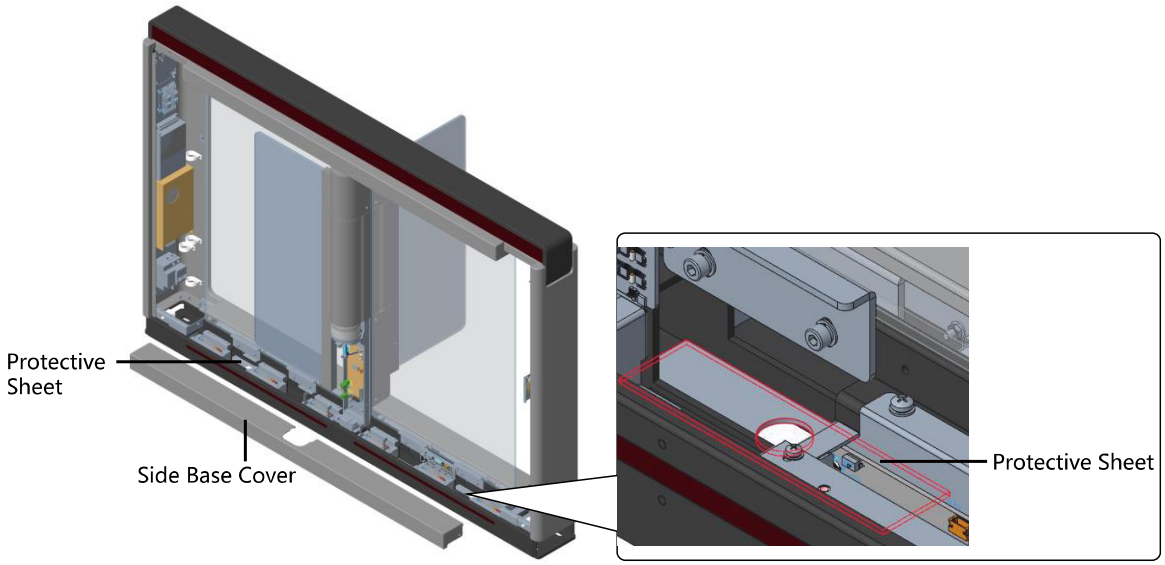

2.2 Installing Device

Before you start:

Prepare for the installation tools, check the device and the accessories, and clear the installation base.

Notes:

- SUITABLE FOR MOUNTING ON CONCRETE OR OTHER NON-COMBUSTIBLE SURFACE ONLY.
- In general, because of the limitation of installation and maintenance, the suggested distance between the wall and the pedestal is more than 50 mm.

Steps:

1. Draw a line on central installation surface of the left or right pedestal.
2. Draw another two parallel lines for installing the other two pedestals.
   Note: The distance between the nearest two line is L+100 mm. L represents the lane width.
3. Drill holes on the ground according to the installation holes on the pedestals and insert the expansion sleeves.
4. Bury interconnecting cables for pedestal communication.
   Note: For detailed information about burying and wiring interconnecting cables, see *4.3 Wiring Interconnecting Cable*.
5. According to the entrance and exit marks on the pedestals, move the pedestals to the corresponded positions.
   Note: Make sure the installation holes on the pedestals and the base are aligned with each other.
6. Secure the pedestals with expansion bolts.

   The installation footprint is as follows:

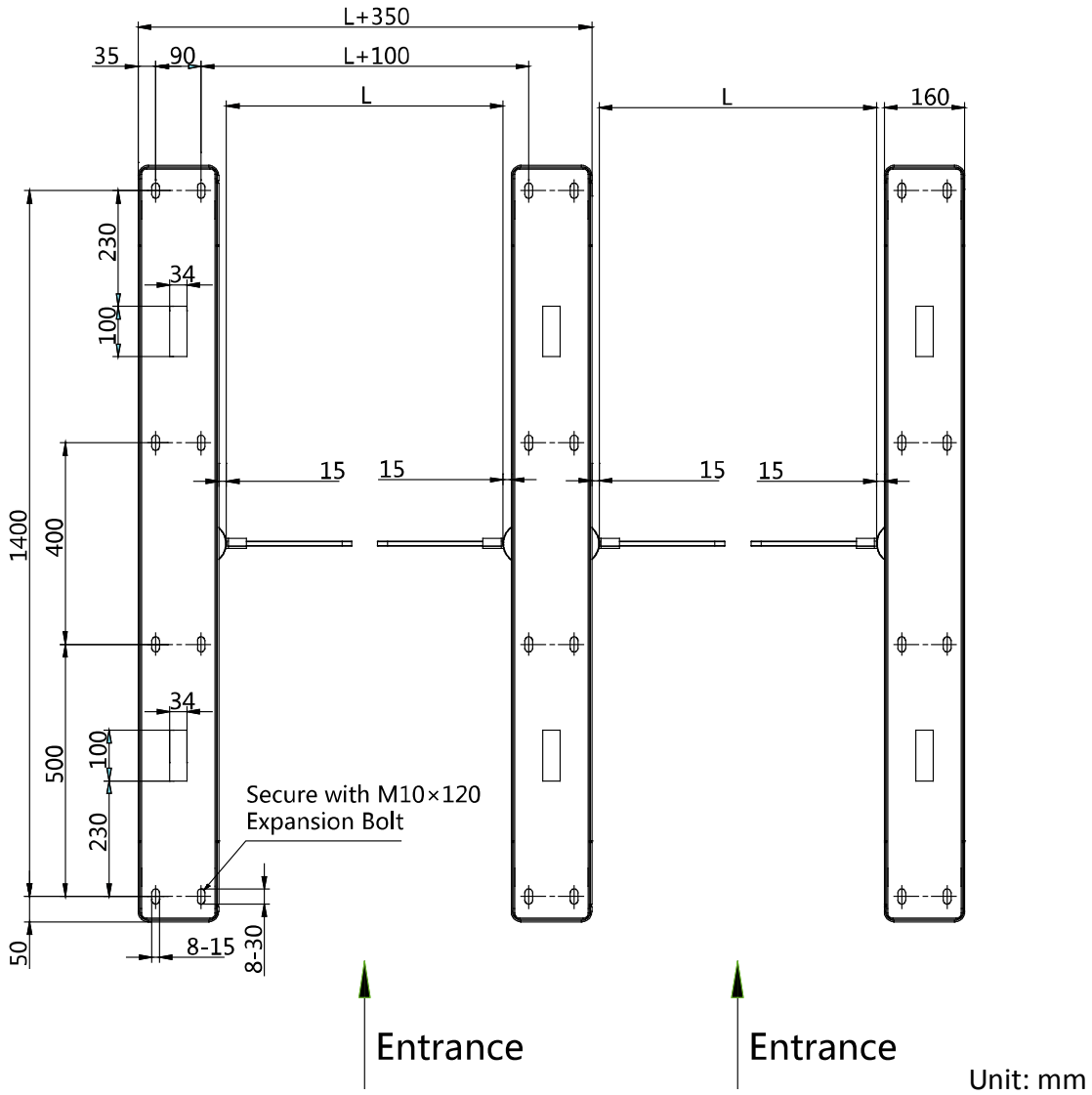

7. After installation, assemble the components and screws back to the pedestal in reverse order (except for protective sheets).

Chapter 3Disassembling before Maintenance

Purpose:

Before maintaining the inner components, you should disassemble the pedestal and remove some screws.

Notes:

- Keep the disassembled components and screws organized.
- You should prepare the following tools to disassemble the pedestal: 1. Pedestal Key (supplied); 2. Allen Wrench (2.5 mm); 3. Allen Wrench (3 mm); 4. Allen Wrench (4 mm).

Disassembling Front and Back Components

Purpose:

After disassembling the front and back components, you can maintain the front and back parts of the pedestal.

Steps:

1. Use the pedestal key to open the front and back components.

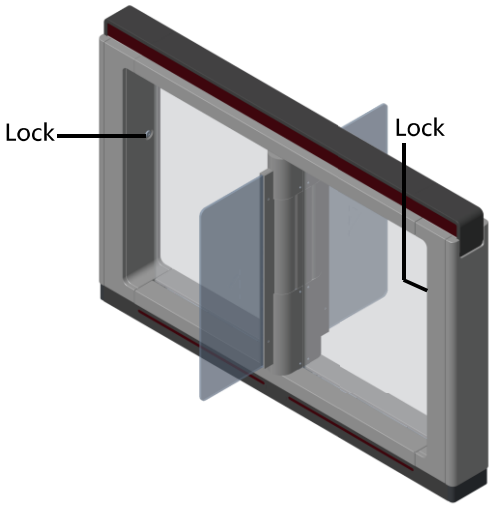

2. Use the Allen wretch (4 mm) to loosen the 2 screws (M5 × 25) at the top of the device.

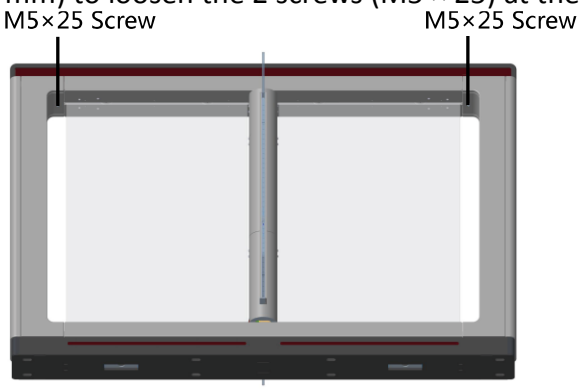

3. Remove the components along the arrow direction carefully.

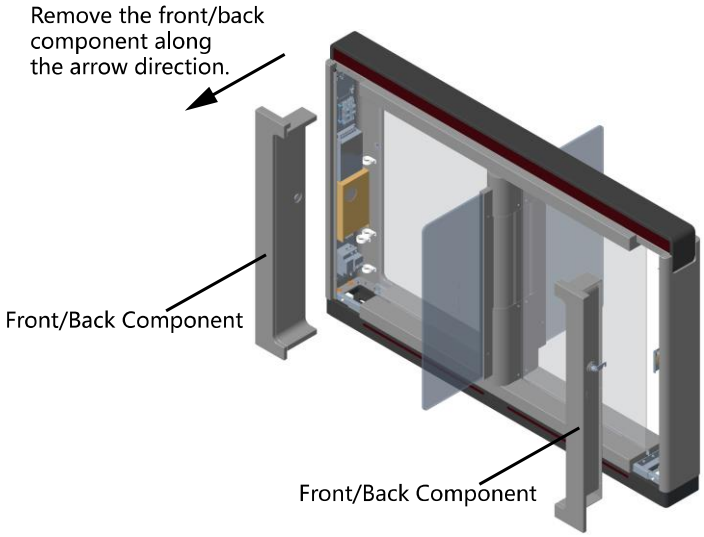

Disassembling Motor Bottom Cover

Purpose:

After disassembling the motor bottom cover, you can maintain the lane control board and the barrier position control board.

Steps:

1. Pull or push the barrier to the closed position.
2. Use the Allen wretch (2.5 mm) to loosen the 4 screws (M4 × 8) on the motor bottom cover.

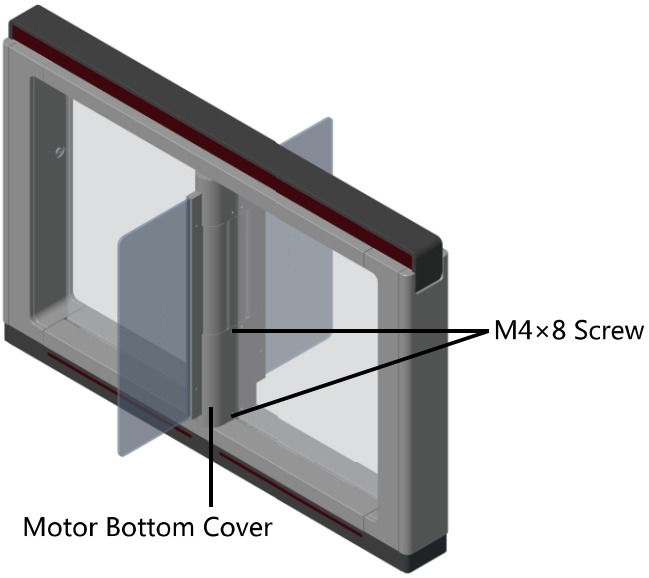

3. Pull or push the barrier to the open position, and remove the motor bottom cover.

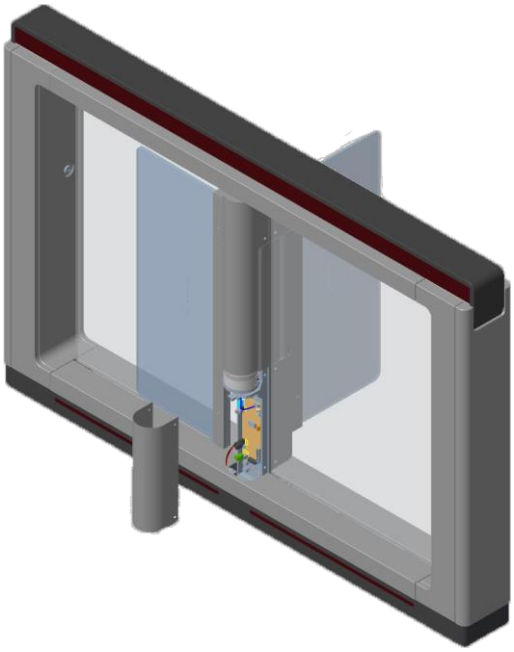

Note: If dissembling the middle pedestal, you should dissemble two motor bottom covers.

Disassembling Side Base Cover

Purpose:

After disassembling the side base cover, you can maintain the IR sending/receiving board.

Steps:

1. Use the pedestal key to open the front and back components.

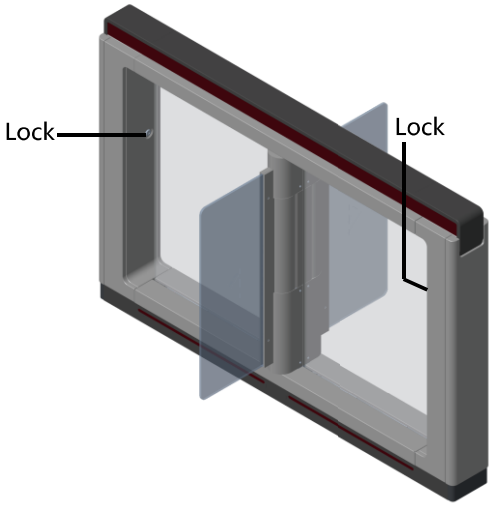

2. Use the Allen wretch (4 mm) to loosen the 2 screws (M5 × 25) at the top of the device.

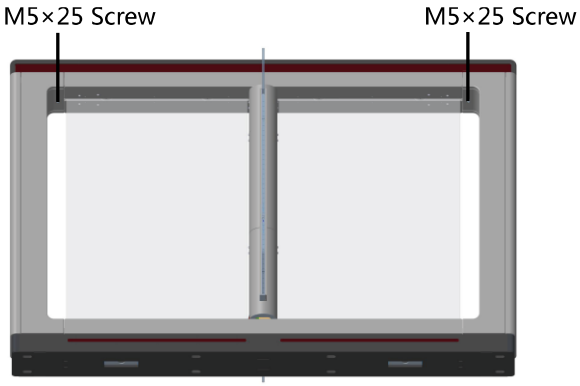

3. Remove the components along the arrow direction carefully.

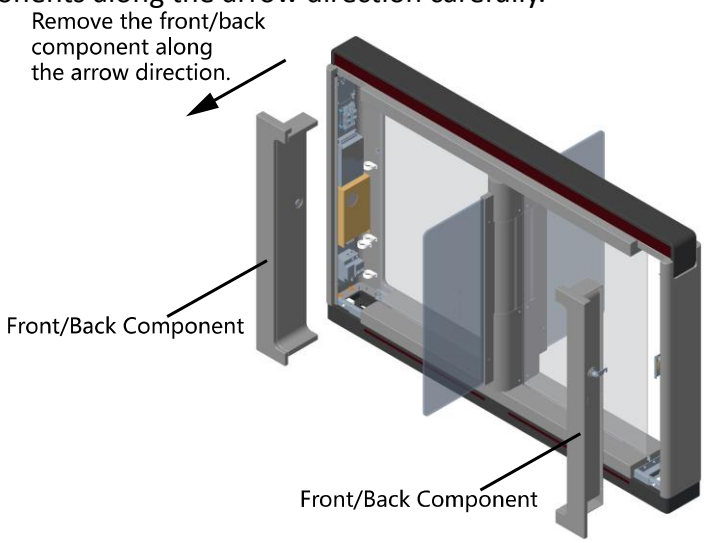

4. Use the Allen wretch (4 mm) to loosen the 2 screws (M5 × 12) at the front or back of the pedestal base and remove the side base cover slowly.

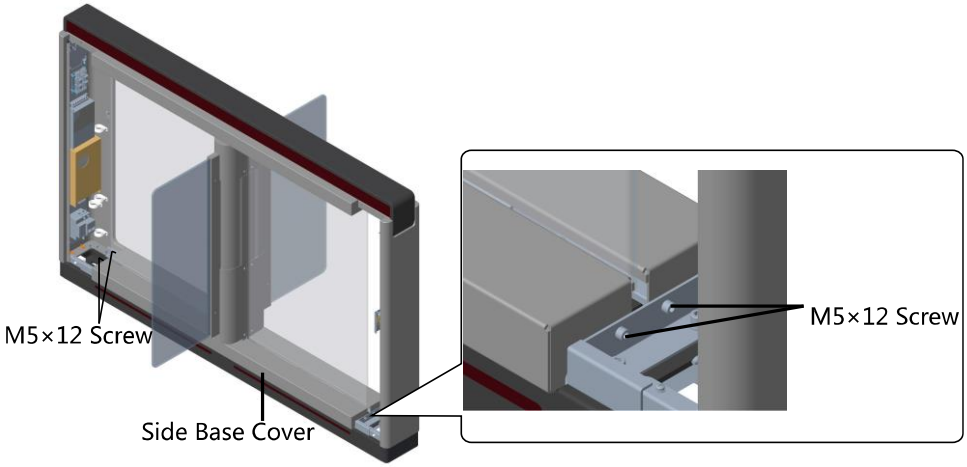

Note: If dissembling the middle pedestal, you should dissemble two side base covers.

Disassembling Top Cover

Purpose:

After disassembling the top cover, you can maintain the components at the top of the pedestal, the IR sending/receiving board and the IR adaptor for instance.

Steps:

1. Use the Allen wretch (2.5 mm) to loosen the 4 captive panel screws at the top of the pedestal.

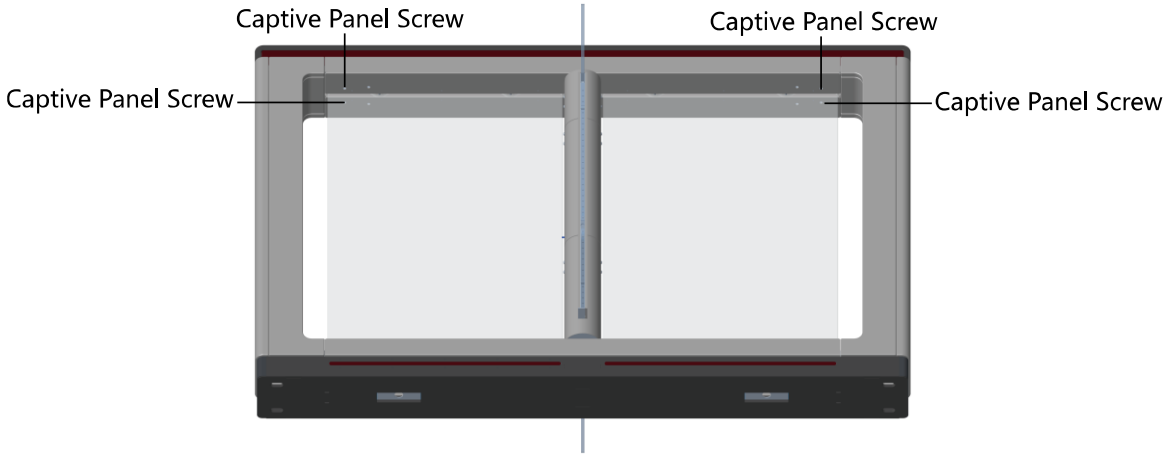

2. Move the front and back top covers along the arrow 1's direction for about 3 cm, and move them upwards to remove the front and back top covers.

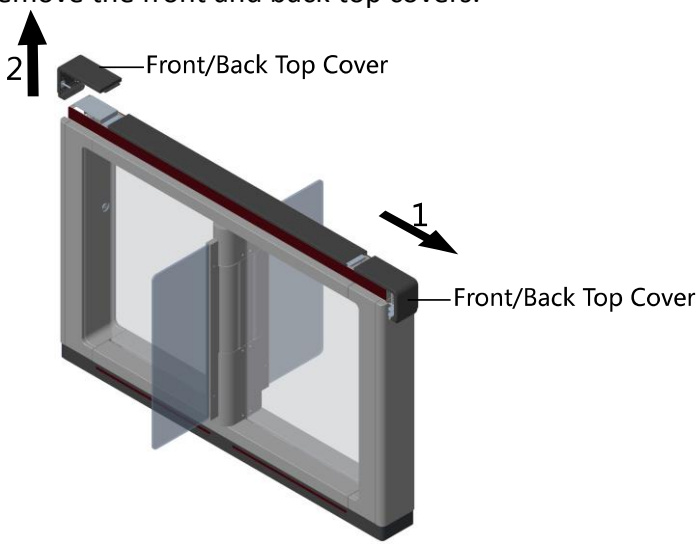

3. (Optional) If you should install the fingerprint modules in the pedestal, you should use the key to open and remove the front and back components, and cut off the fingerprint modules' power.
4. Use the Allen wrench (2.5 mm) to loosen the 2 captive panel screws displayed in the picture below.

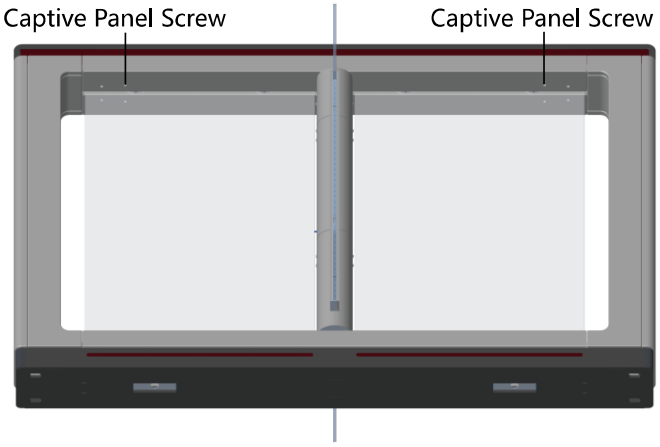

5. Remove the top cover along the arrow's direction.

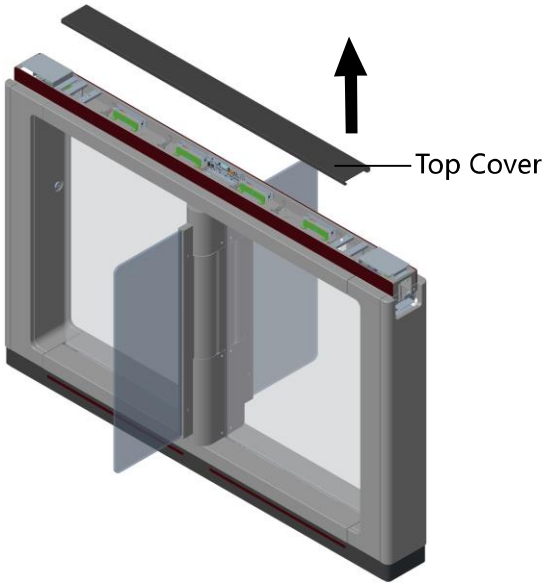
Top Cover

Chapter 4Wiring

4.1 Components Introduction

Purpose:

By default, basic components of the swing barrier are connected well. The pedestals can realize communications between pedestals by the wirings of the interconnecting cables. And the swing barrier should wire to the AC electric supply for the whole system's power supply.

Note: The voltage fluctuation of the electric supply is between 100 VAC and 220 VAC, 50 to 60 Hz.

The picture displayed below describes each component's position on the swing barrier.

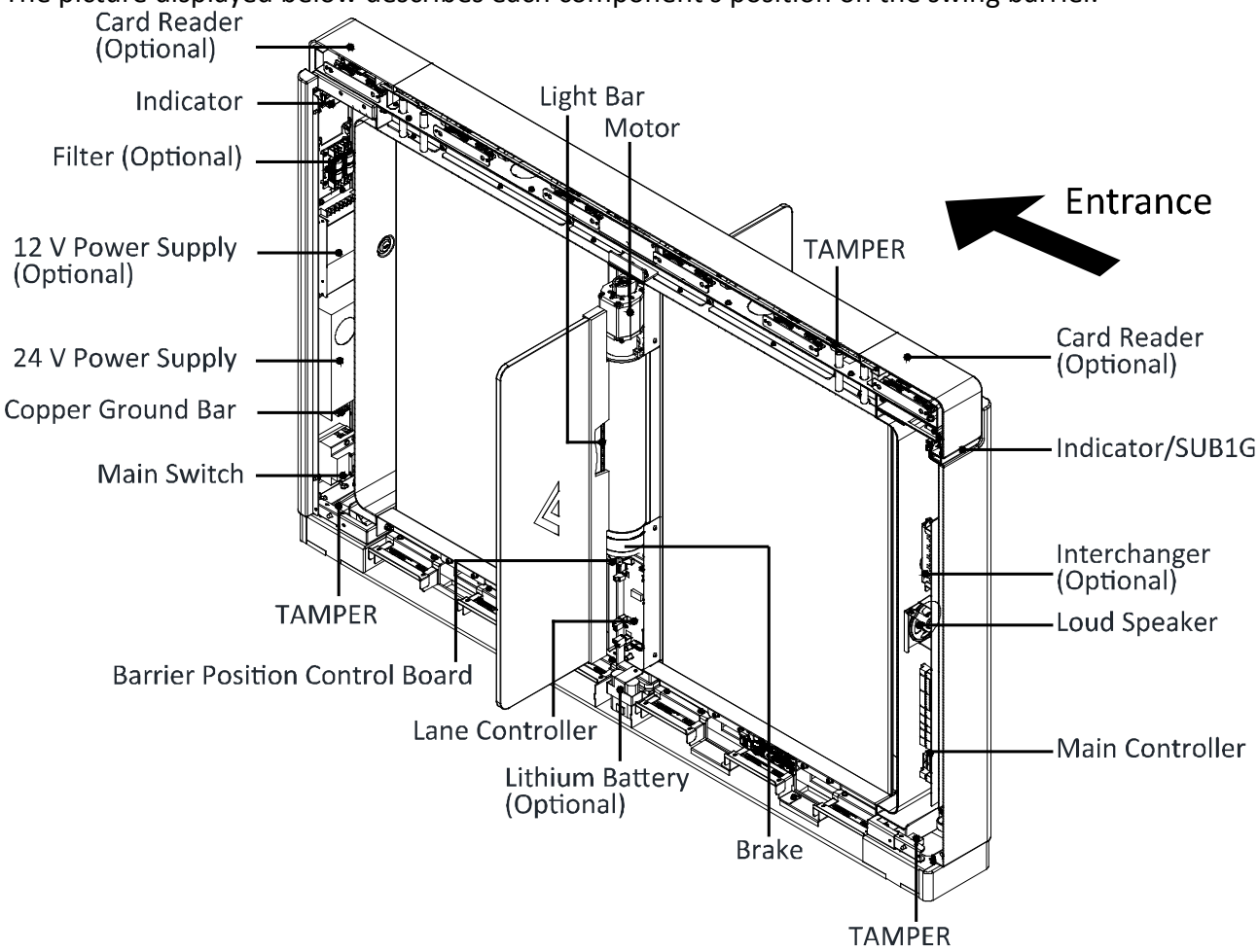

The positions of IR adaptor and IR sending/receiving board are as follows:

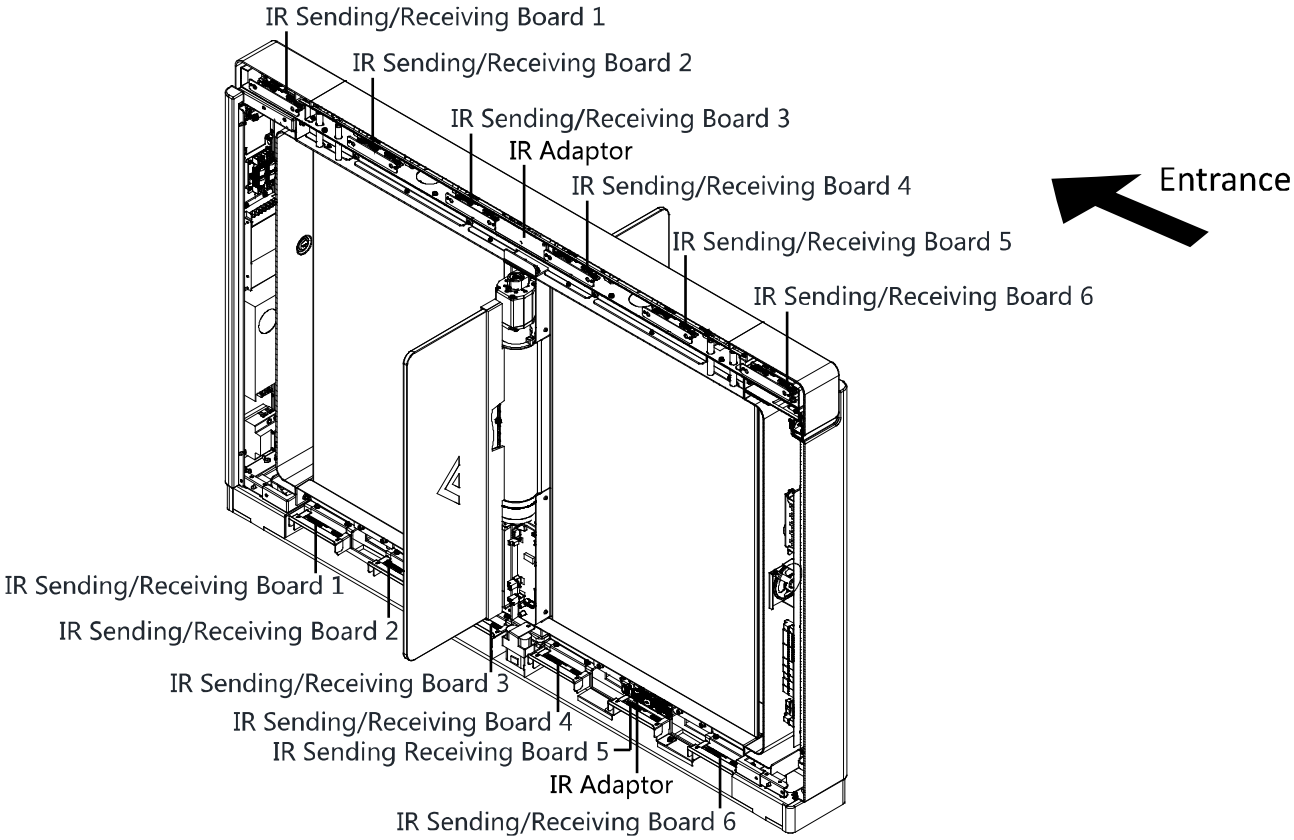

Note: When you stand at the entrance, the IR sending boards are in the left pedestal and the right side of the middle pedestal, the IR receiving boards are in the right pedestal and the left side of the middle pedestal.

4.2 Wiring Electric Supply

Wire electric supply with the switch in the pedestal. Terminal L and terminal N are on the main switch, while terminal PE should connect to a ground wire (yellow and green wire).

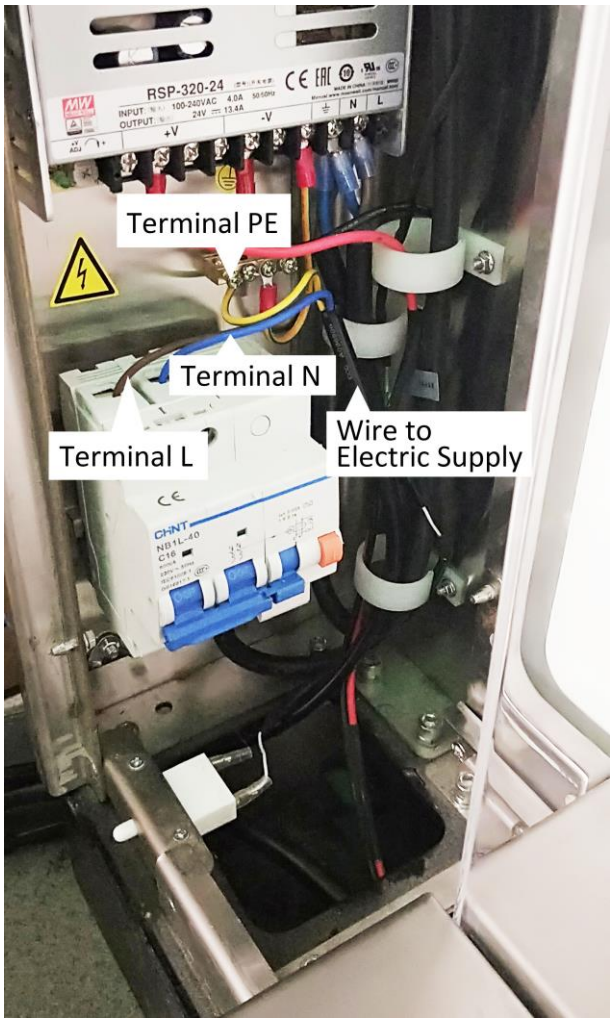

Notes:

- The cable bare part should be no more than 8 mm. It is suggested that you can immerse the bare part into the liquid tin. If possible, ware an insulation cap at the end of the bare cable. Make sure there's no bare copper or cable after the wiring.
- The Terminal L and the Terminal N cannot be wired reversely.
- Do not wire the input and output terminal reversely.

4.3 Wiring Interconnecting Cable

Purpose:

You should use interconnecting cables to connect the master lane board and the slave lane board for components communication.

The picture displayed below describes the cable hole's position on the pedestals.

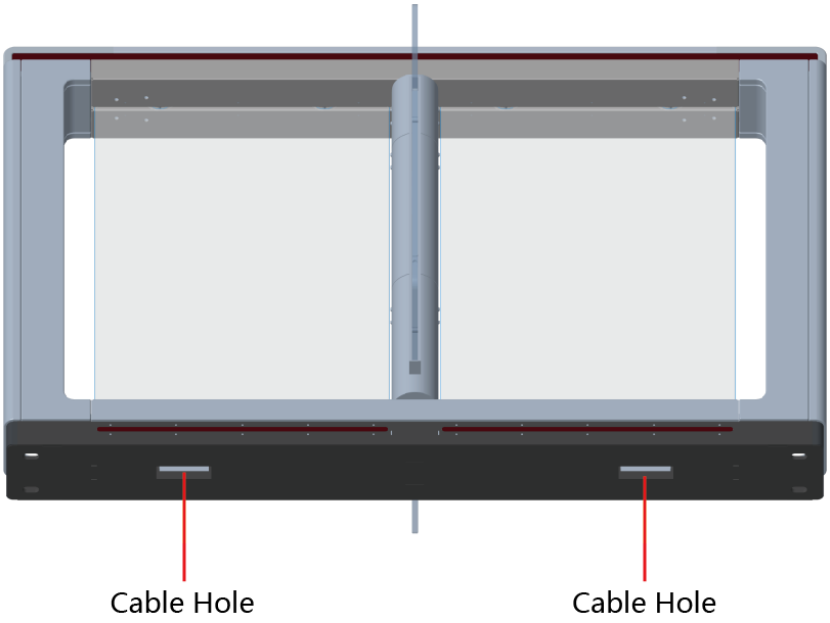
Cable Hole
Cable Hole

4.3.1 General Wiring

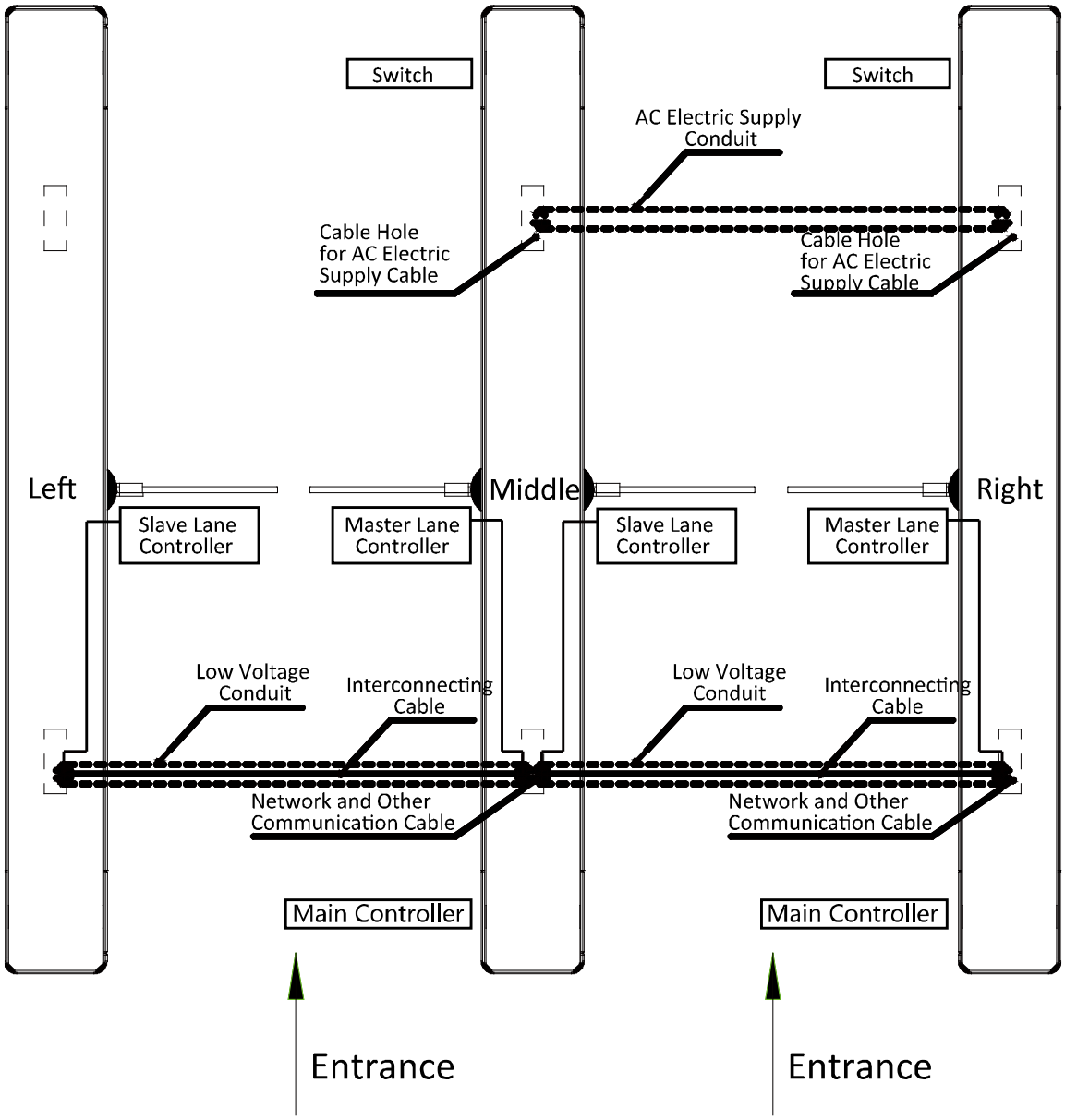

Notes:

- The supplied interconnecting cable length is 3.75 m. If you need a longer one, ask our technique supports or sales and purchase 5.5 m interconnecting cables.
- If you want to bury both of the AC power cord and the low voltage cable at the same side, the two cables should be in separated conduits to avoid interference.
- If more peripherals are required to connect, you should increase the conduit diameter or bury another conduit for the external cable.
- The external AC power cord should be double-insulated.
- The suggested network cable should be CAT5e or the network cable has better performance. And the suggested network cable length should be less than 100 m. If the communication length is more than 100 m, it is suggested to use optical fiber.

4.3.2 Wiring Face Recognition Terminal (Optional)

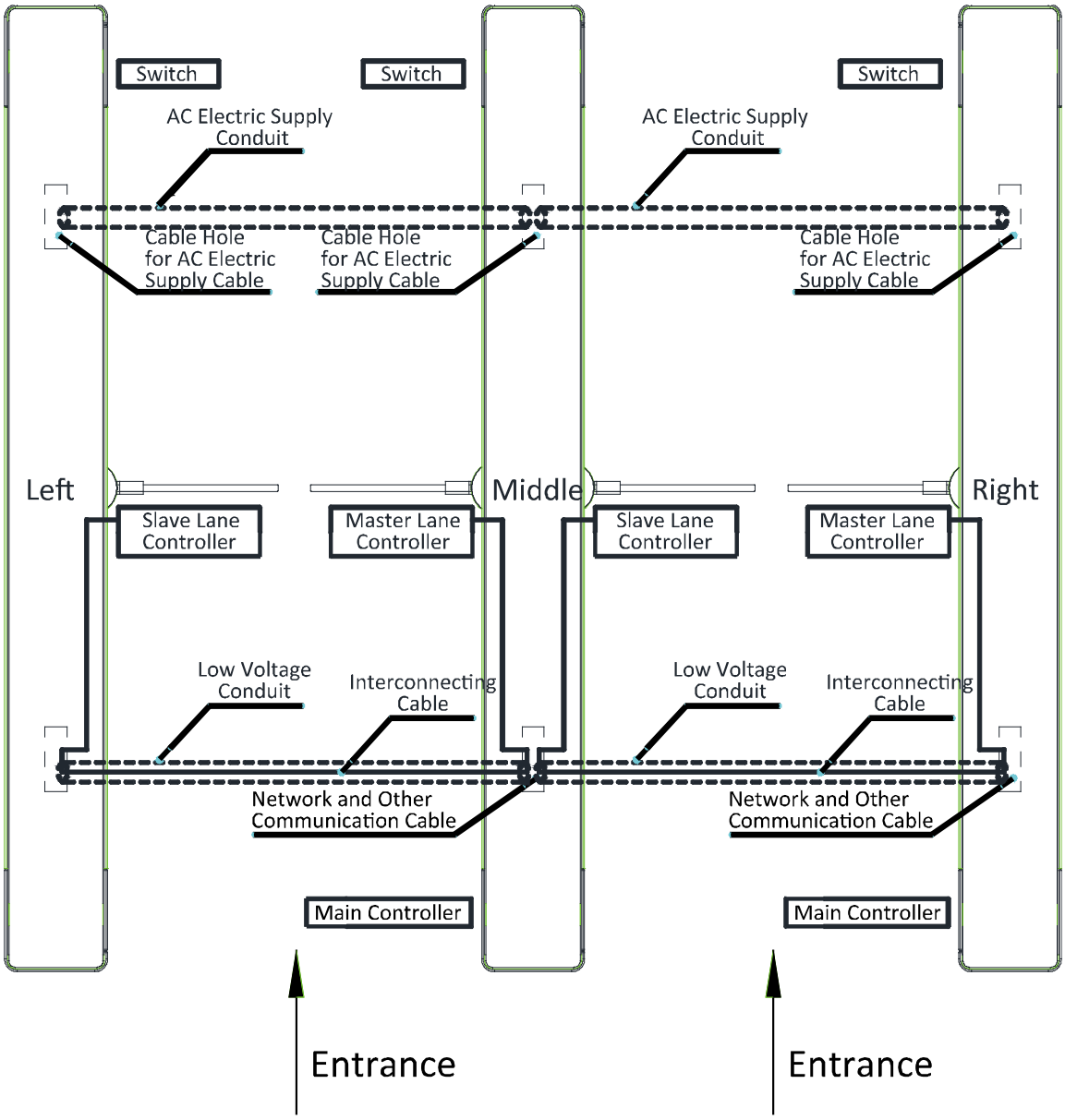

Notes:

- The supplied interconnecting cable length is 3.75 m. If you need a longer one, ask our technique supports or sales and purchase 5.5 m interconnecting cables.
- The suggested inner diameters of the low voltage conduit should be larger than 30 mm.
- If you want to bury both of the AC power cord and the low voltage cable at the entrance side, the two cables should be in separated conduits to avoid interference.
- If more peripherals are required to connect, you should increase the conduit diameter or bury another conduit for the external cable.
- The external AC power cord should be double-insulated.
- The suggested network cable should be CAT5e or the network cable has better performance. And the suggested network cable length should be less than 100 m. If the communication length is more than 100 m, it is suggested to use optical fiber.

4.4 Terminal Description

Purpose:

The lane controller contains master lane controller and slave lane controller, which controls the IR beams, motor, and other components work.

4.4.3 Master Control Board Terminal Description

Purpose:

The master lane control board contains power supply interface, battery interface, motor drive interface, strip light interface, motor encoder interface, door open position detection interface, debug port, lane communication interface, interconnecting interface, and DIP switch.

The picture displayed below is the master control board diagram.

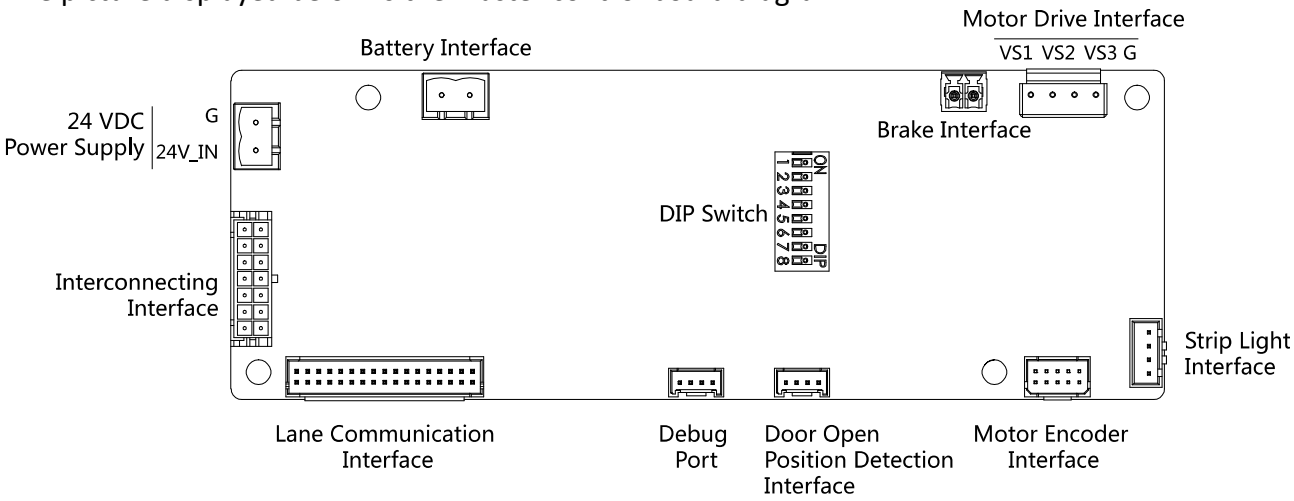

4.4.4 Slave Control Board Terminal Description

Purpose:

The slave lane control board contains power supply interface, battery interface, motor drive interface, strip light interface, motor encoder interface, door open position detection interface, debug port, lane communication interface, and interconnecting interface.

Note: The master control board contains a DIP switch, while the slave control board not.

The picture displayed below is the slave control board diagram.

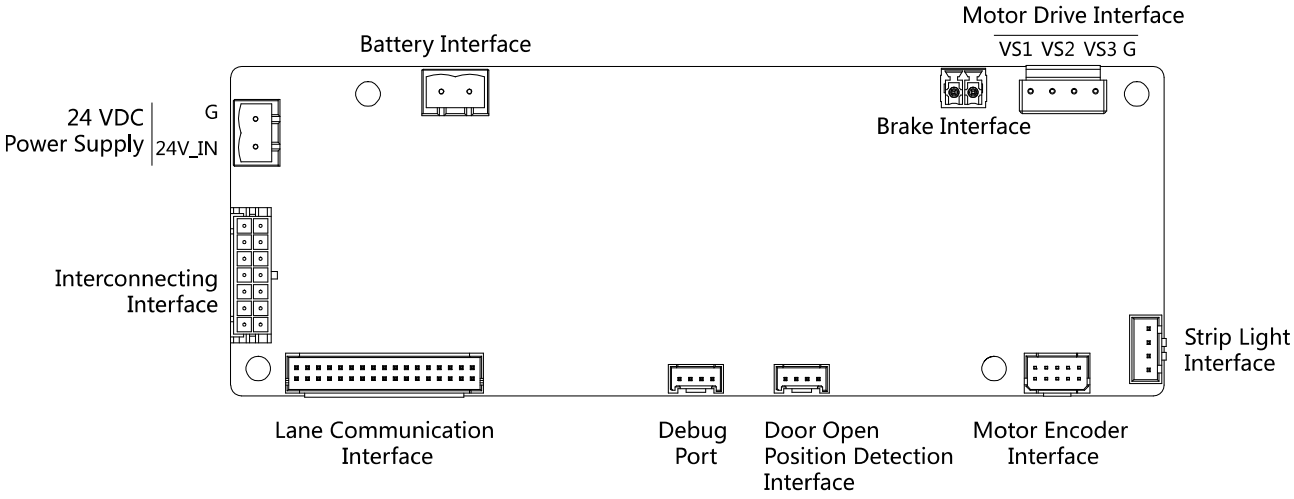

4.4.5 Main Control Board Terminal Description

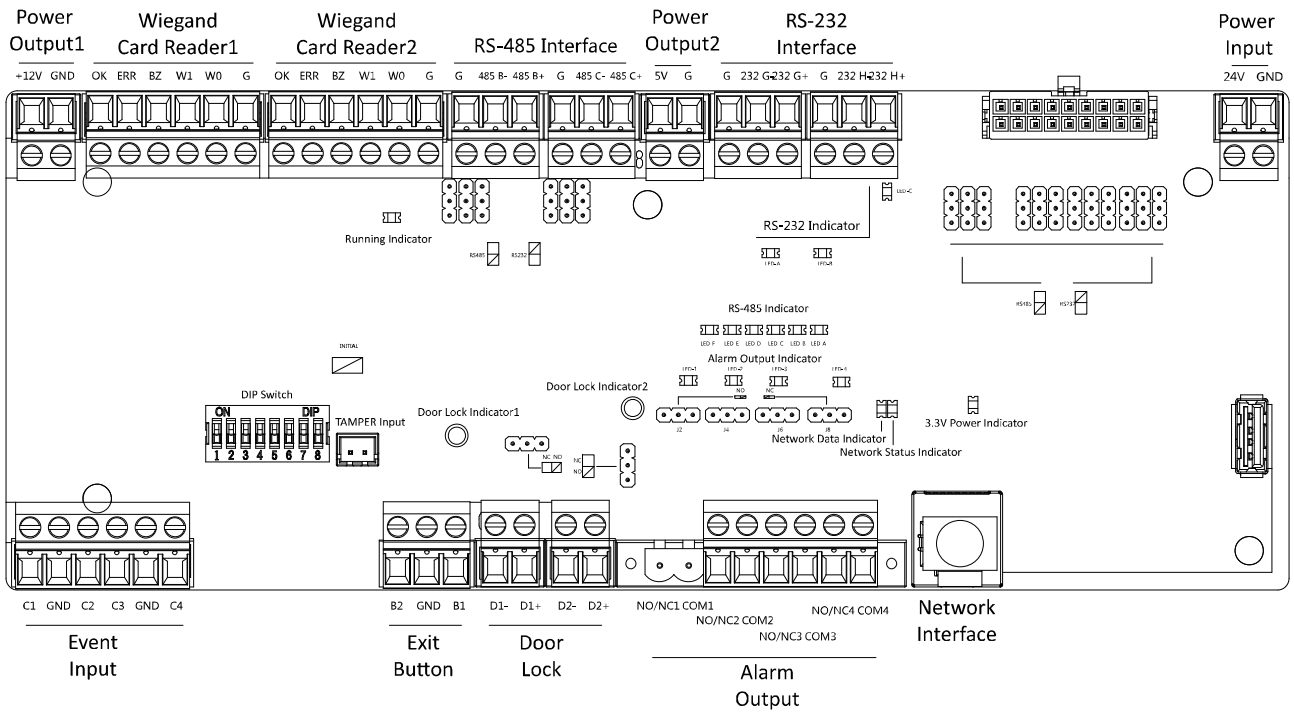

Table 4-1 Main Control Board Terminal Description

Main Controlling Board Terminal Description		
Power Output1	+12V	Grounding
	GND	Power Output
Wiegand Card Reader1	OK	Indicator of Card Reader Control Output (Invalid Card Output)
	ERR	Indicator of Card Reader Control Output (Valid Card Output)
	BZ	Card Reader Buzzer Control Output
	W1	Wiegand Head Read Data Input Data1
	W0	Wiegand Head Read Data Input Data0
	GND	Grounding
Wiegand Card Reader 2	OK	Indicator of Card Reader Control Output (Invalid Card Output)
	ERR	Indicator of Card Reader Control Output (Valid Card Output)
	BZ	Card Reader Buzzer Control Output
	W1	Wiegand Head Read Data Input Data1
	W0	Wiegand Head Read Data Input Data0
	GND	Grounding
RS-485 Interface	GND	Grounding
	RS-485 B-	Connect to Card Reader RS485-
	RS-485 B+	Connect to Card Reader RS485+
	GND	Grounding
	RS-485 C-	Connect to Card Reader RS485-
	RS-485 C+	Connect to Card Reader RS485+
Power Output2	5V	5 VDC Power Output
	GND	5 VDC Grounding
RS-232 Interface	GND	Grounding
	RS-232 G-	Connect to Card Reader RS232-
	RS-232 G+	Connect to Card Reader RS232+
	GND	Grounding
	RS-232 H-	Connect to Card Reader RS232-
	RS-232 H+	Connect to Card Reader RS232+
Power Input	+12V	12 VDC Power Input
	GND	12 VDC Grounding
Event Input	C1	Event Input
	GND	Grounding
	C2	Fire Input
	C3	People Counting (Entrance)

Main Controlling Board Terminal Description		
	GND	Grounding
	C4	People Counting (Exit)
Exit Button	B2	Door 2 Signal Input
	GND	Grounding
	B1	Door 1 Signal Input
Door Lock (Relay)	D1-	Door 1 Relay Output(Dry Contact)
	D1+	
	D2-	Door 2 Relay Output(Dry Contact)
	D2+	
Alarm Output	NO/NC1	Alarm Output Relay 1(Dry Contact)
	COM1	
	NO/NC2	Alarm Output Relay 2(Dry Contact)
	COM2	
	NO/NC3	Alarm Output Relay 3(Dry Contact)
	COM3	
	NO/NC4	Alarm Output Relay 4(Dry Contact)
	COM4	
Network Interface	LAN	Network Accessing

Notes:

- The alarm input hardware interface is normally open by default. So only the normally open signal is allowed. It can be linked to the buzzer of the card reader and access controller, and the alarm relay output, open door relay output, and fire alarm output.
- The DIP of RS485 card ID is set as 1 and 4 by default. 1 is for entering, and 4 is for exiting. Set the DIP as 3 for connecting visitor card reader.
- The Wiegand card reader 1 and 2 respectively refer to the entering and exiting card reader.
- The alarm output supports relay output.
- For any requirements, the door lock can control the door barrier status of the third party. D1 controls the barrier opening for entrance, while D2 controls the door opening for exit. For details, see *5.5.1 Barrier Control Relay Output Mode*.
- C3 and C4 in the event input is people counting interface. C3 controls people counting for entrance, while C4 controls people counting for exit. When the main control board detects signals in C3 and C4, the people number will be accumulated. For detailed information about people counting and people number, see *Configuring People Counting Parameters* in *7.2.6 Remote Configuration*.
- For detailed information about the DIP switch, see *Appendix B DIP Switch Description*.

4.4.6 Main Control Board Serial Port ID Description

Purpose:

You can use the jumper cap on the main control board to switch the interface communication mode. For details about switching between RS-232 and RS-485 communication type, see *5.4 Switching RS-485/RS-232 Mode*.

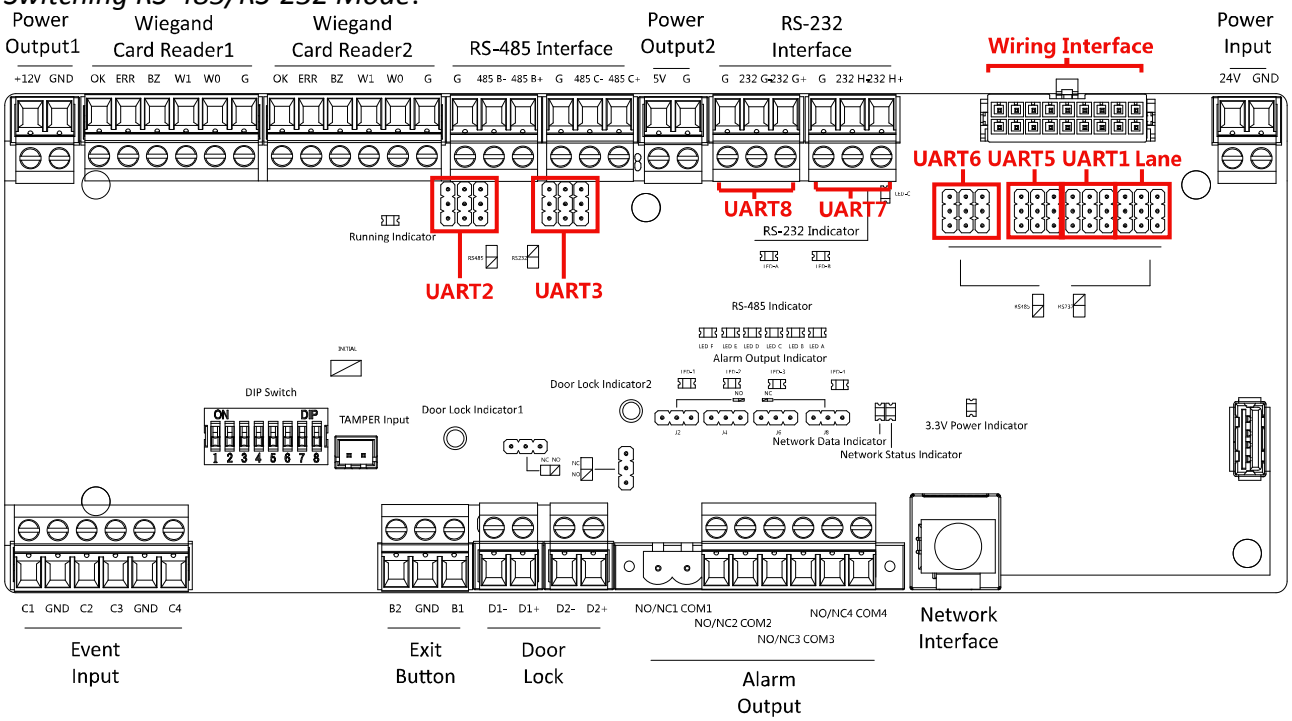

According to the picture above, the RS-485 serial port corresponds to UART2 and UART3. RS-232 serial port is corresponded to UART7 and UART8. Wiring Interface is corresponded to UART1, UART4, UART6, UART6, and Lane.

The main control board descriptions are as follows:

UART2/UART3 Jumper Cap: Reserved serial port. Use the jumper cap to switch the serial port communication mode. You can switch between the RS-485 communication mode and the RS-232 communication mode. By default, it is in RS-485 communication mode.

UART6 Jumper Cap: Use the jumper cap to switch the serial port communication mode with the slave lane controller. You can switch between the RS-232 communication mode and the RS-485 communication mode. By default, it is in RS-232 communication mode.

UART5 Jumper Cap: Use the jumper cap to switch the serial port communication mode with the slave lane controller. You can switch between the RS-484 communication mode and the RS-232 communication mode. By default, it is in RS-485 communication mode.

UART1 Jumper Cap:	Use the jumper cap to switch the serial port communication mode with the master lane controller. You can switch between the RS-484 communication mode and the RS-232 communication mode. By default, it is in RS-485 communication mode.
Lane:	Use the jumper cap to switch the serial port communication mode with the lane controller. By default, the interface is wired and it is in RS-485 communication mode. If wiring other controllers (compatible with Hikvision communication protocol), use the jumper cap to switch between RS-485 and RS-232 communication mode.
UART4:	The serial port is in the wiring interface according to the picture above, which has a fixed RS-232 communication mode to communicate with the master lane controller. It contains no jumper cap and cannot change the communication mode.
UART7/UART8:	Reserved serial port. The serial port has a fixed RS-232 communication mode. It contains no jumper cap and cannot change the communication mode. It can connect QR code scanner, card recycler, and text screen.

The reserved interface positions in the swing barrier and their corresponded UART No. are as follows:

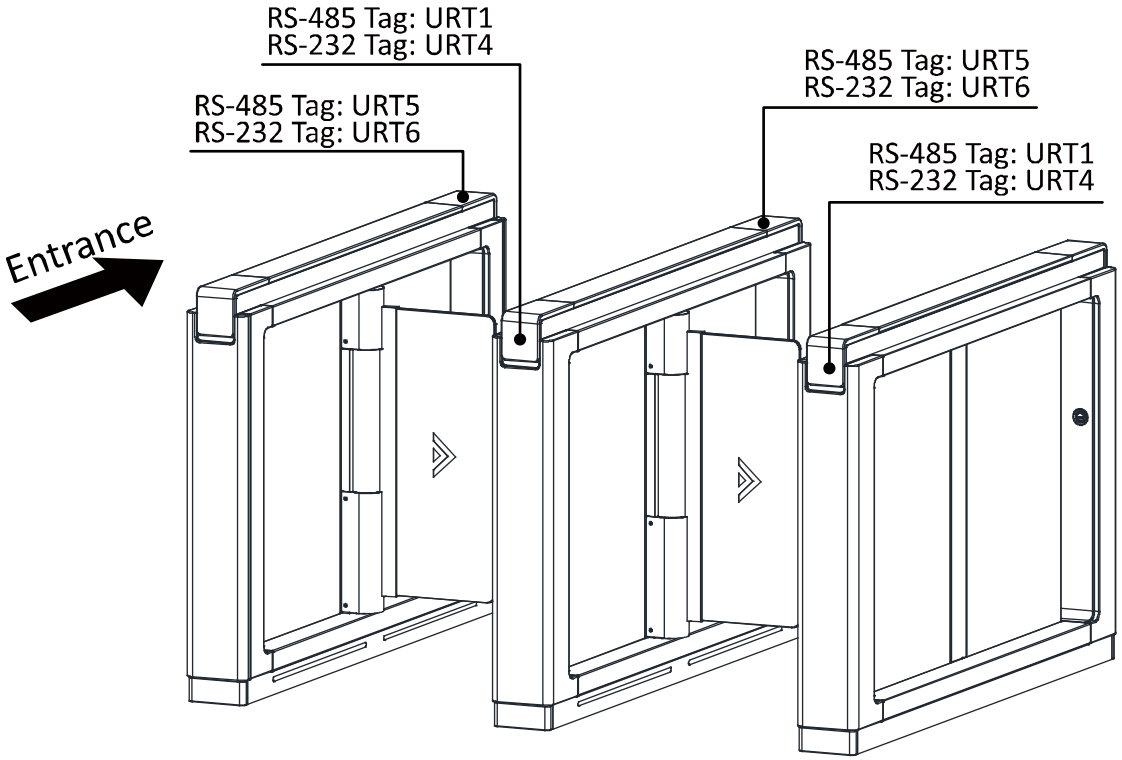

4.4.7 RS-485 Wiring

Notes:

- There are five RS-485 interfaces, which are for connecting ID card reader, IC card reader, QR code scanner, fingerprint and card reader, card recycler, text screen, fingerprint reader, and face recognition terminal. Take the wiring of RS-485 card reader as an example.
- For details about text screen, see *Configuring Screen Parameters* in *7.2.6 Remote Configuration*.

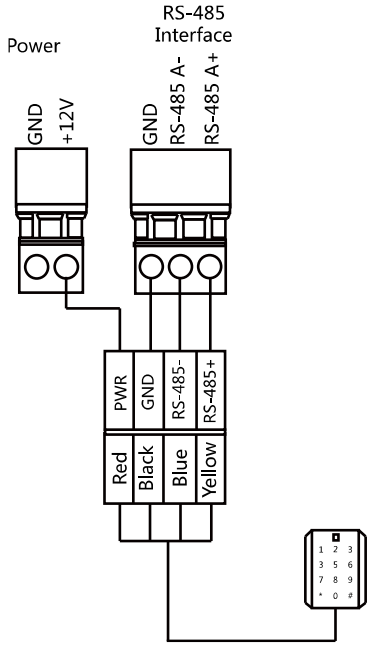

4.4.8 RS-232 Wiring

Note: There are three RS-232 interfaces (UART4, UART7, and UART8). UART7 and UART8 can connect QR code scanner, card recycler, and text screen, while UART4 can connect QR code scanner, card recycler, text screen, and face recognition terminal. For details about text screen, see *Configuring Screen Parameters* in *7.2.6 Remote Configuration*.
Take the wiring of face recognition terminal as an example.

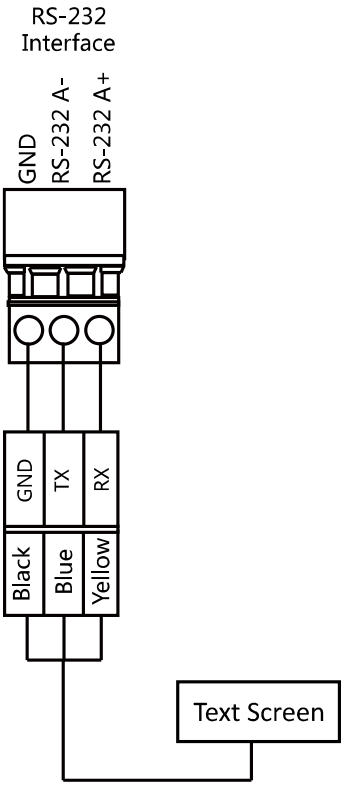

4.4.9 Wiegand Wiring

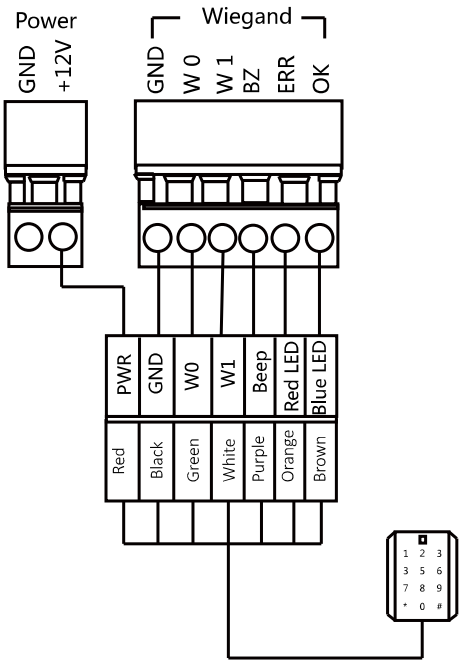

Note: You must connect the OK/ERR/BZ if using access controller to control the LED and buzzer of the Wiegand card reader.

4.4.10 Barrier Control Wiring

Purpose:

By default, the barrier has connected with the main control board. The lane control board can control the barrier status. If possible, the device can connect with a third party lane control board to control the third party barriers. Interface D1 controls barrier opening for entrance, while interface D2 controls barrier opening for exit.

Entering Wiring

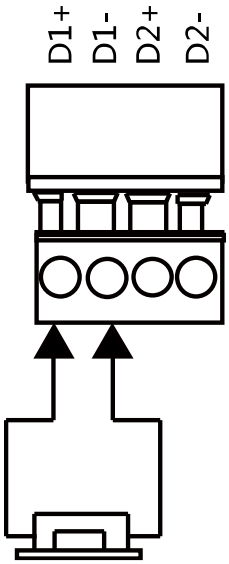

Exiting Wiring

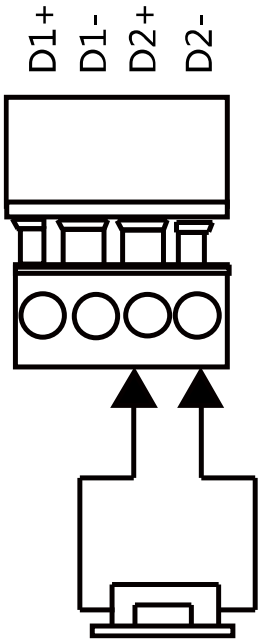

4.4.11 Alarm Output Wiring

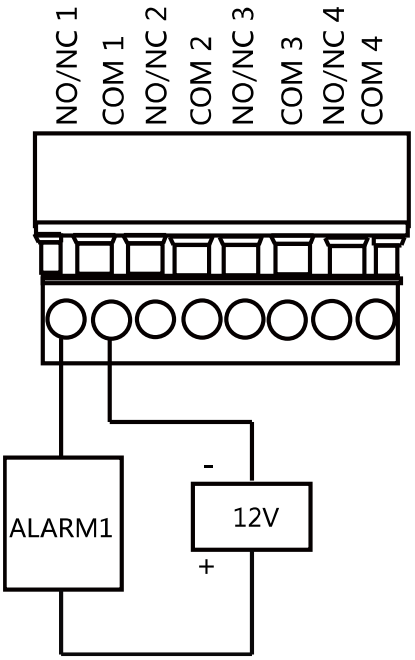

Note: For details about changing the relay output status via the jumper cap, see *5.5.2 Alarm Relay Output Mode (NO/NC)*.

4.5 Wiring Lithium Battery (Optional)

Purpose:

The lithium battery supplies power for master lane control board and slave lane control board when the device is powered off.

Notes:

- RISK OF EXPLOSION IF BATTERY IS REPLACED BY AN INCORRECT TYPE.
- DISPOSE OF USED BATTERIES ACCORDING TO THE INSTRUCTIONS.

Before you start:

Ask our technique support and sales and purchase for the lithium battery.

Steps:

1. Install lithium batteries.
   1) Remove the screws on the battery component to disassamle the battery component.

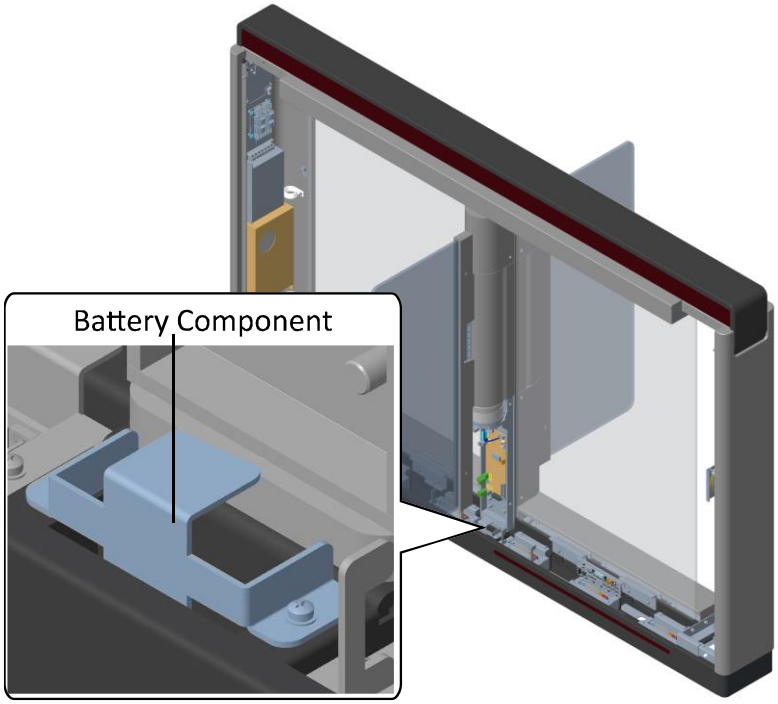

2) Put the lithium battery inside the component.
3) Tear the double sided adhesive tape and secure the components on the pedestal by the screws.

2. Connect the battery connecter to the battery interface on the lane control board.

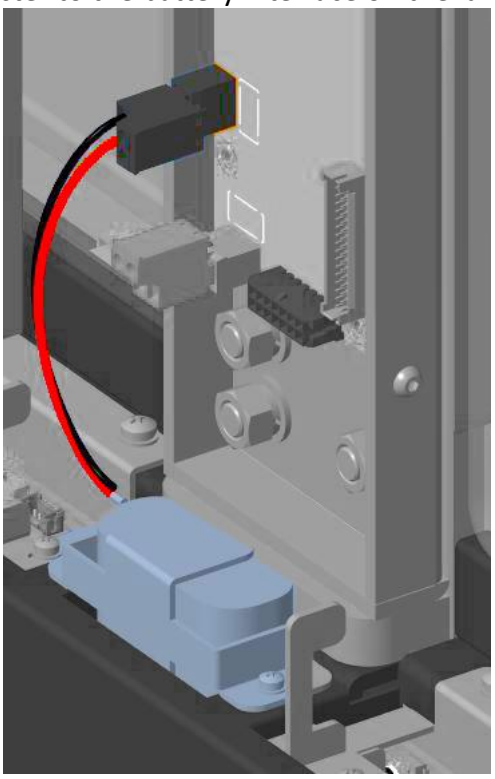

Note: There are battery interfaces on both of the master lane control board and slave lane control board.

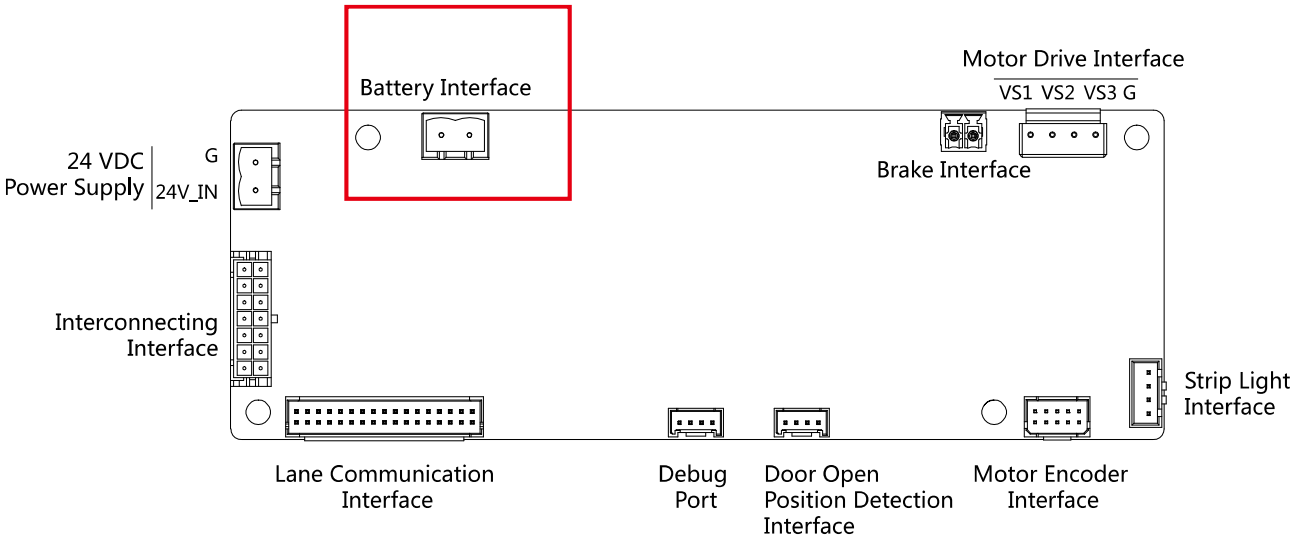
Battery Interface
Motor Drive Interface
VS1 VS2 VS3 G
24 VDC
Power Supply
G
24V_IN
Brake Interface
Interconnecting
Interface
Strip Light
Interface
Lane Communication
Interface
Debug
Port
Door Open
Position Detection
Interface
Motor Encoder
Interface

Chapter 5Device Settings

Purpose:

After installation and wiring completed, you should set the barriers closed position (study mode) before entering the work mode.

You can also set the test mode, normal mode, passing mode and memory mode, pair the keyfob, initialize the hardware, switching between RS-485 communication mode and RS-232 communication mode, and view relay output NO/NC diagram by setting the DIP switch.

- **Study Mode:** The barrier will learn the closed position.
- **Normal Mode:** The device will work properly. The barrier position configured in study mode is the closed position when the device is working normally.
- **Test Mode:** Test mode is the same as the normal mode except that the device cannot report the alarm or the event to the center.
- **Passing Mode:** There are 9 passing modes, including controlled bi-direction, controlled entrance and prohibited exit, controlled entrance and free exit, free bi-direction, free entrance and controlled exit, free entrance and prohibited exit, prohibited bi-direction, prohibited entrance and free exit.
- **Memory Mode:** By default, the memory mode is enabled. When multiple cards are swiped and authenticated, it allows multiple persons passing through the lane. When it counts the passing people number is equal to the card swiped times, or no person passing through the lane after the last person passing, the barriers will be closed.

Note: You can control the action of swiping card to open the barrier in alarm area via client software. You can also set the DIP switch to control the entrance and exit controlling type, keyfob pairing, etc. For details about the DIP switch value, see *Appendix B DIP Switch Description*.

5.1 Setting Closed Position

Purpose:

Enter the study mode through DIP switching to set the closed position of the device barrier.

Steps:

1. Set The No.1 and No.2 switches of the 8-digit DIP Switch on the main controller by referring the following figure to enter the study mode.

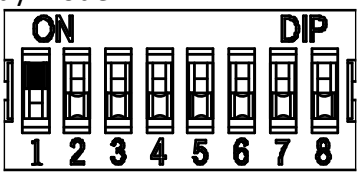

2. Adjust the closed position of the barrier.
3. Power on the device.
   The device will remember the current position (closed position) automatically.
4. Power off the device.
5. Set the No.1 and No.2 switches of the 8-digit DIP Switch on the main controller by referring to the following figure.

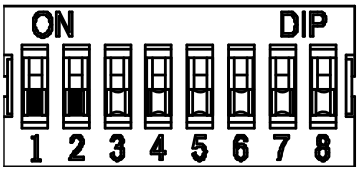

6. Power on the device again.
   The barrier will open automatically and turns back to the closed position. At this circumstance, the device enters the normal mode.
   Note: For details about the DIP switch value and meaning, see *Appendix B DIP Switch Description*.

5.2 Pairing Keyfob (Optional)

Purpose:

Pair the keyfob to the device through DIP switch to open/close the barrier remotely.

Note: for details about the keyfob's operations, see the related user manual.

Before you start:

Ask our technique supports or sales and buy the keyfob.

Steps:

1. Power off the swing barrier.
2. Set the No.4 switch of the 8-digit DIP Switch on the main control board according to the figure below.

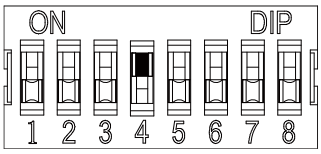

3. Power on the swing barrier and it will enter the keyfob pairing mode.
4. Hold the **Close** button for more than 10 seconds.
   The keyfob's indicator will flash twice if the pairing is completed.
   Notes:
   - You can also pair the keyfob via the client software. For details, see *Managing keyfob* in *7.2.6 Remote Configuration*.
   - Only one swing barrier can pair the keyfob. If multiple swing barriers are in the keyfob pairing mode, the keyfob will select only one of them to pair.
   - For details about DIP switch value and meaning, see *Appendix B DIP Switch Description*.

5.3 Initializing Device

Steps:

1. Remove the JP11 jumper cap.
2. Disconnect the power and reboot the device. The device buzzer buzzes a long beep.
3. When the beep stopped, plug the jumper cap back.
4. Disconnect the power and reboot the device.
   Note: The initializing of the device will restore all the parameters to the default setting and all the device events are deleted.

5.4 Switching RS-485/RS-232 Mode

Take the UART2 and UART3 on the main control board as an example. If the Jumper cap's position is like the picture displayed below. (The black part is the jumper cap.) The serial port is in RS-485 communication mode.

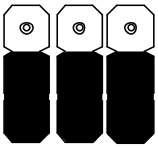

If the Jumper cap's position is like the picture displayed below. (The black part is the jumper cap.) The serial port is in RS-232 communication mode.

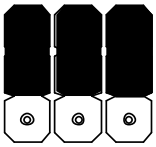

5.5 Switching Relay Output Mode (NO/NC)

5.5.1 Barrier Control Relay Output Mode

The pins of the barrier control relay on the main control board is as below:

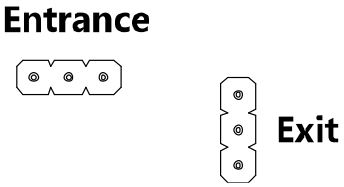

The jumper cap's position of barrier opening for entrance (NO) is as below:

The jumper cap's position of barrier opening for exit (NO) is as below:

The jumper cap's position of barrier closing for entrance (NC) is as below:

The jumper cap's position of barrier closing for exit (NC) is as below:

5.5.2 Alarm Relay Output Mode (NO/NC)

Alarm Relay Output Mode (NO):

Alarm Relay Output Mode (NC):

Chapter 6Device Activation

Purpose:

You are required to activate the terminal first before using it.

Activation via SADP, and activation via client software are supported.

The default values of the control terminal are as follows.

- The default IP address: 192.0.0.64.
- The default port No.: 8000.
- The default user name: admin.

6.1 Activating via SADP Software

SADP software is used for detecting the online device, activating the device, and resetting the password.

Get the SADP software from the supplied disk, and install the SADP according to the prompts. Follow the steps to activate the control panel**.**

Steps:

1. Run the SADP software to search the online devices.
2. Check the device status from the device list, and select an inactive device.

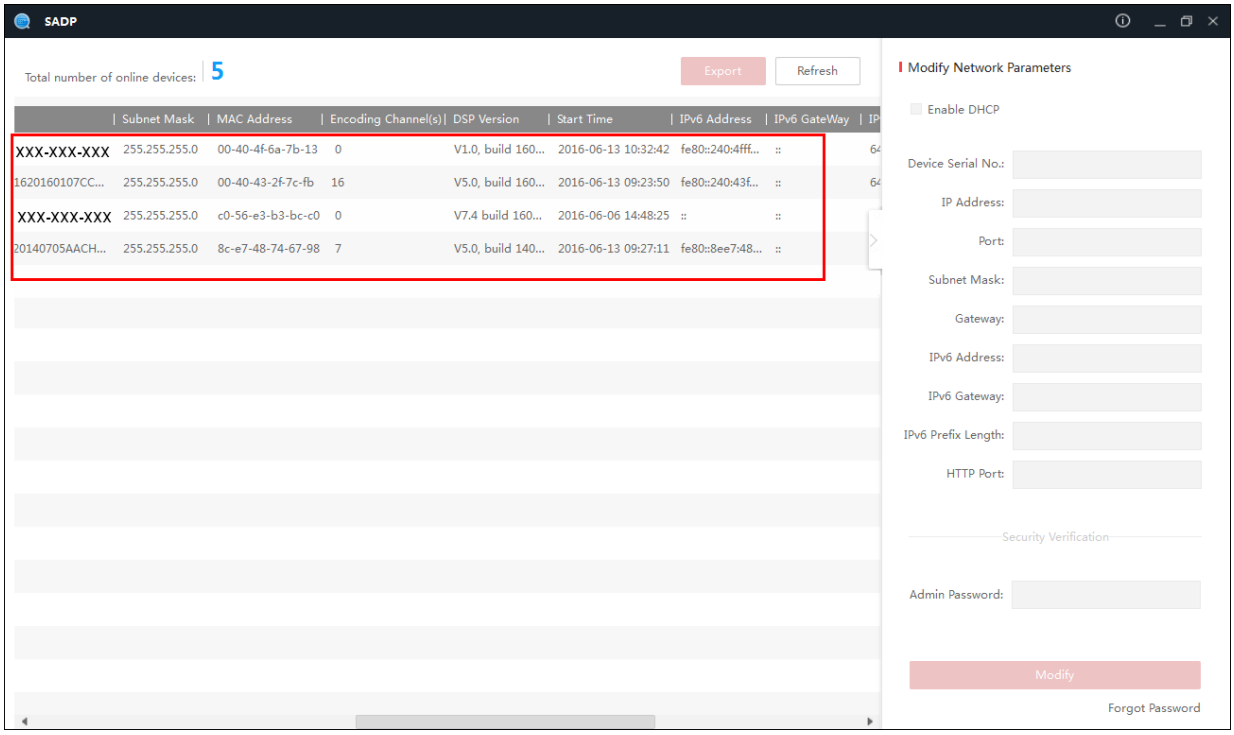

3. Create a password and input the password in the password field, and confirm the password.

STRONG PASSWORD RECOMMENDED– *We highly recommend you create a strong password of your own choosing (using a minimum of 8 characters, including upper case letters, lower case letters, numbers, and special characters) in order to increase the security of your product. And we recommend you reset your password regularly, especially in the high security system, resetting the password monthly or weekly can better protect your product.*

4. Click **Activate** to save the password.
5. Check the activated device. You can change the device IP address to the same network segment with your computer by either modifying the IP address manually or checking the checkbox of Enable DHCP.

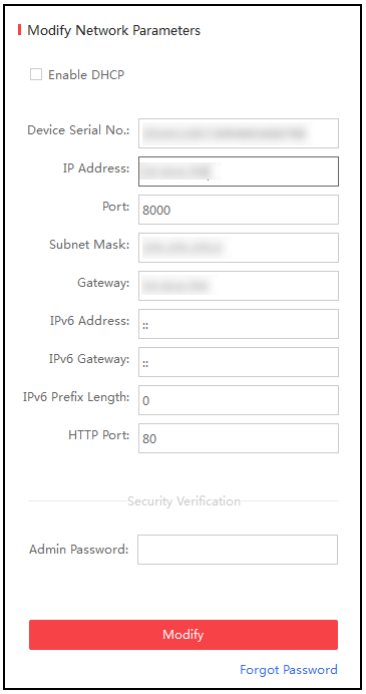

6. Input the password and click the **Modify** button to activate your IP address modification.

6.2 Activating via Client Software

The client software is versatile video management software for multiple kinds of devices.

Get the client software from the supplied disk, and install the software according to the prompts. Follow the steps to activate the control panel.

Steps:

1. Run the client software and the control panel of the software pops up, as shown in the figure below.

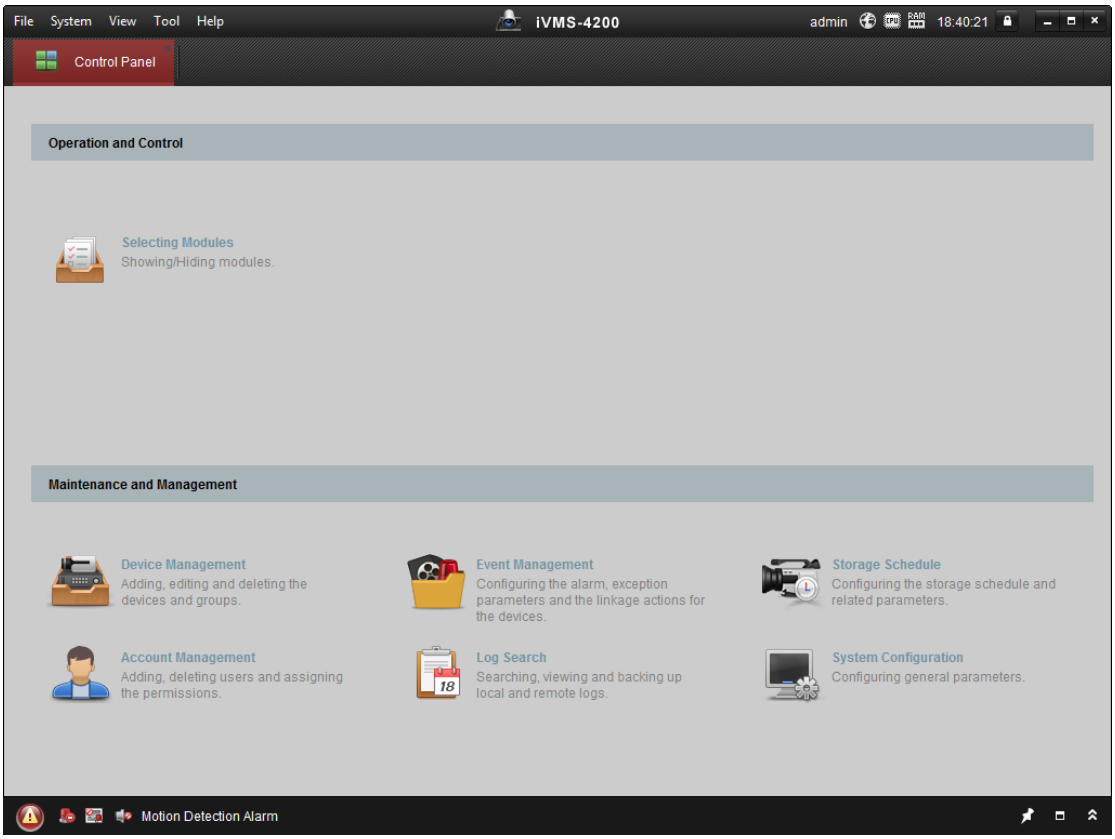

2. Click **Device Management** to enter the Device Management interface.
3. Check the device status from the device list, and select an inactive device.

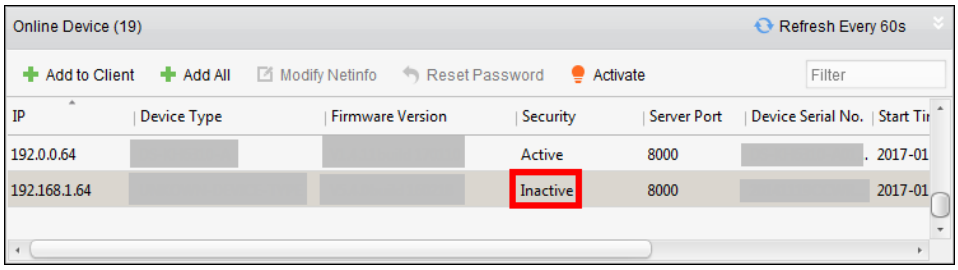

4. Check the device status from the device list, and select an inactive device.
5. Click the **Activate** button to pop up the Activation interface
6. In the pop-up window, create a password in the password field, and confirm the password.

STRONG PASSWORD RECOMMENDED– *We highly recommend you create a strong password of your own choosing (using a minimum of 8 characters, including upper case letters, lower case letters, numbers, and special characters) in order to increase the security of your product. And we recommend you reset your password regularly, especially in the high security system, resetting the password monthly or weekly can better protect your product.*

7. Click **OK** button to start activation.
8. Click the **Modify Netinfor** button to pop up the Network Parameter Modification interface.
9. Change the device IP address to the same network segment with your computer by either modifying the IP address manually.
10. Input the password and click the **OK** button to save the settings.

Chapter 7 Client Operation

You can set and operate the access control devices via the client software. This chapter will introduce the access control device related operations in the client software. For integrated operations, refer to *User Manual of iVMS-4200 Client Software*.

7.1 Function Module

Control Panel of iVMS-4200:

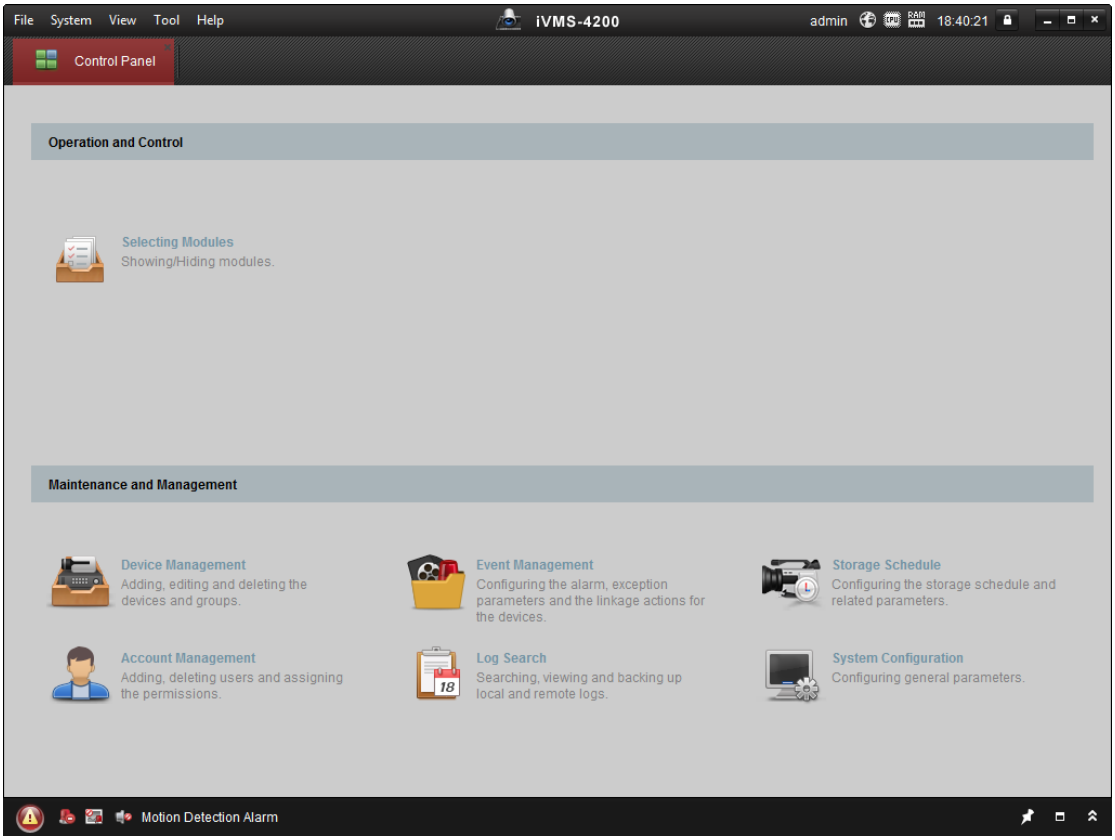

7.2 Access Control Management

Purpose:

The Access Control module is applicable to access control devices and video intercom. It provides multiple functionalities, including person and card management, permission configuration, access control status management, video intercom, and other advanced functions.

You can also set the event configuration for access control and display access control points and zones on E-map.

Note: For the user with access control module permissions, the user can enter the Access Control module and configure the access control settings.

Click in the control panel, and check **Access Control** to add the Access Control module to the control panel.

Click to enter the Access Control module.

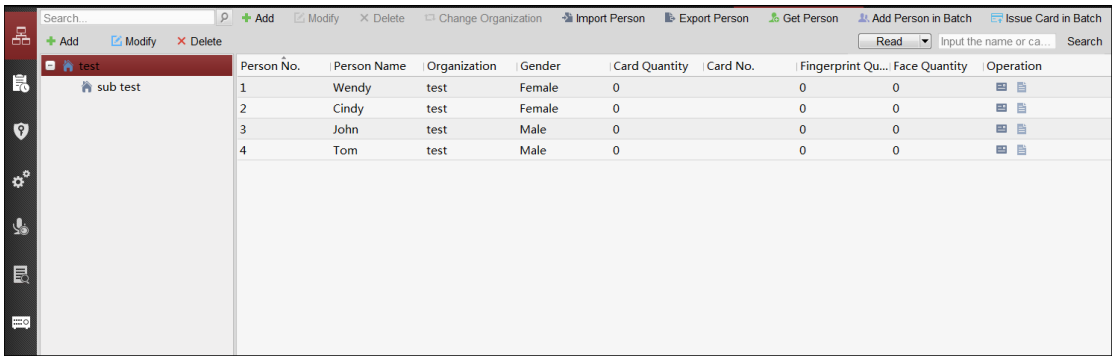

Before you start:

For the first time opening the Access Control module, the following dialog will pop up and you are required to select the scene according to the actual needs.

Non-residence: You can set the attendance rule when adding person, while set the access control parameters.

Residence: You cannot set the attendance rule when adding person.

Note: Once the scene is configured, you cannot change it later.

7.2.1 Adding Access Control Device

Click in the Access Control module to enter the following interface.

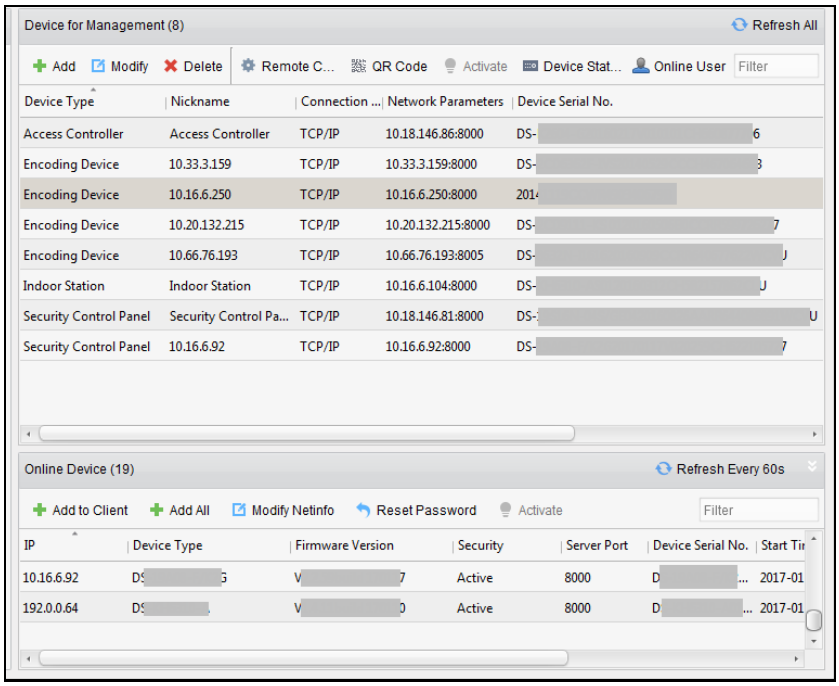

Note: After adding the device, you should check the device arming status in **Tool – Device Arming Control**. If the device is not armed, you should arm it, or you will not receive the real-time events via the client software. For details about device arming control, refer *7.10 Arming Control*.

Adding Online Device

Purpose:

The active online devices in the same local subnet with the client software will be displayed on the **Online Device** area. You can click the **Refresh Every 60s** button to refresh the information of the online devices.

Note: You can click to hide the **Online Device** area.

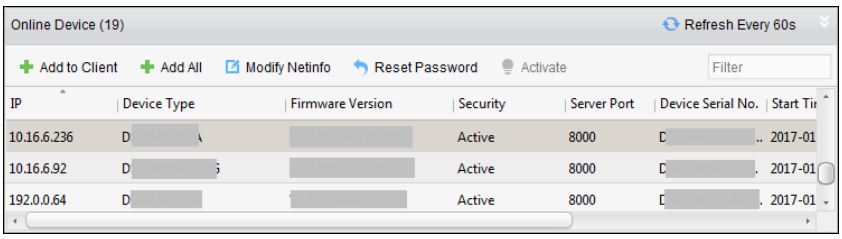

Steps:

1. Select the devices to be added from the list.

   Note: For the inactive device, you need to create the password for it before you can add the device properly.

2. Click **Add to Client** to open the device adding dialog box.
3. Input the required information.

   Nickname: Edit a name for the device as you want.

   Address: Input the device's IP address. The IP address of the device is obtained automatically in this adding mode.

   Port: Input the device port No. The default value is *8000*.

   User Name: Input the device user name. By default, the user name is *admin*.

   Password: Input the device password.

STRONG PASSWORD RECOMMENDED– *We highly recommend you create a strong password of your own choosing (using a minimum of 8 characters, including upper case letters, lower case letters, numbers, and special characters) in order to increase the security of your product. And we recommend you reset your password regularly, especially in the high security system, resetting the password monthly or weekly can better protect your product.*

4. Optionally, check the **Export to Group** checkbox to create a group by the device name.
   You can import all the channels of the device to the corresponding group by default.
   Note: iVMS-4200 also provides a method to add the offline devices.
   1) Check the **Add Offline Device** checkbox.
   2) Input the required information, including the device channel number and alarm input number.
   3) Click **Add**.
   When the offline device comes online, the software will connect it automatically.
5. Click **Add** to add the device.

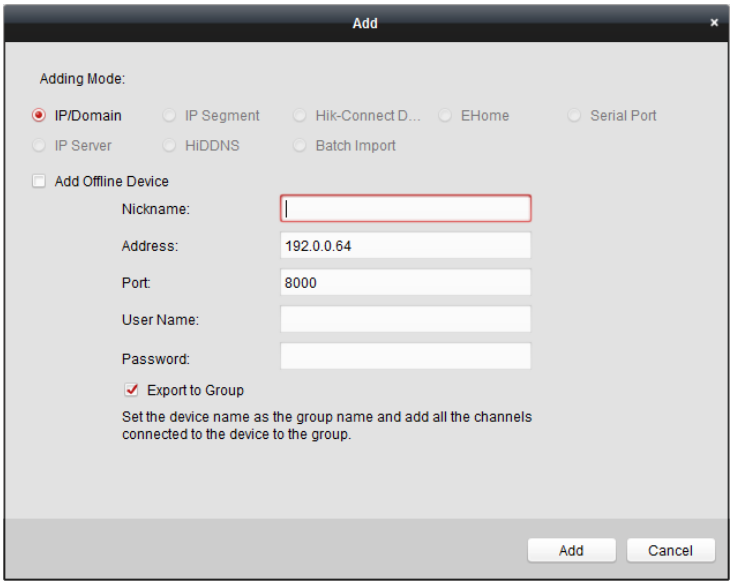

➢ Adding Multiple Online Device

If you want to add multiple online devices to the client software, click and hold *Ctrl* key to select multiple devices, and click **Add to Client** to open the device adding dialog box. In the pop-up message box, enter the user name and password for the devices to be added.

➢ Adding All Online Devices

If you want to add all the online devices to the client software, click **Add All** and click **OK** in the pop-up message box. Then enter the user name and password for the devices to be added.

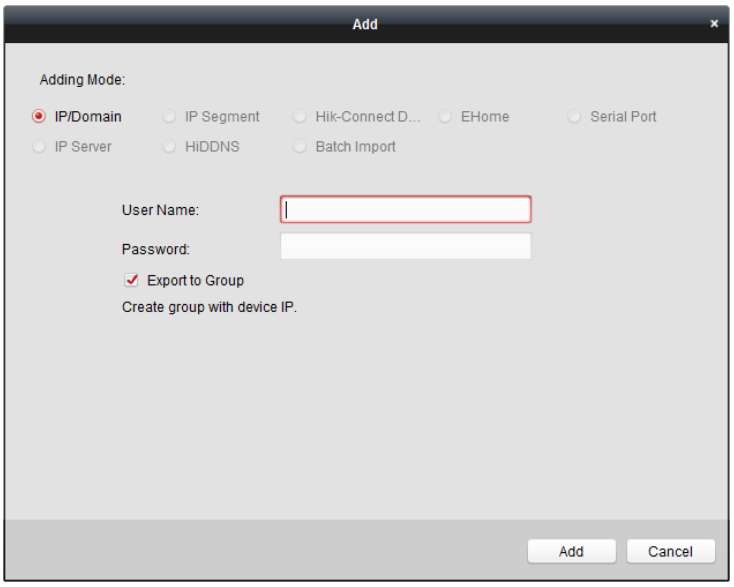

Adding Devices by IP or Domain Name

Steps:

1. Click **Add** to open the device adding dialog box.
2. Select **IP/Domain** as the adding mode.
3. Input the required information.
   Nickname: Edit a name for the device as you want.
   Address: Input the device's IP address or domain name.
   Port: Input the device port No. The default value is *8000*.
   User Name: Input the device user name. By default, the user name is *admin*.
   Password: Input the device password.

   STRONG PASSWORD RECOMMENDED– *We highly recommend you create a strong password of your own choosing (using a minimum of 8 characters, including upper case letters, lower case letters, numbers, and special characters) in order to increase the security of your product. And we recommend you reset your password regularly, especially in the high security system, resetting the password monthly or weekly can better protect your product.*
4. Optionally, check the **Export to Group** checkbox to create a group by the device name.
   You can import all the channels of the device to the corresponding group by default.
   Note: iVMS-4200 also provides a method to add the offline devices.
   1) Check the **Add Offline Device** checkbox.
   2) Input the required information, including the device channel number and alarm input number.
   3) Click **Add**.

   When the offline device comes online, the software will connect it automatically.
5. Click **Add** to add the device.

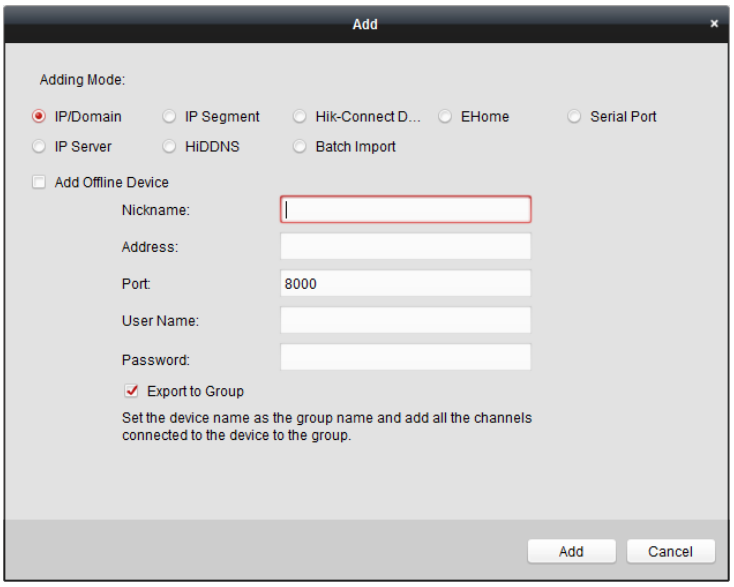

Adding Devices by IP Segment

Steps:

1. Click **Add** to open the device adding dialog box.
2. Select **IP Segment** as the adding mode.
3. Input the required information.
   Start IP: Input a start IP address.
   End IP: Input an end IP address in the same network segment with the start IP.
   Port: Input the device port No. The default value is *8000*.
   User Name: Input the device user name. By default, the user name is *admin*.
   Password: Input the device password.

   STRONG PASSWORD RECOMMENDED– *We highly recommend you create a strong password of your own choosing (using a minimum of 8 characters, including upper case letters, lower case letters, numbers, and special characters) in order to increase the security of your product. And we recommend you reset your password regularly, especially in the high security system, resetting the password monthly or weekly can better protect your product.*
4. Optionally, check the **Export to Group** checkbox to create a group by the device name.
   You can import all the channels of the device to the corresponding group by default.
   Note: iVMS-4200 also provides a method to add the offline devices.
   1) Check the **Add Offline Device** checkbox.
   2) Input the required information, including the device channel number and alarm input number.
   3) Click **Add**.

   When the offline device comes online, the software will connect it automatically.
5. Click **Add**.
   You can add the device which the IP address is between the start IP and end IP to the device list.

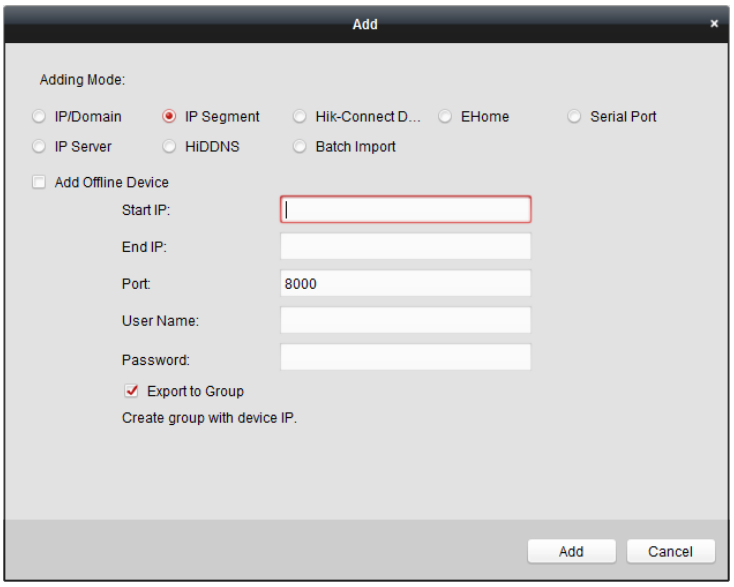

Adding Devices by Hik-Connect Domain

Purpose:

You can add the devices connected via Hik-Connect by inputting the Hik-Connect account and password.

Before you start:

Add the devices to Hik-Connect account via iVMS-4200, iVMS-4500 Mobile Client, or Hik-Connect first. For details about adding the devices to Hik-Connect account via iVMS-4200, refer to *the User Manual of iVMS-4200 Client Software.*

➢ Add Single Device

Steps:

1. Click **Add** to open the device adding dialog.
2. Select **Hik-Connect Domain** as the adding mode.
3. Select **Single Adding**.
4. Input the required information.
   Nickname: Edit a name for the device as you want.
   Device Serial No.: Input the device serial No.
   User Name: Input the device user name. By default, the user name is *admin*.
   Password: Input the device password.

   STRONG PASSWORD RECOMMENDED– *We highly recommend you create a strong password of your own choosing (using a minimum of 8 characters, including upper case letters, lower case letters, numbers, and special characters) in order to increase the security of your product. And we recommend you reset your password regularly, especially in the high security system, resetting the password monthly or weekly can better protect your product.*
   Hik-Connect Account: Input the Hik-Connect account.
   Hik-Connect Password: Input the Hik-Connect password.
5. Optionally, check the **Export to Group** checkbox to create a group by the device name.

You can import all the channels of the device to the corresponding group by default.

6. Click **Add** to add the device.

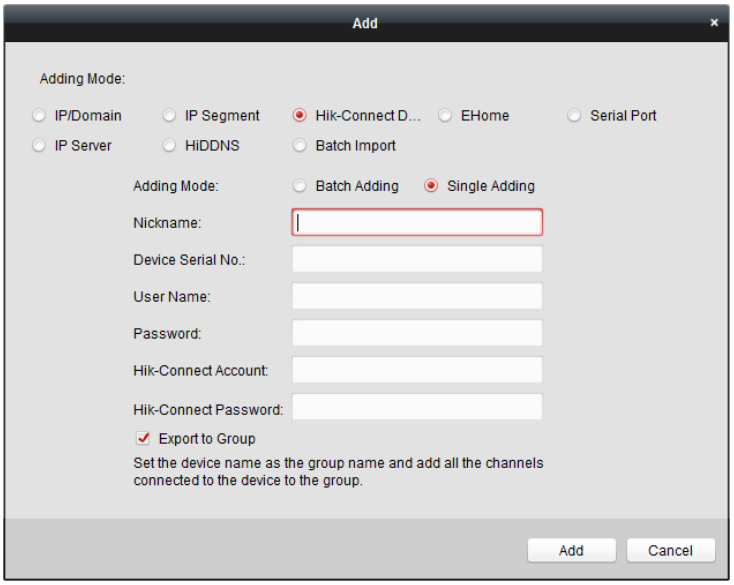

Add Devices in Batch

Steps:

1. Click **Add** to open the device adding dialog.

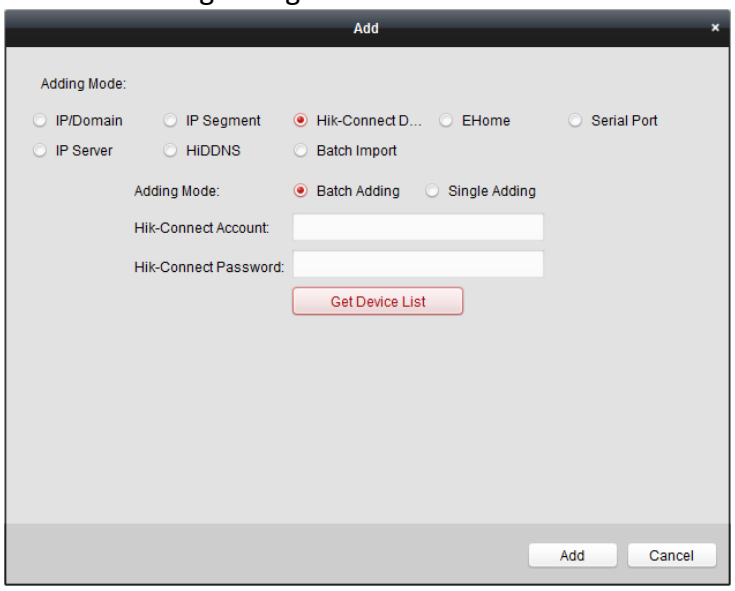

2. Select **Hik-Connect Domain** as the adding mode.
3. Select **Batch Adding**.
4. Input the required information.
   Hik-Connect Account: Input the Hik-Connect account.
   Hik-Connect Password: Input the Hik-Connect password.
5. Click **Get Device List** to show the devices added to Hik-Connect account.

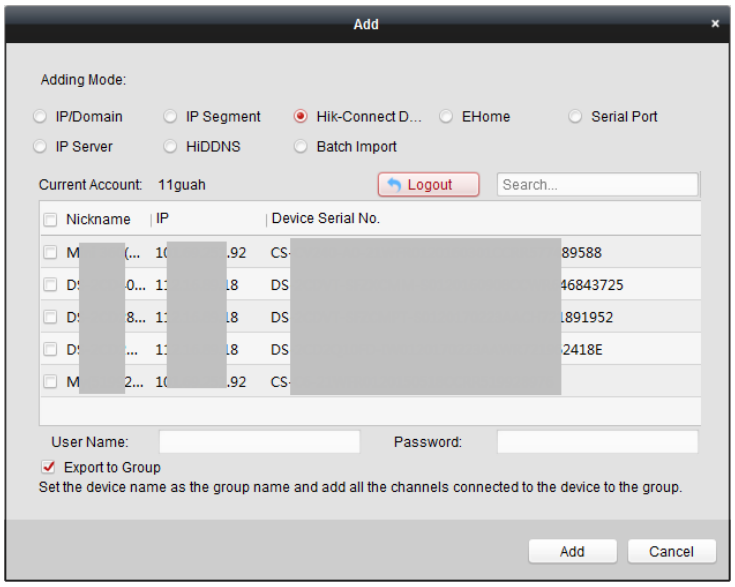

6. Check the checkbox(es) to select the device as desired.
7. Input the user name and password for the devices to be added.
8. Optionally, check the **Export to Group** checkbox to create a group by the device name. You can import all the channels of the device to the corresponding group by default.
9. Click **Add** to add the devices.

Adding Devices by Serial Port

Purpose:

You can add access control device connected via serial port.

Steps:

1. Click **Add** to open the device adding dialog box.
2. Select **Serial Port** as the adding mode.

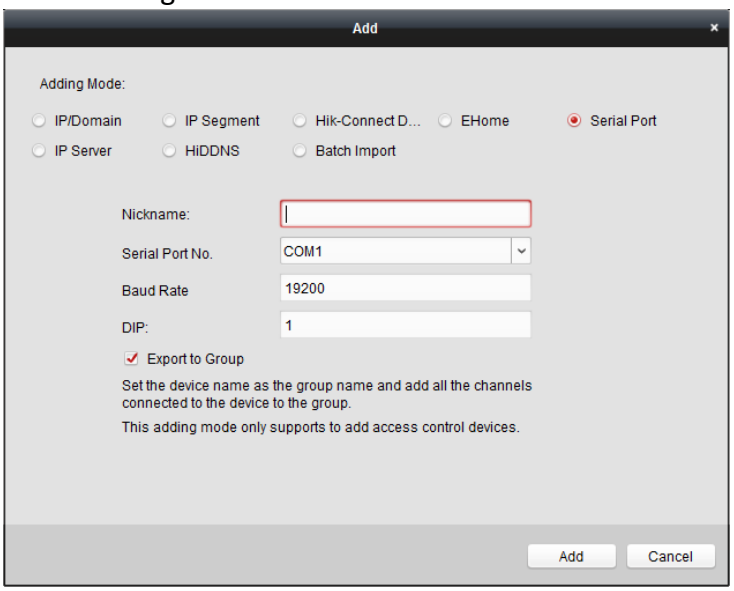

3. Input the required information.
   Nickname: Edit a name for the device as you want.
   Serial Port No.: Select the device's connected serial port No.

Baud Rate: Input the baud rate of the access control device.
DIP: Input the DIP address of the device.

4. Optionally, check the **Export to Group** checkbox to create a group by the device name. You can import all the channels of the device to the corresponding group by default.
   Note: iVMS-4200 also provides a method to add the offline devices.
   1) Check the **Add Offline Device** checkbox.
   2) Input the required information, including the device channel number and alarm input number.
   3) Click **Add**.

   When the offline device comes online, the software will connect it automatically.
5. Click **Add** to add the device.

Adding Devices by IP Server

Steps:

1. Click **Add** to open the device adding dialog box.
2. Select **IP Server** as the adding mode.

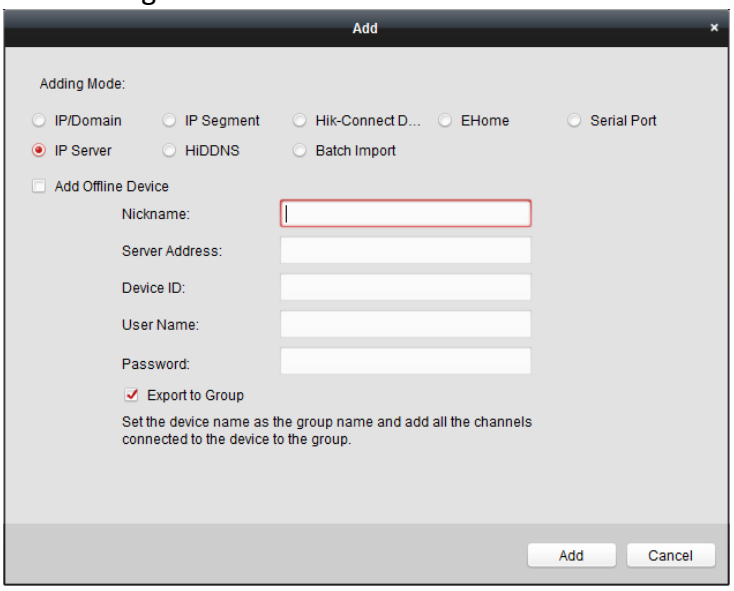

3. Input the required information.
   Nickname: Edit a name for the device as you want.
   Server Address: Input the IP address of the PC that installs the IP Server.
   Device ID: Input the device ID registered on the IP Server.
   User Name: Input the device user name. By default, the user name is *admin*.
   Password: Input the device password.

   STRONG PASSWORD RECOMMENDED– *We highly recommend you create a strong password of your own choosing (using a minimum of 8 characters, including upper case letters, lower case letters, numbers, and special characters) in order to increase the security of your product. And we recommend you reset your password regularly, especially in the high security system, resetting the password monthly or weekly can better protect your product.*

4. Optionally, check the **Export to Group** checkbox to create a group by the device name.
   You can import all the channels of the device to the corresponding group by default.
   Note: iVMS-4200 also provides a method to add the offline devices.
   1) Check the **Add Offline Device** checkbox.
   2) Input the required information, including the device channel number and alarm input number.
   3) Click **Add**.
   When the offline device comes online, the software will connect it automatically.
5. Click **Add** to add the device.

Importing Devices in Batch

Purpose:

The devices can be added to the software in batch by inputting the device information in the pre-defined CSV file.

Steps:

1. Click **Add** to open the device adding dialog box.
2. Select **Batch Import** as the adding mode.

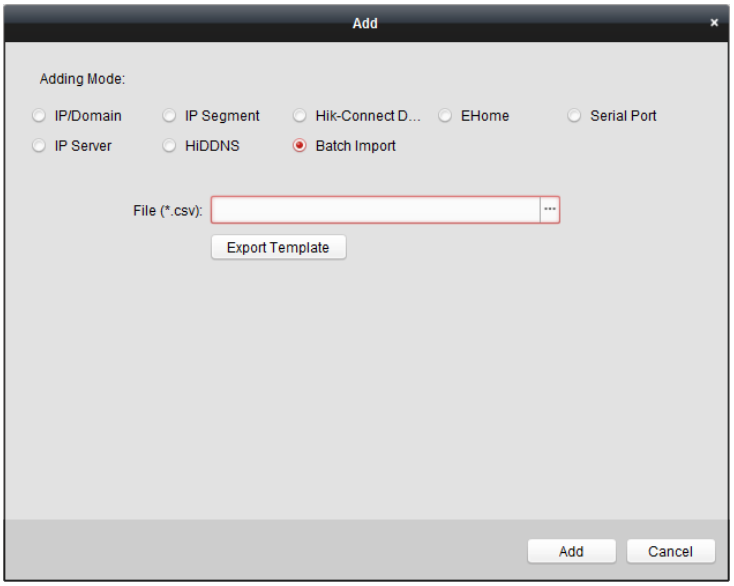

3. Click **Export Template** and save the pre-defined template (CSV file) on your PC.
4. Open the exported template file and input the required information of the devices to be added on the corresponding column.
   - **Nickname**: Edit a name for the device as you want.
   - **Adding Mode**: You can input 0, 2, 3, 4, 5, or 6 which indicated different adding modes. 0 indicates that the device is added by IP address or domain name; 2 indicates that the device is added via IP server; 3 indicates that the device is added via HiDDNS; 4 indicates that the device is added via EHome protocol; 5 indicates that the device is added by serial port; 6 indicates that the device is added via Hik-Connect Domain.
   - **Address**: Edit the address of the device. If you set 0 as the adding mode, you should input the IP address or domain name of the device; if you set 2 as the adding mode, you should input the IP address of the PC that installs the IP Server; if you set 3 as the adding mode,

you should input *www.hik-online.com*.

- **Port**: Input the device port No.. The default value is *8000*.
- **Device Information**: If you set 0 as the adding mode, this field is not required; if you set 2 as the adding mode, input the device ID registered on the IP Server; if you set 3 as the adding mode, input the device domain name registered on HiDDNS server; if you set 4 as the adding mode, input the EHome account; if you set 6 as the adding mode, input the device serial No.
- **User Name**: Input the device user name. By default, the user name is *admin*.
- **Password**: Input the device password.

STRONG PASSWORD RECOMMENDED– *We highly recommend you create a strong password of your own choosing (using a minimum of 8 characters, including upper case letters, lower case letters, numbers, and special characters) in order to increase the security of your product. And we recommend you reset your password regularly, especially in the high security system, resetting the password monthly or weekly can better protect your product.*

- **Add Offline Device**: You can input 1 to enable adding the offline device, and then the software will automatically connect it when the offline device comes online. 0 indicates disabling this function.
- **Export to Group**: You can input 1 to create a group by the device name (nickname). All the channels of the device will be imported to the corresponding group by default. 0 indicates disabling this function.
- **Channel Number**: If you set 1 for Add Offline Device, input the channel number of the device. If you set 0 for Add Offline Device, this field is not required.
- **Alarm Input Number**: If you set 1 for Add Offline Device, input the alarm input number of the device. If you set 0 for Add Offline Device, this field is not required.
- **Serial Port No.:** If you set 5 as the adding mode, input the serial port No. for the access control device.
- **Baud Rate:** If you set 5 as the adding mode, input the baud rate of the access control device.
- **DIP:** If you set 5 as the adding mode, input the DIP address of the access control device.
- **Hik-Connect Account:** If you set 6 as the adding mode, input the Hik-Connect account.
- **Hik-Connect Password:** If you set 6 as the adding mode, input the Hik-Connect password.

5. Click ··· and select the template file.
6. Click **Add** to import the devices.

The devices will be displayed on the device list for management after added successfully. You can check the resource usage, HDD status, recording status, and other information of the added devices on the list.

Click **Refresh All** to refresh the information of all added devices. You can also input the device name in the filter field for search.

7.2.2 Viewing Device Status

In the device list, you can select the device and then click **Device Status** button to view its status.

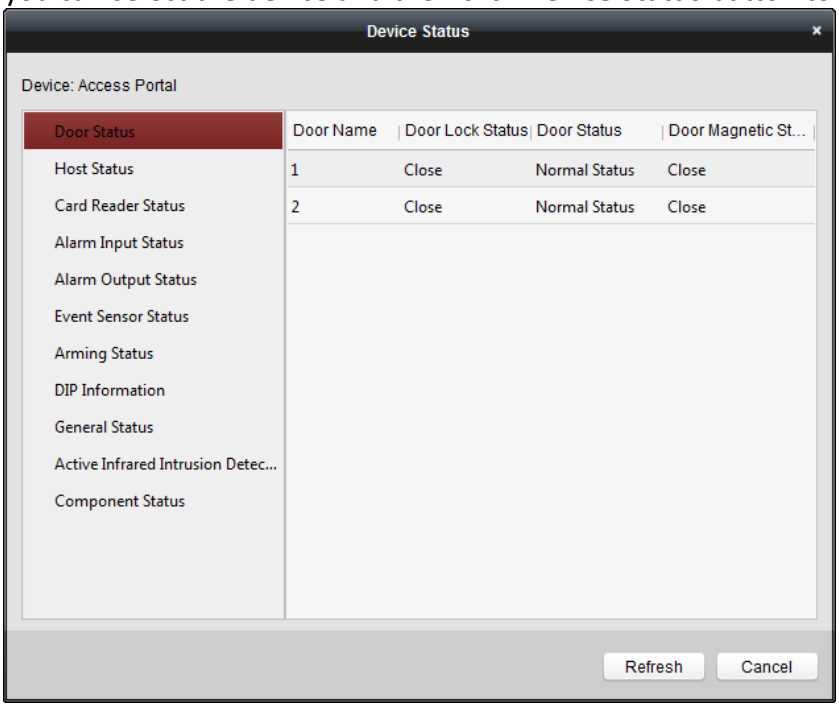

Note: The interface may different from the picture displayed above. Refer to the actual interface when adopting this function.

Status Name	Description
Door Status	View the device door's status.
Host Status	View the device host's status, including the device power supply status, anti-passing back status, host tampering status, etc.
Card Reader Status	View the card reader's status, including the online status, the tampering status, and the authentication method.
Alarm Input Status	View the alarm input's status.
Alarm Output Status	View the alarm output's status.
Event Sensor Status	View the event sensor's status.
Arming Status	View the arming device's IP address and its arming type.
DIP Information	View the device local DIP information.
General Status	View the device general status, including the BUS synchronization status, IR people counting for entrance, authenticated people counting for entrance, etc.
Active Infrared Intrusion Detector Status	View the status of active infrared intrusion detector, receiving board, etc.
Component Status	View the device components' status, including the status of the motor sensor, brake status, etc.

7.2.3 Editing Basic Information

Purpose:
After adding the access control device, you can edit the device basic information.
Steps:
1. Select the device in the device list.
2. Click **Modify** to pop up the modifying device information window.
3. Click **Basic Information** tab to enter the Basic Information interface.

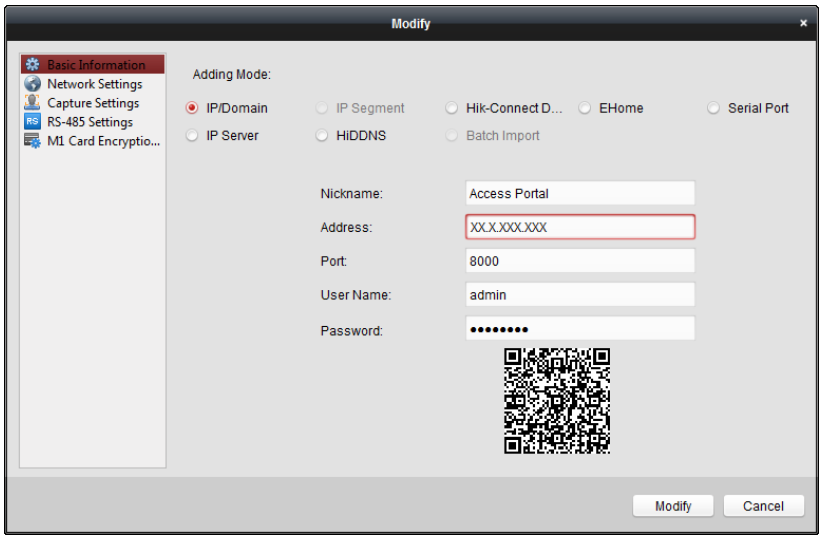

4. Edit the device information, including the adding mode, the device name, the device IP address, port No., user name, and the password.

7.2.4 RS-485 Settings

Purpose:
You can set the RS-485 parameters including the serial port, the baud rate, the data bit, the stop bit, the parity type, the communication mode, and the working mode.
Note: The RS-485 Settings should be supported by the device.
Steps:
1. Select the device in the device list, and click **Modify** to pop up the modifying device information window.
2. Click **RS-485 Settings** tab to enter the RS-485 settings interface.

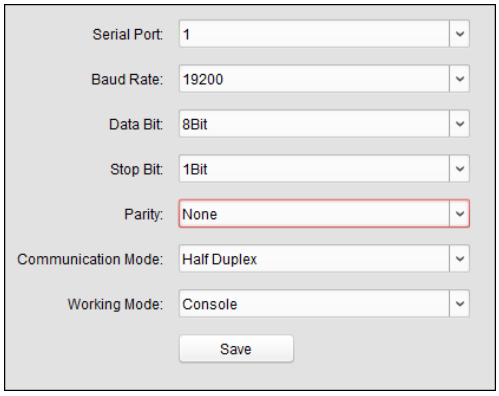

2. Select the serial No. of the port from the dropdown list to set the RS-485 parameters.
3. Set the baud rate, data bit, the stop bit, parity type, communication mode, and working mode in the dropdown list.
4. Click **Save** to save the settings and the configured parameters will be applied to the device automatically.

Note: After changing the working mode, the device will be rebooted. A prompt will be popped up after changing the working mode.

7.2.5 Authenticating M1 Card Encryption

Before you start:

You should use the specified Hikvision card enrollment station to issue card. For details, refer to *Adding Person (Card)* in *Chapter 7.4.1 Adding Person.*

Purpose:

The M1 Card Encryption function increases the authentication security level, which should be applied together with the card enrollment station of our company via the client software or the web client. After issuing the card, you can set the M1 card encryption function on the controller.

Note: The function should be supported by the access control device and the card reader.

Steps:

1. Select the device in the device list, and click **Modify** to pop up the modifying device information window.
2. Click **M1 Card Encryption** tab to enter the M1 Card Encryption interface.
3. In the M1 Card Encryption interface, check **Enable** checkbox to enable the M1 card encryption function.

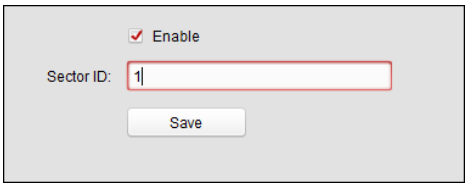

4. Set the sector ID.
5. Click **Save** to save the settings.

   Note: The sector ID ranges from 1 to 100.

7.2.6 Remote Configuration

Purpose:

In the device list, select the device and click **Remote Configuration** button to enter the remote configuration interface. You can set the detailed parameters of the selected device.

Checking Device Information

Steps:

1. In the device list, you can click **Remote Configuration** to enter the remote configuration interface.
2. Click **System** -> **Device Information** to check the device basic information and the device version information.

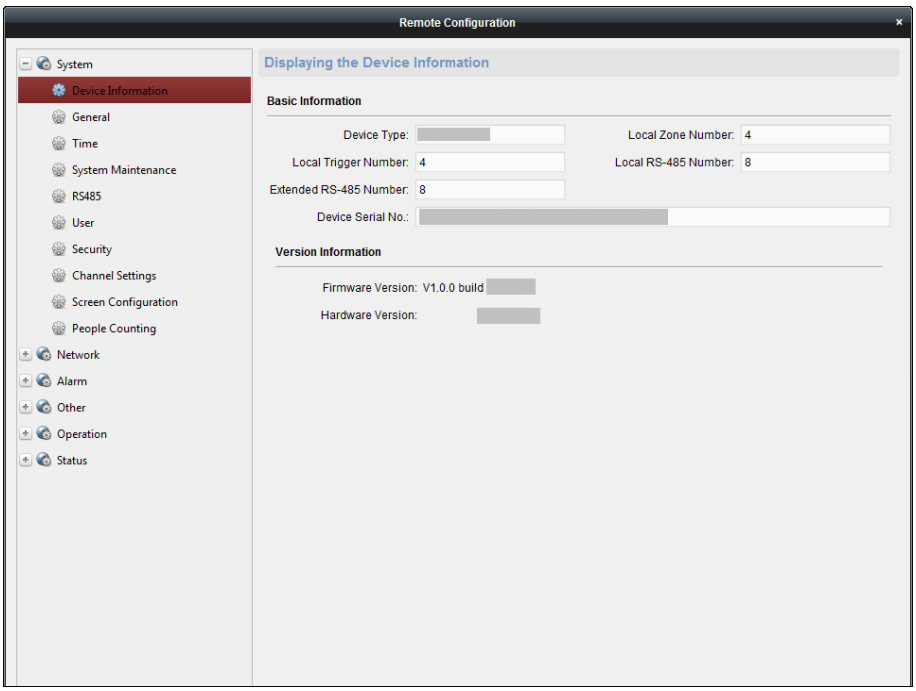

Editing Device Name

In the Remote Configuration interface, click **System** -> **General** to configure the device name and overwrite record files parameter. Click **Save** to save the settings.

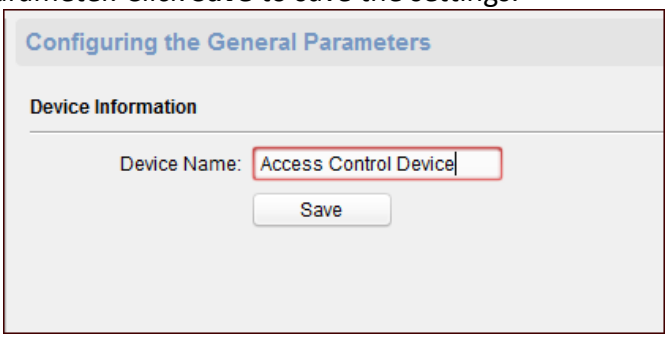

Editing Time

Steps:

1. In the Remote Configuration interface, click **System** -> **Time** to configure the time zone.
2. (Optional) Check **Enable NTP** and configure the NTP server address, the NTP port, and the synchronization interval.
3. (Optional) Check **Enable DST** and configure the DST star time, end time and the bias.
4. Click **Save** to save the settings.

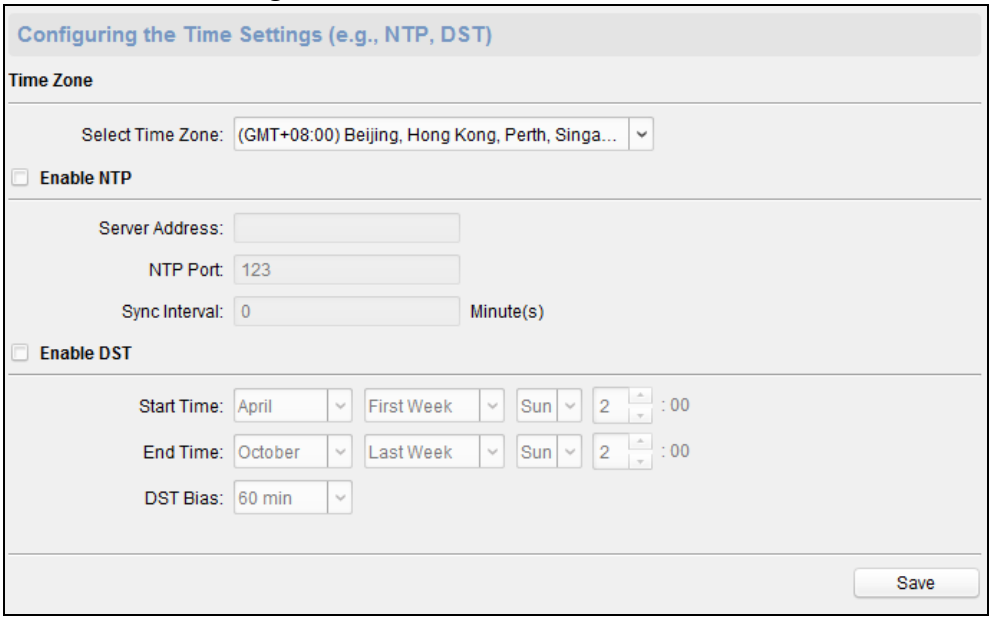

Setting System Maintenance

Purpose:

You can reboot the device remotely, restore the device to default settings, import configuration file, upgrade the device, etc.

Steps:

1. In the Remote Configuration interface, click **System** -> **System Maintenance**.
2. Click **Reboot** to reboot the device.
   Or click **Restore Default Settings** to restore the device settings to the default ones, excluding the IP address.
   Or click **Restore All** to restore the device parameters to the default ones. The device should be activated after restoring.
   Note: The configuration file contains the device parameters.
3. You can also remote upgrade the device.
   1) In the Remote Upgrade part, select Controller Upgrade File, Card Reader Upgrade File or Upgrade File of Lange Controller from the drop down list.
   2) Upgrade File of Lange Controller from the drop down list.
      Controller Upgrade File: Upgrade access controller.
      Card Reader Upgrade File: Upgrade card reader. Only card readers connected via RS-485 can be upgraded remotely.
      Upgrade File of Lane Controller: Select master lane controller or slave lane controller to upgrade.

3) Click ··· to select the upgrade file.
4) Click **Upgrade** to start upgrading.

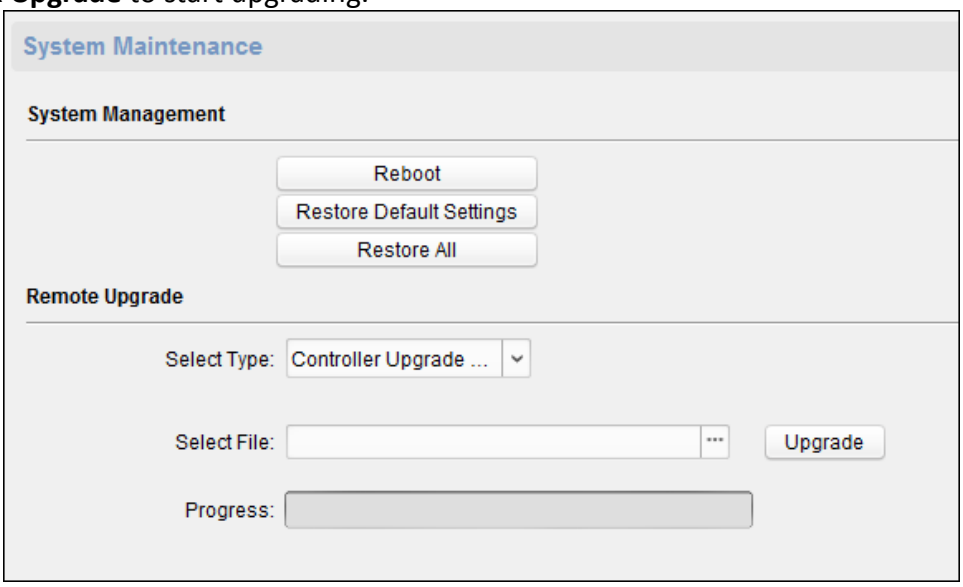

Setting RS-485 Parameters

You can set the RS-485 parameters in this page.

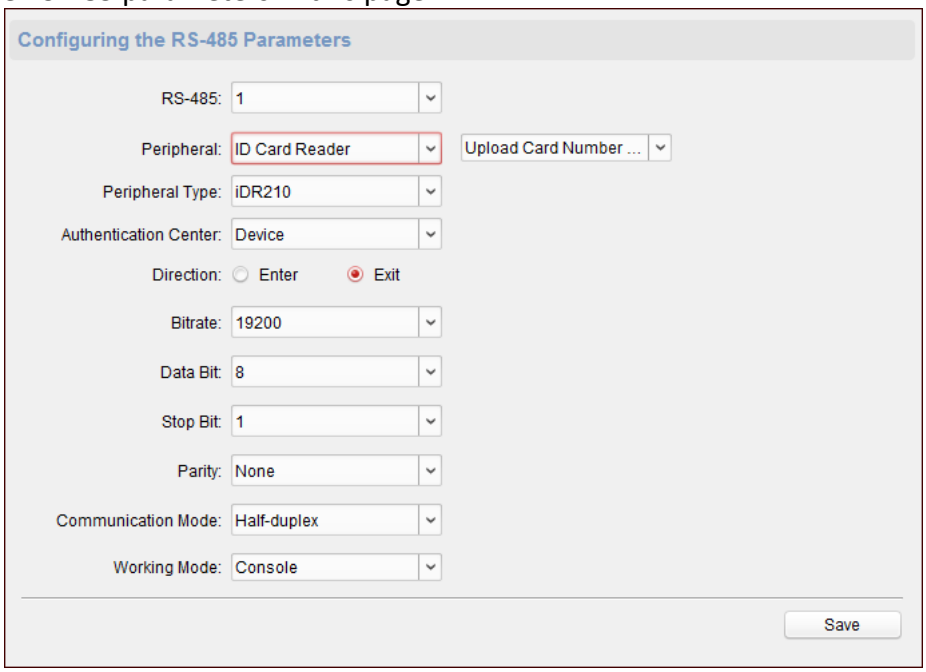

Notes:

- Supports 9 peripherals: ID card reader, IC card reader, QR code scanner, fingerprint and card reader ,text screen, card recycler, fingerprint reader, and ID card identification terminal.
- If selecting ID card reader, QR code scanner, card recycler, text screen, or fingerprint reader as the peripheral, you should set the accessing direction.
- If selecting IC card reader or fingerprint reader as the external device, you should set accessing direction by setting the DIP switch.
- The system supports 3 authentication centers: Device, Client and Unlimited Access.

If you select Unlimited Access, the swing barrier will open the door immediately after any user's authentication via the configured peripheral (except for the face recognition terminal) on this page. If connecting a face recognition terminal, the person should be added to the face picture library, or the function cannot be operated.

- The authentication center type Client is mainly adopted by developers of the third party software.

Managing Network User

Steps:

1. In the Remote Configuration interface, click **System** -> **User** -> **Network User**.

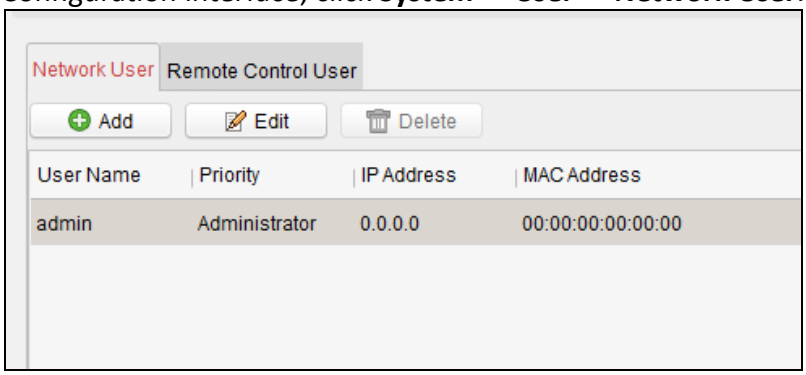

2. Click **Add** to add the user (Do not support by the elevator controller.).
   Or select a user in the user list and click **Edit** to edit the user. You are able to edit the user password, the IP address, the MAC address and the user permission. Cilck **OK** to confirm editing.

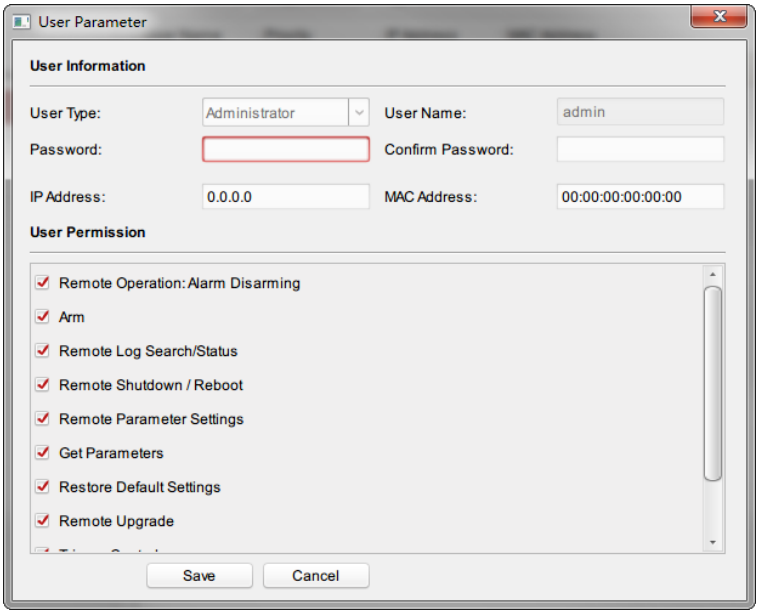

Managing Remote Control User

Purpose:

You can match the remote control's code in this page. After the code is matched, you can control the device by the remote control.

Steps:

1. In the Remote Configuration interface, click **System** -> **User** -> **Remote Control User**.
2. Click **Add** to add the user.

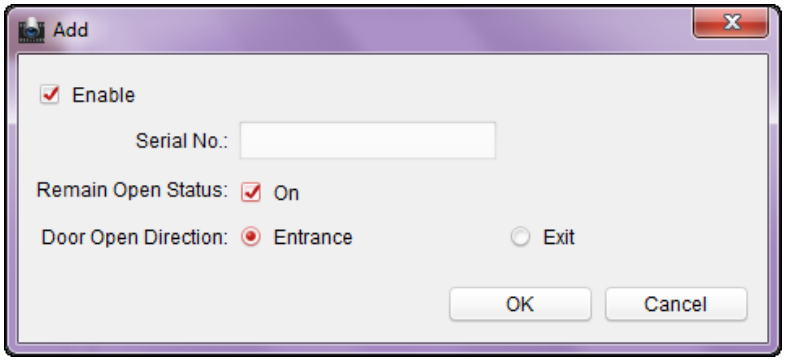

3. Check **Enable** in the pop-up window and set the remote control's serial No.
4. (Optional) Enable the Remian Open Status of the swing barrier.
   Note: If enabling this function, after the remote control matching completed, you can control the baffle remaining open by using the remote control.
5. Set the door open direction.
6. Click **OK** to save the settings.
   Note: You can add up to 32 remote control users.

Setting Security

Purpose:

You can set the security parameters when logging in the device.

Steps:

1. Click **System** -> **Security**.

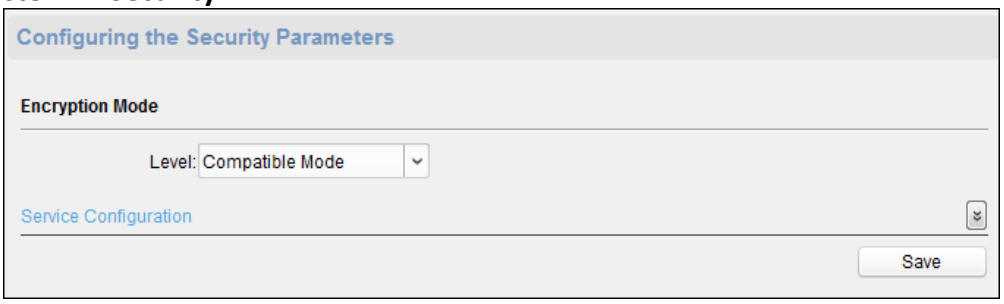

2. Select the encryption mode in the dropdown list.
   You can select Compatible Mode or Encryption Mode.
3. Click **Save** to save the settings.

Configuring Passing Parameters

Purpose:

You can set the passing parameters for a person to pass through the device.

Click **System** -> **Passing Settings** and set the parameters. Click **Save** to save the settings.

The parameters descriptions are as follows:

Delayed Time Duration When Closing Barrier:	Set the delayed time duration for barrier closing. The barrier will be closed after the configured delayed time duration.
Max. Intrusion Duration:	If a person has entered the lane or passed through the

lane for more than the configured time duration, an alarm will be triggered. 0 represents the function is disabled.

Note: The suggested minimum detection time duration is 2s.

Overstayed Time Duration: If the device detects persons or things staying in the lane for more than the configured time duration, an alarm will be triggered.

Max. IR Obstructed Duration: Set the maximum time duration for the obstruction of the IR light. If the IR light is obstructed for more than the configured time duration, the alarm will be triggered. 0 represents the function is disabled.

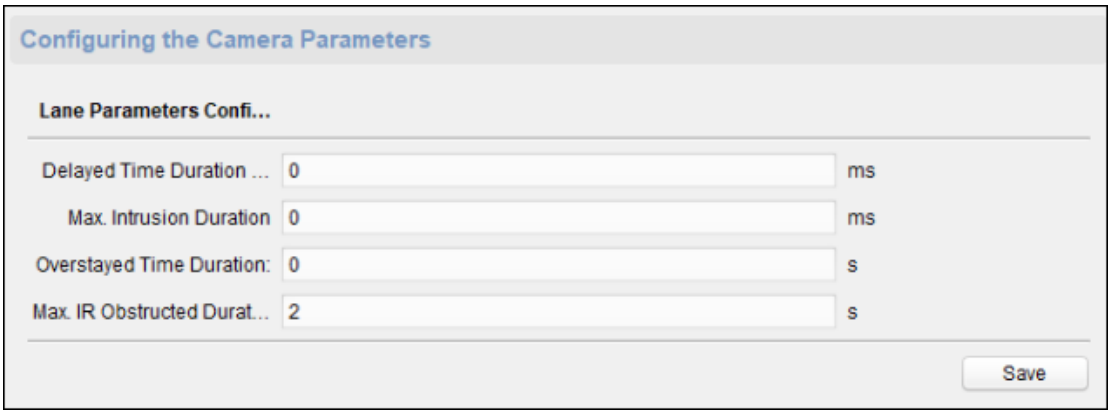

Configuring Screen Parameters

Purpose:

The device can connect to a text screen. You can set the display parameters on this page.

Click **System** -> **Screen Configuration** and set the parameters. Click **Save** to save the settings.

Note: For better performance, we suggest you to use the default parameters.

The parameters descriptions are as follows:

Screen Position: Select the screen's position on the device.

If select **Exit** from the drop-down list, the screen will be installed at the exit position of the device.

Screen Model: Select the screen model from the drop-down list.

Font Size: Select the text font size in the screen.

Text Orientation: Select the text orientation on the screen.

Line Spacing: Set the space between two lines.

Word Spacing: Set the space between two words.

Initial Position: Set the first character's position displayed on the screen.

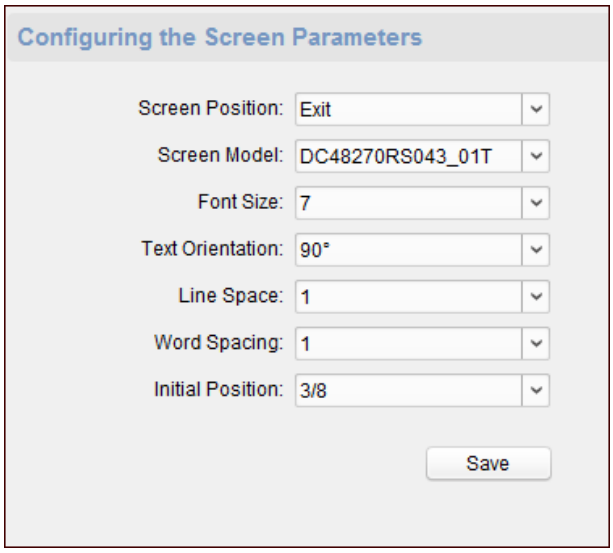

Configuring People Counting Parameters

Purpose:

You can set the people counting's parameters and after the configuration.

Click **System** -> **People Counting** and set the parameters. Click **Save** to save the settings.

The parameters descriptions are as follows:

Clear People Number: Click **Clear** and the counted people number will be restored to zero.

Device People Counting: Click **Enable** or **Disable** to enable or disable the people counting function.

Offline People Counting on Client: Click **Enable** or **Disable** to enable or disable function of the offline people counting on the client.

If enabling the function and if the device is offline, the device will continue counting the people and the number will be stored in the device. When the device is online, the client will read the updated number from the device automatically.

People Counting Type: You can select from Invalid, By IR Detection, and By Authentication Number.

None: The device will not count people.

If the device people counting function is enabled, the people counting function is still disabled.

By IR Detection: The device will count the people who passing through the device depending on the IR detection.

By Authentication Number: The device will count the people who authenticating on the device.

The failed authentication will also count as once.

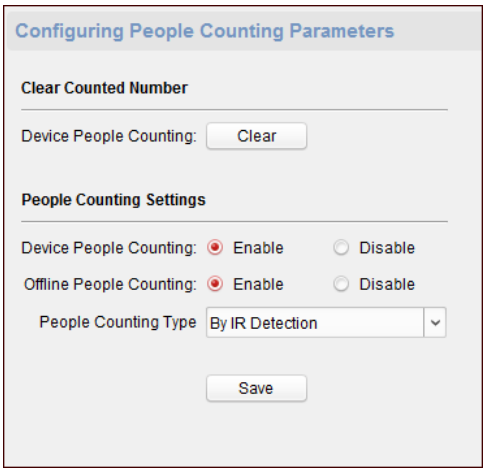

Configuring Network Parameters

Click **Network** -> **General**. You can configure the NIC type, the IPv4 address, the subnet mask (IPv4), the default gateway (IPv4), MTU address, and the device port. Click **Save** to save the settings.

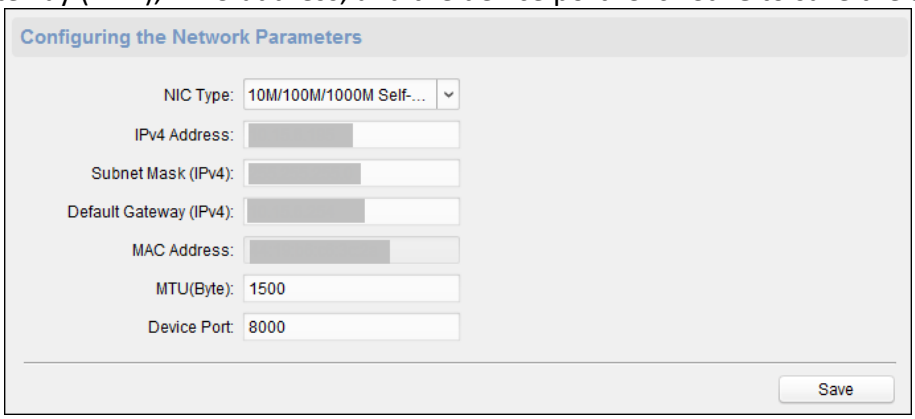

Configuring Advanced Network

Click **Network** -> **Advanced Settings**. You can configure the DNS 1 IP address and the DNS 2 IP address. Click **Save** to save the settings.

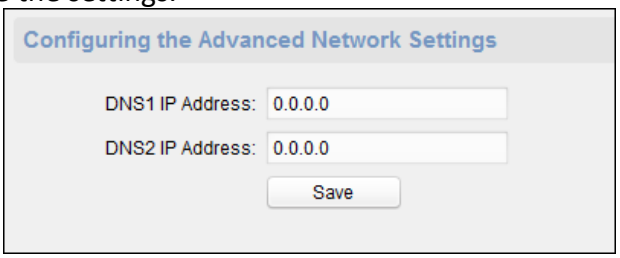

Configuring Relay Parameters

Purpose:

Set the main controller alarm output's relay parameters.

Steps:

1. Click **Alarm** -> **Trigger**.
   You can view the trigger parameters.

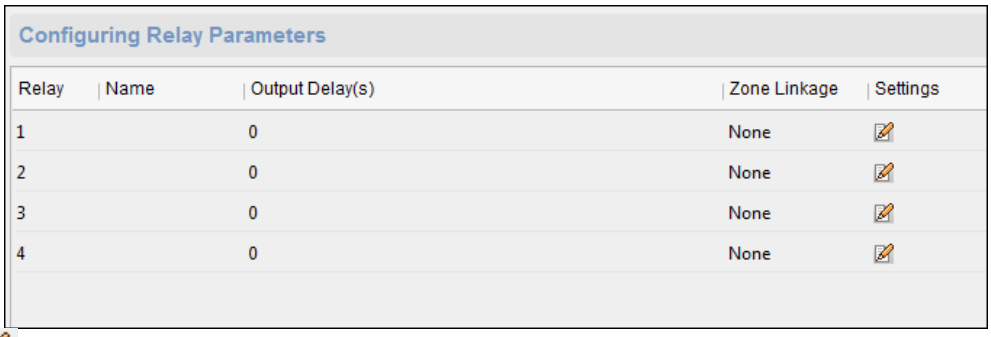

2. Click to pop up the Trigger Parameters Settings window.
3. Set the trigger name and the output delay.
4. Click **Save** to save the paramters.
   Or click **Copy to…** to copy the relay information to other relays.

Configuring Audio File

Purpose:

You can relate the audio file to the corresponding playing scene. You can also export the audio file from the system and impor the audio file from the local.

Steps:

1. Click **Other** -> **Audio File** to enter the Audio File page.
   Note: By default, the system contains the audio content. For details about the index related audio content, see *Appendix BAppendix C Table of Audio Index Related Content.*

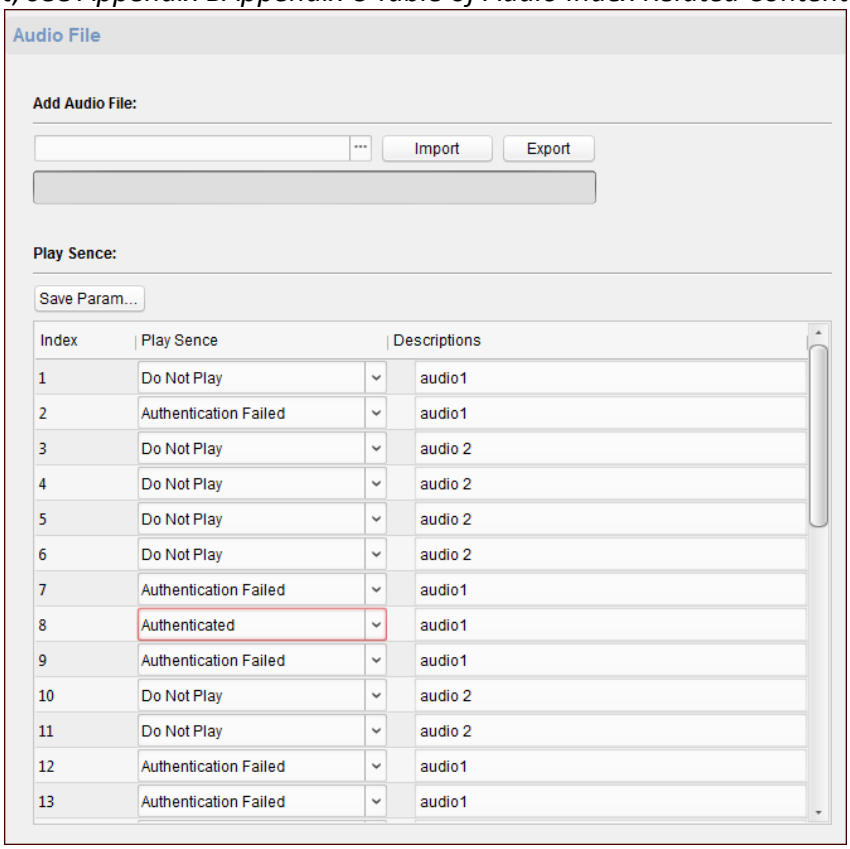

2. Select the index (the playing content) corresponded play scene.
3. (Optional) Input the descrptions of the play scene.

4. Click **Save Parameters** to save the relationship between the index (the playing content) and the play scene.
5. (Optional) Click **Export** to export the default audio file to the local computer.
6. (Optional) Clic and select audio file from the local computer. Click **Import** to import the file to the device.

   Notes:
   - The imported audio file should be in MEM format.
   - For details about converting other format of the audio file to MEM format, see the audio conversion manual.

Operating Relay

Purpose:

Open or close the device main controller alarm output's relay.

Steps:

1. Click **Operation** -> **Relay**.
   You can view the relay status.
2. Check the relay checkbox.
3. Click **Open** or **Close** to open or close the relay.
4. (Optional) Click **Refresh** to refresh the relay status.

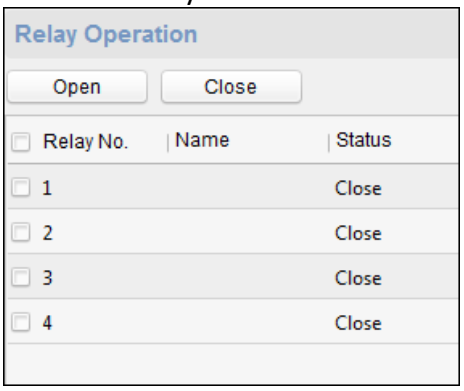

Viewing Relay Status

Click **Status** -> **Relay** to view the relay status.

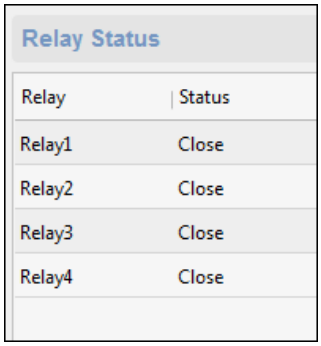

7.3 Organization Management

You can add, edit, or delete the organization as desired.

Click tab to enter the Person and Card Management interface.

7.3.1 Adding Organization

Steps:

1. In the organization list on the left, you should add a top organization as the parent organization of all organizations.
   Click **Add** button to pop up the adding organization interface.

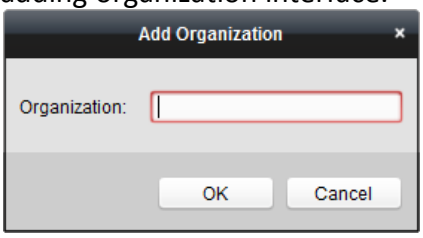

2. Input the Organization Name as desired.
3. Click **OK** to save the adding.
4. You can add multiple levels of organizations according to the actual needs.
   To add sub organizations, select the parent organization and click **Add**.
   Repeat *Step 2* and *3* to add the sub organization.
   Then the added organization will be the sub-organization of the upper-level organization.

Note: Up to 10 levels of organizations can be created.

7.3.2 Modifying and Deleting Organization

You can select the added organization and click **Modify** to modify its name.
You can select an organization, and click **Delete** button to delete it.

Notes:

- The lower-level organizations will be deleted as well if you delete an organization.
- Make sure there is no person added under the organization, or the organization cannot be deleted.

7.4 Person Management

After adding the organization, you can add person to the organization and manage the added person such as issuing cards in batch, importing and exporting person information in batch, etc.

Note: Up to 10,000 persons or cards can be added.

7.4.1 Adding Person

Adding Person (Basic Information)

Steps:

1. Select an organization in the organization list and click **Add** button on the Person panel to pop up the adding person dialog.

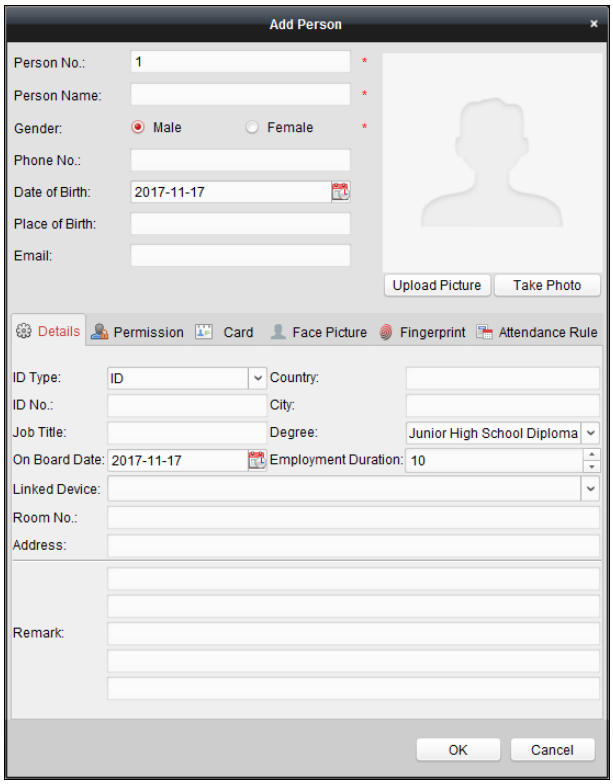

2. The Person No. will be generated automatically and is not editable.
3. Input the basic information including person name, gender, phone No., birthday details, and email address.
4. Click **Upload Picture** to select the person picture from the local PC to upload it to the client.
   Note: The picture should be in *.jpg format.
5. (Optional) You can also click **Take Phone** to take the person's photo with the PC camera.
6. Click **OK** to finish adding.

Adding Person (Detailed Information)

Steps:

1. In the Add Person interface, click **Details** tab.

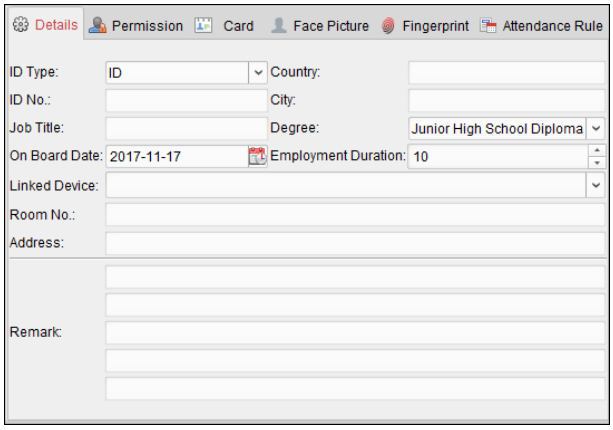

2. Input the detailed information of the person, including person's ID type, ID No., country, etc., according to actual needs.
   - **Linked Device:** You can bind the indoor station to the person.

Note: If you select **Analog Indoor Station** in the Linked Device, the **Door Station** field will display and you are required to select the door station to communicate with the analog indoor station.

- **Room No.:** You can input the room No. of the person.

3. Click **OK** to save the settings.

Adding Person (Permission)

You can assign the permissions (including operation permissions of access control device and access control permissions) to the person when adding person.

Note: For setting the access control permission, refer to *Chapter 7.5 Permission Configuration.*

Steps:

1. In the Add Person interface, click **Permission** tab.

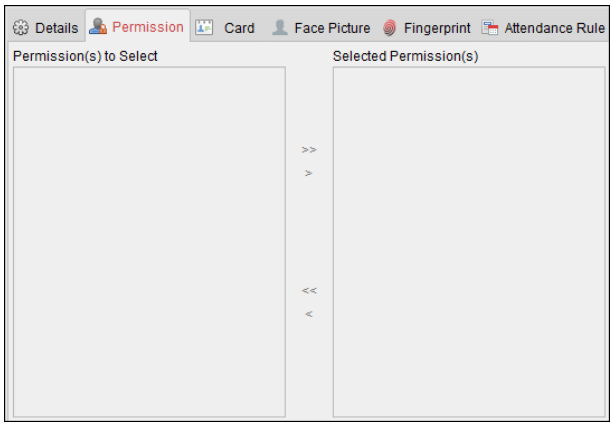

2. In the Device Operation Role field, select the role of operating the access control device.
   Normal User: The person has the permission to check-in/out on the device, pass the access control point, etc.
   Administrator: The person has the normal user permission, as well as permission to configure the device, including adding normal user, etc.
3. In the Permission(s) to Select list, all the configured permissions display.
   Check the permission(s) checkbox(es) and click **>** to add to the Selected Permission(s) list.
   (Optional) You can click **>>** to add all the displayed permissions to the Selected Permission(s) list.
   (Optional) In the Selected Permission(s) list, select the selected permission and click **<** to remove it. You can also click **<<** to remove all the selected permissions.
4. Click **OK** to save the settings.

Adding Person (Card)

You can add card and issue the card to the person.

➢ **Adding General Card**

Steps:

1. In the Add Person interface, click **Card** tab.

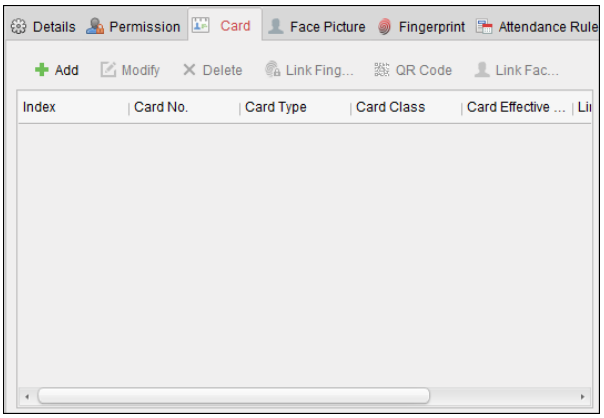

2. Click **Add** to pop up the Add Card dialog.
3. Click **Card** to enter the Card tab.

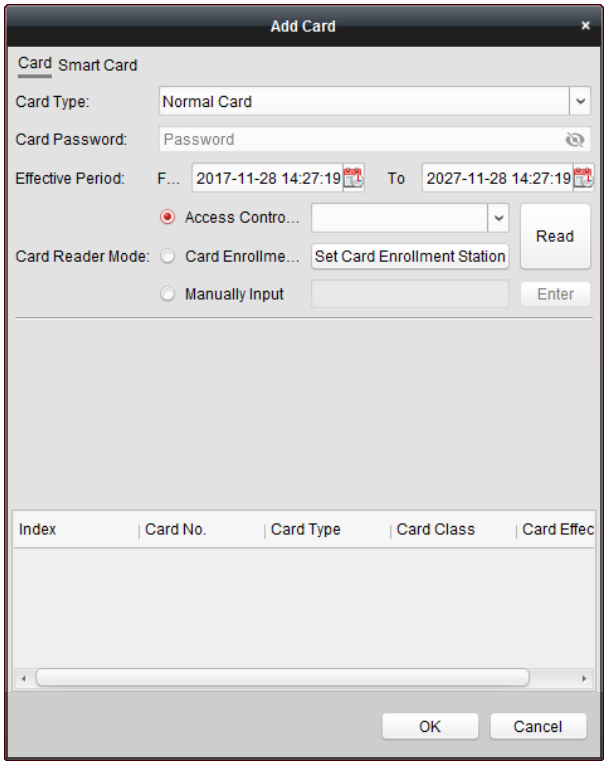

4. Select the card type according to actual needs.
   - **Normal Card**
   - **Card for Disabled Person**: The door will remain open for the configured time period for the card holder.
   - **Card in Blacklist**: The card swiping action will be uploaded and the door cannot be opened.
   - **Patrol Card**: The card swiping action can used for checking the working status of the inspection staff. The access permission of the inspection staff is configurable.
   - **Duress Card**: The door can open by swiping the duress card when there is duress. At the same time, the client can report the duress event.
   - **Super Card**: The card is valid for all the doors of the controller during the configured schedule.

- **Visitor Card**: The card is assigned for visitors. For the Visitor Card, you can set the **Max. Swipe Times**.

  Notes:
  - The Max. Swipe Times should be between 0 and 255. When setting as 0, it means the card swiping is unlimited.
  - Up to 3000 visitor cards can be added.

5. Input the password of the card itself in the Card Password field. The card password should contain 4 to 8 digits.

   Note: The password will be required when the card holder swiping the card to get enter to or exit from the door if you enable the card reader authentication mode as **Card and Password**, **Password and Fingerprint**, and **Card, Password, and Fingerprint**. For details, *Chapter 7.6.2 Card Reader Authentication.*
6. Click to set the effective time and expiry time of the card.
7. Select the Card Reader Mode for reading the card No.
   - **Access Controller Reader:** Place the card on the reader of the Access Controller and click **Read** to get the card No.
   - **Card Enrollment Station:** Place the card on the Card Enrollment Station and click **Read** to get the card No.

     Note: The Card Enrollment Station should connect with the PC running the client. You can click **Set Card Enrollment Station** to enter the following dialog.

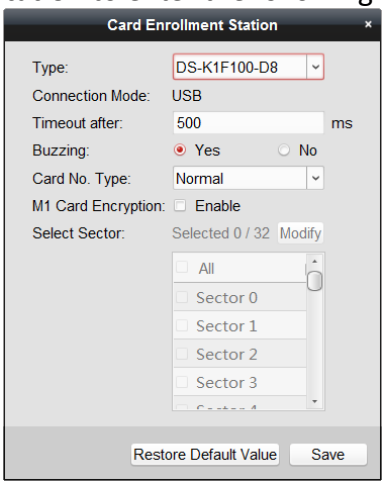

     1) Select the Card Enrollment Station type.

        Note: Currently, the supported card reader types include DS-K1F100-D8, DS-K1F100-M, DS-K1F100-D8E, and DS-K1F180-D8E.
     2) Set the serial port No., the baud rate, the timeout value, the buzzing, or the card No. type.

        If the card is M1 card, and if you need to enable the M1 Card Encryption function, you should check **Enable** checkbox of M1 Card Encryption and click **Modify** to select the sector.
     3) Click **Save** button to save the settings.

     You can click **Restore Default Value** button to restore the defaults.
   - **Manually Input:** Input the card No. and click **Enter** to input the card No.
8. Click **OK** and the card(s) will be issued to the person.

9. (Optional) You can select the added card and click **Modify** or **Delete** to edit or delete the card.
10. (Optional) You can generate and save the card QR code for QR code authentication.
    1) Select an added card and click **QR Code** to generate the card QR code.
    2) In the QR code pop-up window, click **Download** to save the QR code to the local PC.
       You can print the QR code for authentication on the specified device.
       Note: The device should support the QR code authentication function. For details about setting the QR code authentication function, see the specified device user manual.
11. (Optional) You can click **Link Fingerprint** to link the card with the person's fingerprint, so that the person can place the finger on the scanner instead of swiping card when passing the door.
12. (Optional) You can click **Link Face Picture** to link the card with the face picture, so that the person can pass the door by scanning the face via the device instead of swiping card when passing the door.
13. Click **OK** to save the settings.

➢ **Adding Smart Card**

Purpose:

You can store fingerprints and ID card infomration in the smart card. When authenticating, after swiping the smart card on the device, you can scan your fingerprint or swipe your ID card on the device. The device will compare the fingerperint or ID card information in the smart card with the ones collected. If you use the smart card for authentication, there is no need to store the fingerprints or ID card information in the device in advance.

Steps:

1. In the Add Person page, set the person basic information.
2. Click **Card** to enter the card tab.
3. Click **Add** to pop up the Add Card dialog.
4. Click **Smart Card** to enter the Smart Card tab.

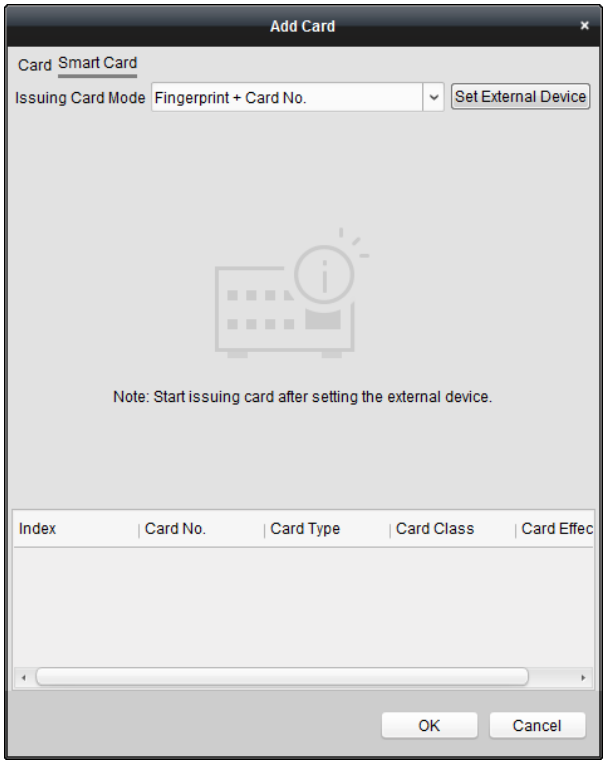

5. Select an issuing card mode from the dropdown list.
6. Set the external device.
   1) Click **Set External Device** to enter the Set External Device page.
   2) (Optional) Select the issuing card mode again.
   3) Set a card enrollment station.
   4) If you select "Fingerprint + Card No." as the issuing mode, set the fingerprint recorder model.
      If you select "ID Card No. + Card No." as the issuing mode, set the ID card reader model.
      If you select "Fingerprint + ID Card No. + Card No." as the issuing mode, set the fingerprint recorder model and the ID card reader model.
   5) Click **OK** save the settings.
7. Select a card type for the smart card.
   - **Normal Card**
   - **Card for Disabled Person**: The door will remain open for the configured time period for the card holder.
   - **Card in Blacklist:** The card swiping action will be uploaded and the door cannot be opened.
   - **Patrol Card:** The card swiping action can used for checking the working status of the inspection staff. The access permission of the inspection staff is configurable.
   - **Duress Card:** The door can open by swiping the duress card when there is duress. At the same time, the client can report the duress event.
   - **Super Card:** The card is valid for all the doors of the controller during the configured schedule.
   - **Visitor Card:** The card is assigned for visitors. For the Visitor Card, you can set the Max. Swipe Times.
     Notes:
     - The Max. Swipe Times should be between 0 and 255. When setting as 0, it means the card swiping is unlimited.
     - Up to 3000 visitor cards can be added.
8. Set other parameters of the card.
   1) Set the card password.
   2) Set the card effective date.
   3) Scan your fingerprint and swipe your ID card according to the promt.
   4) Swipe the smart card.
      The added card information will display in the list below.
9. Click **OK** and the card(s) will be issued to the person.
10. (Optional) Select the added card and click **Modify** or **Delete** to edit or delete the card.
11. (Optional) Generate and save the card QR code for QR code authentication.
    1) Select an added card and click **QR Code** to generate the card QR code.
    2) In the QR code pop-up window, click **Download** to save the QR code to the local PC.
       You can print the QR code for authentication on the specified device.
       Note: The device should support the QR code authentication function. For details about setting the QR code authentication function, see the specified device user manual.
12. (Optional) Click **Link Fingerprint** to link the card with the person's fingerprint, so that the person can place the finger on the scanner instead of swiping card when passing the door.

13. (Optional) Click **Link Face Picture** to link the card with the face picture, so that the person can pass the door by scanning the face via the device instead of swiping card when passing the door.
14. Click **OK** to save the settings.

Adding Person (Face Picture)

You can collect the face picture in two ways: Local Collection and Remote Collection.

- **Local Collection:** Collect the face picture via face picture scanner.
- **Remote Collection:** Collect the face picture via the access control terminal.
  Note: The access control terminal should support face recognition function.

Steps:

1. In the Add Person interface, click **Face Picture** tab

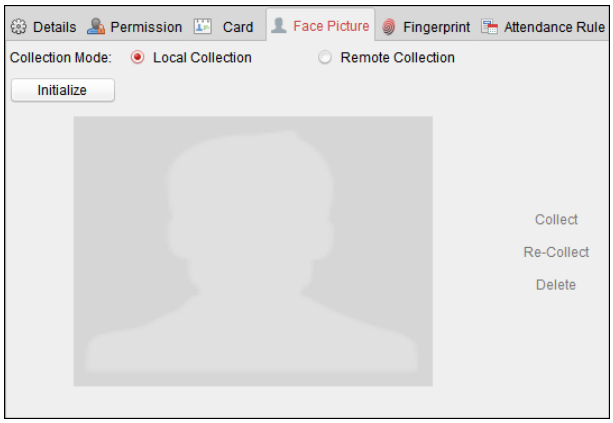

2. To get the face picture via face picture scanner:
   1) Select **Local Collection**.
   2) Connect the face picture scanner to the PC running the client.
   3) Select the device type.
      Note: Currently, the face picture scanner of DS2CS5432B-S is supported.
   4) (Optional) You can click **Initialize** to initialize the face picture scanner.
3. To get the face picture via access control terminal:
   1) Select **Remote Collection**.
   2) Click **Select Device** to select the access control terminal which supports face recognition function.
4. Click **Collect** to capture the face picture.
   You can click **Re-Collect** the captured picture again.
   You can click **Delete** to delete the captured picture.
5. Click **OK** to save the settings.

Adding Person (Fingerprint)

Steps:

1. In the Add Person interface, click **Fingerprint** tab.

2. Select **Local Collection** as desired.
3. Before inputting the fingerprint, you should connect the fingerprint machine to the PC and set its parameters first.
   Click **Set Fingerprint Machine** to enter the following dialog box.

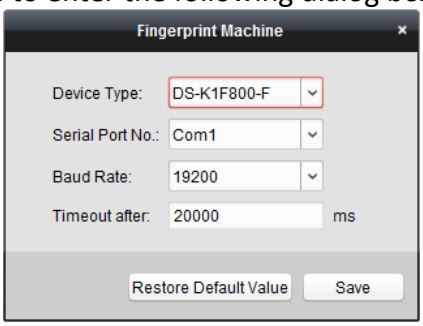

   1) Select the device type.
      Currently, the supported fingerprint machine types include DS-K1F800-F, DS-K1F810-F, DS-K1F820-F, and DS-K1F181-F.
   2) For fingerprint machine type DS-K1F800-F, you can set the serial port number, baud rate, and overtime parameters of the fingerprint machine.
   3) Click **Save** button to save the settings.
      You can click **Restore Default Value** button to restore the default settings.

   Notes:
   - The serial port number should correspond to the serial port number of PC. You can check the serial port number in Device Manager in your PC.
   - The baud rate should be set according to the external fingerprint card reader. The default value is 19200.
   - **Timeout after** field refers to the valid fingerprint collecting time. If the user does not input a fingerprint or inputs a fingerprint unsuccessfully, the device will indicate that the fingerprint collecting is over.
4. Click **Start** button, click to select the fingerprint to start collecting.
5. Lift and rest the corresponding fingerprint on the fingerprint scanner twice to collect the fingerprint to the client.
6. (Optional) You can also click **Remote Collection** to collect fingerprint from the device.
   Note: The function should be supported by the device.
7. (Optional) You can select the registered fingerprint and click **Delete** to delete it.

You can click **Clear** to clear all fingerprints.

8. Click **OK** to save the fingerprints.

Adding Person (Attendance Rule)

You can set the attendance rule for the person.

Note: This tab page will display when you select **Non-Residence** mode in the application scene when running the software for the first time.

Steps:

1. In the Add Person interface, click **Attendance Rule** tab.

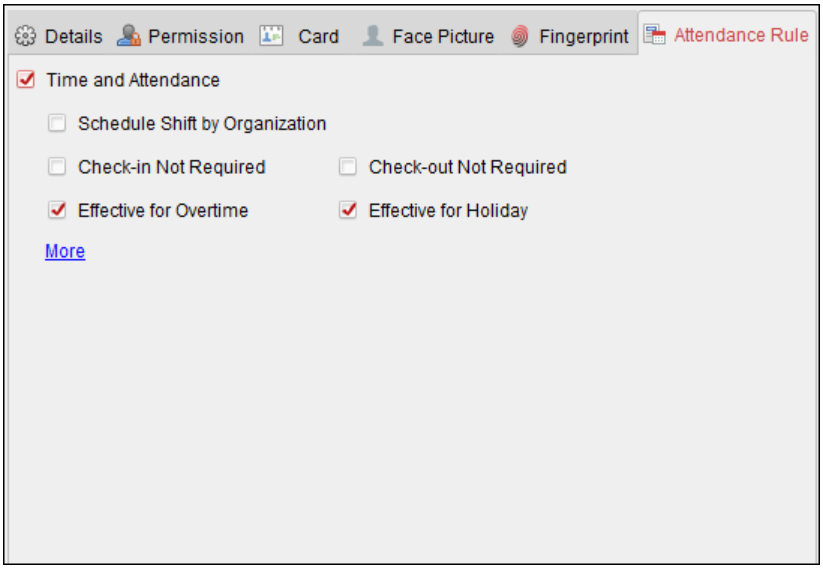

2. If the person joins in the time and attendance, check the **Time and Attendance** checkbox to enable this function for the person. Then the person's card swiping records will be recorded and analyzed for time and attendance.
   For details about Time and Attendance, click **More** to go to the Time and Attendance module.
3. Click **OK** to save the settings.

Importing and Exporting Person Information

The person information can be imported and exported in batch.

Steps:

1. **Exporting Person:** You can export the added persons' information in Excel format to the local PC.
   1) After adding the person, you can click **Export Person** button in the Person and Card tab to pop up the following dialog.
   2) Click ... to select the path of saving the exported Excel file.
   3) Check the checkboxes to select the person information to export.

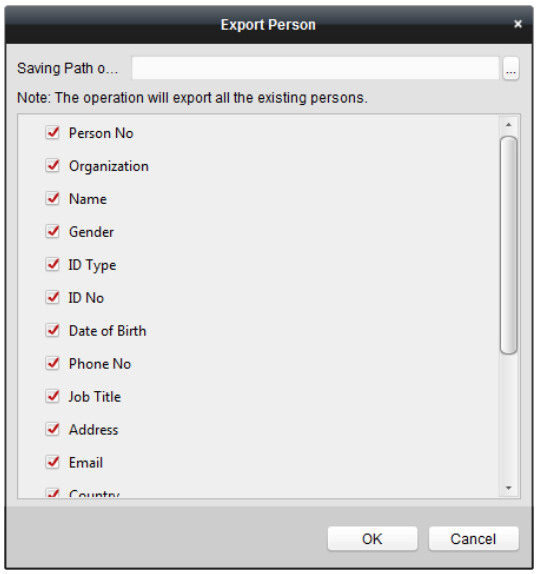

4) Click **OK** to start exporting.

2. **Importing Person:** You can import the Excel file with persons information in batch from the local PC
   1) click **Import Person** button in the Person and Card tab.

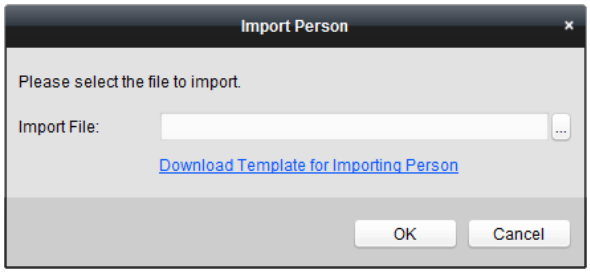

   2) You can click **Download Template for Importing Person** to download the template first.
   3) Input the person information to the downloaded template.
   4) Click ... to select the Excel file with person information.
   5) Click **OK** to start importing.

Getting Person Information from Access Control Device

If the added access control device has been configured with person information (including person details, fingerprint, issued card information), you can get the person information from the device and import to the client for further operation.

Note: This function is only supported by the device the connection mothod of which is TCP/IP when adding the device.

Steps:

1. In the organization list on the left, click to select an organization to import the persons.
2. Click **Get Person** button to pop up the following dialog box.

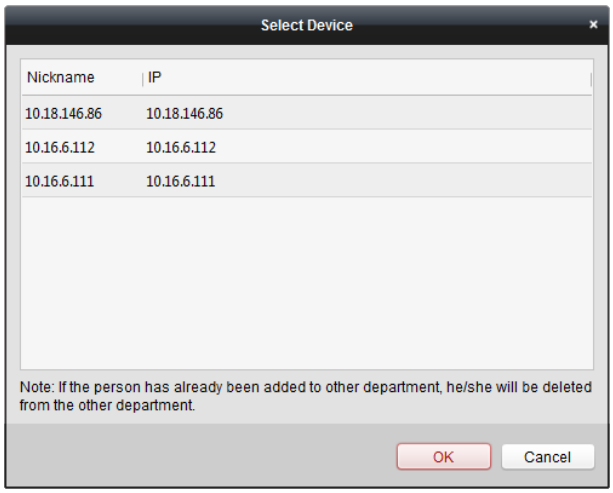

3. The added access control device will be displayed.
4. Click to select the device and then click **OK** to start getting the person information from the device.
   You can also double click the device name to start getting the person information.

Notes:

- The person information, including person details, person's fingerprint information (if configured), and the linked card (if configured), will be imported to the selected organization.
- If the person name stored in the device is empty, the person name will be filled with the issued card No. after importing to the client.
- The gender of the persons will be **Male** by default.
- Up to 10000 persons can be imported.

7.4.2 Managing Person

Modifying and Deleting Person

To modify the person information and attendance rule, click or in the Operation column, or select the person and click **Modify** to open the editing person dialog.
You can click to view the person's card swiping records.
To delete the person, select a person and click **Delete** to delete it.
Note: If a card is issued to the current person, the linkage will be invalid after the person is deleted.

Changing Person to Other Organization

You can move the person to another organization if needed.

Steps:

1. Select the person in the list and click **Change Organization** button.

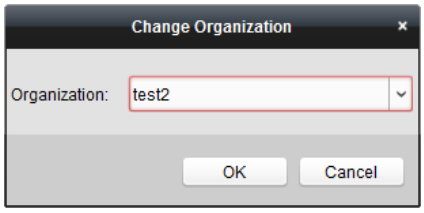

2. Select the organization to move the person to.
3. Click **OK** to save the settings.

Searching Person

You can input the keyword of card No. or person name in the search field, and click **Search** to search the person.
You can input the card No. by clicking **Read** to get the card No. via the connected card enrollment station.
You can click **Set Card Enrollment Station** in the dropdown list to set the parameters.

7.4.3 Issuing Card in Batch

You can issue multiple cards for the person with no card issued in batch.
Steps:

1. Click **Issue Card in Batch** button to enter the following dialog.
   All the added person with no card issued will display in the Person(s) with No Card Issued list.

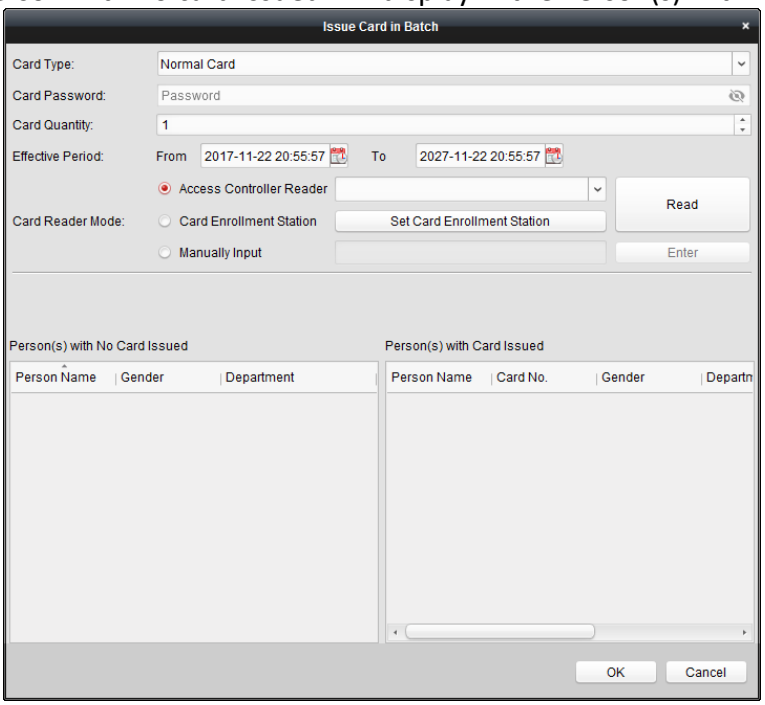

2. Select the card type according to actual needs.
   Note: For details about the card type, refer to *Adding Person.*
3. Input the password of the card itself in the Card Password field. The card password should contain 4 to 8 digits.
   Note: The password will be required when the card holder swiping the card to get enter to or exit from the door if you enable the card reader authentication mode as **Card and Password**, **Password and Fingerprint**, and **Card, Password, and Fingerprint**. For details, refer to *Chapter 7.6.2 Card Reader Authentication.*
4. Input the card quantity issued for each person.
   For example, if the Card Quantity is 3, you can read or enter three card No. for each person.

5. Click to set the effective time and expiry time of the card.
6. In the Person(s) with No Card Issued list on the left, select the person to issue card.
   Note: You can click on the Person Name, Gender, and Department column to sort the persons according to actual needs.
7. Select the Card Reader Mode for reading the card No.
   - **Access Controller Reader:** Place the card on the reader of the Access Controller and click **Read** to get the card No.
   - **Card Enrollment Station:** Place the card on the Card Enrollment Station and click **Read** to get the card No.
     Note: The Card Enrollment Station should connect with the PC running the client. You can click **Set Card Enrollment Station** to enter the following dialog.

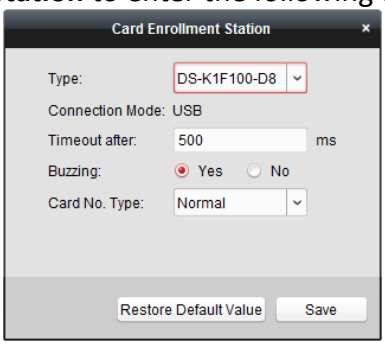

     1) Select the Card Enrollment Station type.
        Note: Currently, the supported card reader types include DS-K1F100-D8, DS-K1F100-M, DS-K1F100-D8E, and DS-K1F180-D8E.
     2) Set the parameters about the connected card enrollment station.
        If the card is M1 card, and if you need to enable the M1 Card Encryption function, you should check **Enable** checkbox of M1 Card Encryption and click **Modify** to select the sector.
     3) Click **Save** button to save the settings.
        You can click **Restore Default Value** button to restore the defaults.
   - **Manually Input:** Input the card No. and click **Enter** to input the card No.
8. After issuing the card to the person, the person and card information will display in the Person(s) with Card Issued list.
9. Click **OK** to save the settings.

7.5 Permission Configuration

In Permission Configuration module, you can add, edit, and delete the access control permission, and then apply the permission settings to the device to take effect.

Click icon to enter the Access Control Permission interface.

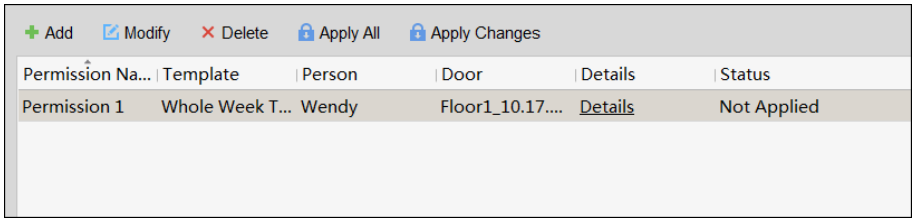

7.5.1 Adding Permission

Purpose:

You can assign permission for persons to enter/exist the access control points (doors) in this section.

Notes:

- You can add up to 4 permissions to one access control point of one device.
- You can add up to 128 permissions in total.

Steps:

1. Click **Add** icon to enter following interface.

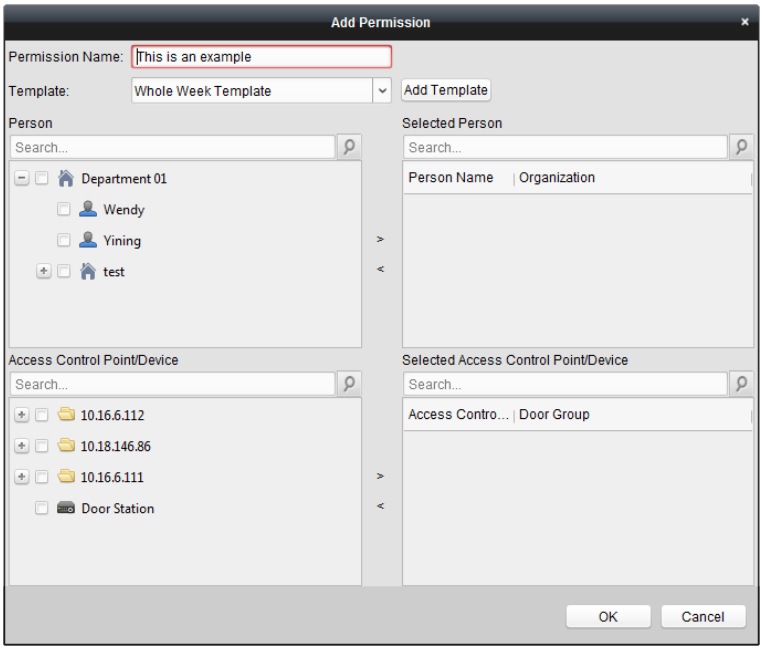

2. In the Permission Name field, input the name for the permission as desired.
3. Click on the dropdown menu to select a template for the permission.
   Note: You should configure the template before permission settings. You can click **Add Template** button to add the template.
4. In the Person list, all the added persons display.
   Check the checkbox(es) to select person(s) and click **>** to add to the Selected Person list.
   (Optional) You can select the person in Selected Person list and click **<** to cancel the selection.
5. In the Access Control Point/Device list, all the added access control points (doors) and door stations will display.
   Check the checkbox(es) to select door(s) or door station(s) and click **>** to add to the selected list.
   (Optional) You can select the door or door station in the selected list and click **<** to cancel the selection.
6. Click **OK** button to complete the permission adding. The selected person will have the permission to enter/exit the selected door/door station with their linked card(s) or fingerprints.
7. (Optional) after adding the permission, you can click **Details** to modify it. Or you can select the permission and click **Modify** to modify.

You can select the added permission in the list and click **Delete** to delete it.

7.5.2 Applying Permission

Purpose:

After configuring the permissions, you should apply the added permission to the access control device to take effect.

Steps:

1. Select the permission(s) to apply to the access control device.
   To select multiple permissions, you can hold the *Ctrl* or *Shift* key and select permissions.
2. Click **Apply All** to start applying all the selected permission(s) to the access control device or door station.
   You can also click **Apply Changes** to apply the changed part of the selected permission(s) to the device(s).
3. The following window will pop up, indicating the applying permission result.

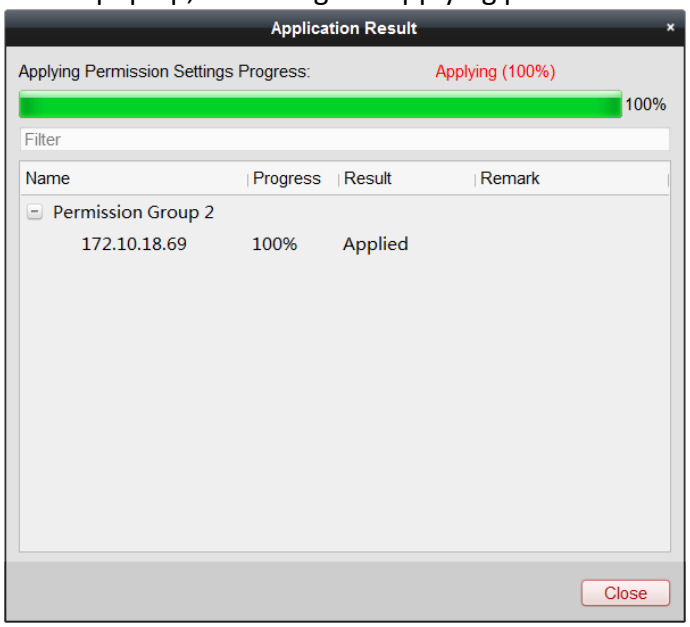

Notes:

- When the permission settings are changed, the following hint box will pop up.

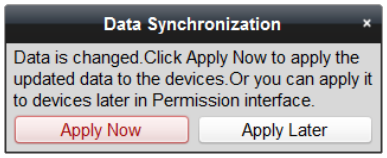

  You can click **Apply Now** to apply the changed permissions to the device.
  Or you can click **Apply Later** to apply the changes later in the Permission interface.
- The permission changes include changes of schedule and template, permission settings, person's permission settings, and related person settings (including card No., fingerprint, face picture, linkage between card No. and fingerprint, linkage between card No. and fingerprint, card password, card effective period, etc).

7.6 Advanced Functions

Purpose:

After configuring the person, template, and access control permission, you can configure the advanced functions of access control application, such as access control parameters, authentication password, and opening door with first card, anti-passing back, etc.

Note: The advanced functions should be supported by the device.

Click icon to enter the following interface.

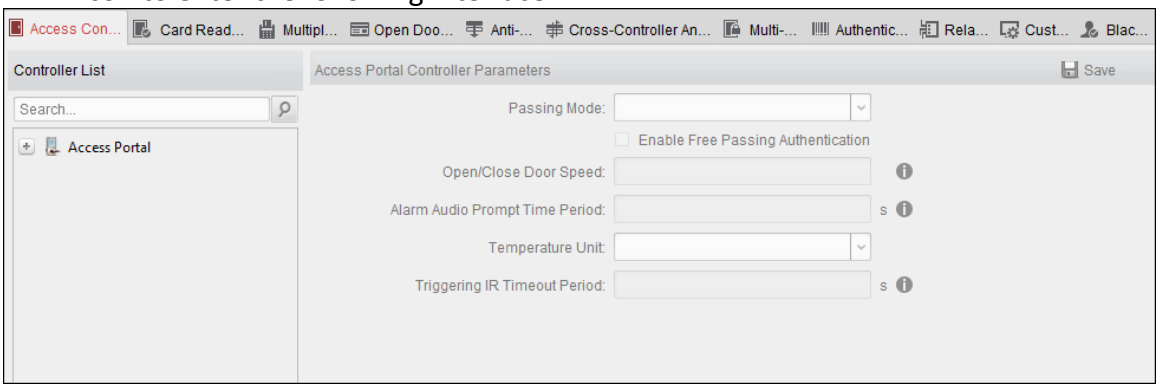

7.6.1 Access Control Parameters

Purpose:

After adding the access control device, you can configure its access control point (door)'s parameters, and its card readers' parameters.

Click **Access Control Parameters** tab to enter the parameters settings interface.

Door Parameters

Steps:

1. In the controller list on the left, click to expand the access control device, select the door (access control point) and you can edit the information of the selected door on the right.

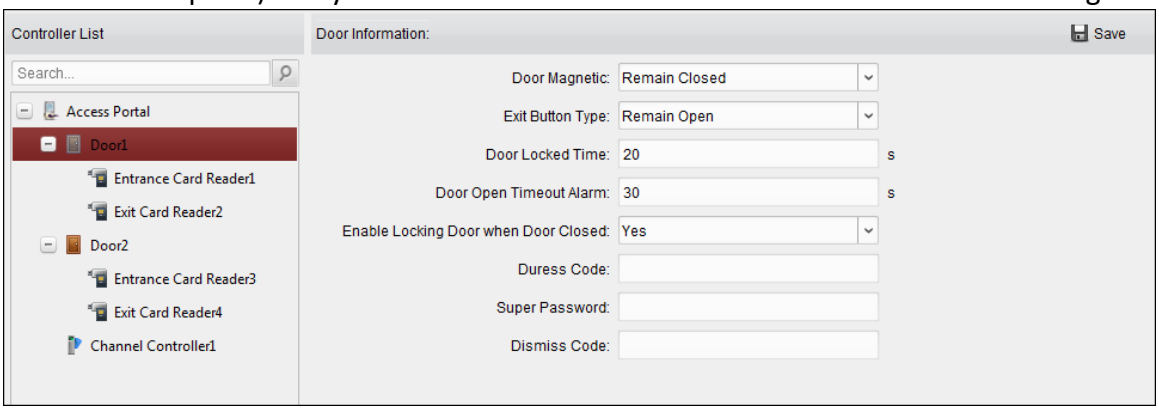

2. You can edit the following parameters:
   - **Door Magnetic**: The Door Magnetic is in the status of **Remain Closed** (excluding special conditions).
   - **Exit Button Type**: The Exit Button Type is in the status of **Remain Open** (excluding special

conditions).

- **Door Locked Time**: After swiping the normal card and relay action, the timer for locking the door starts working.
- **Door Open Timeout Alarm**: The alarm can be triggered if the door has not been close
- **Enable Locking Door when Door Closed**: The door can be locked once it is closed even if the Door Locked Time is not reached.
- **Duress Code**: The door can open by inputting the duress code when there is duress. At the same time, the client can report the duress event.
- **Super Password:** The specific person can open the door by inputting the super password.
- **Dismiss Code:** Input the dismiss code to stop the buzzer of the card reader.

Notes:

- The duress code, Super password, and dismiss code should be different.
- The duress code, super password, and the dismiss code should be different from the authentication password.
- The duress code, super password, and the dismiss code should contain 4 to 8 numerics.

3. Click **Save** button to save parameters.

Card Reader Parameters

Steps:

1. In the device list on the left, click to expand the door, select the card reader name and you can edit the card reader parameters on the right.

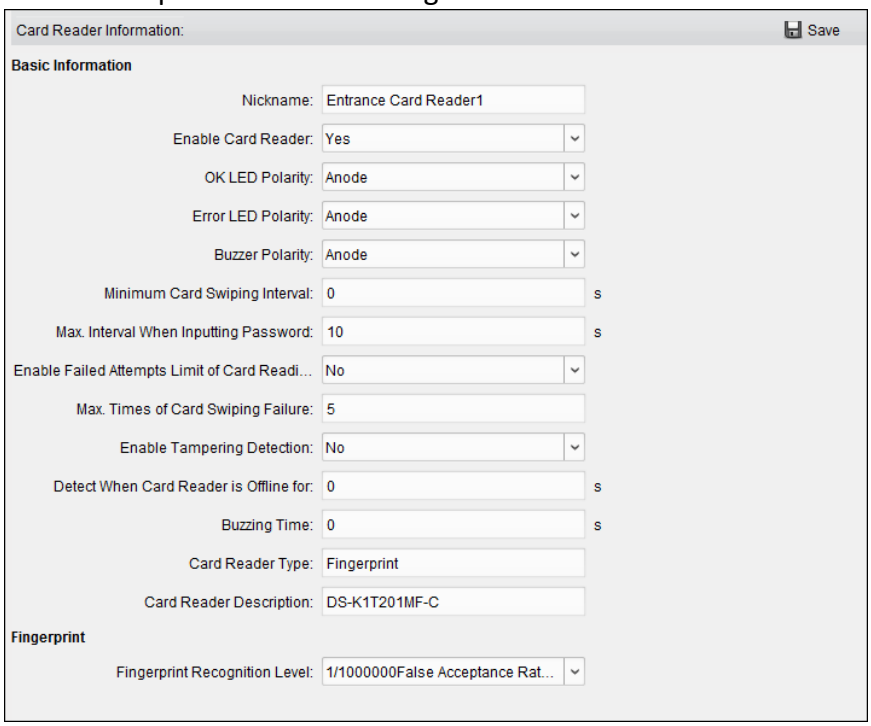

2. You can edit the following parameters:
   - **Nickname:** Edit the card reader name as desired.
   - **Enable Card Reader:** Select **Yes** to enable the card reader.
   - **OK LED Polarity:** Select the OK LED Polarity of the card reader mainboard.
   - **Error LED Polarity:** Select the Error LED Polarity of the card reader mainboard.

- **Buzzer Polarity:** Select the Buzzer LED Polarity of the card reader mainboard.
- **Minimum Card Swiping Interval:** If the interval between card swiping of the same card is less than the set value, the card swiping is invalid. You can set it as 0 to 255.
- **Max. Interval When Inputting Password:** When you inputting the password on the card reader, if the interval between pressing two digits is larger than the set value, the digits you pressed before will be cleared automatically.
- **Enable Failed Attempts Limit of Card Reading:** Enable to report alarm when the card reading attempts reach the set value.
- **Max. Times of Card Swiping Failure:** Set the max. failure attempts of reading card.
- **Enable Tampering Detection:** Enable the anti-tamper detection for the card reader.
- **Detect When Card Reader is Offline for:** When the access control device cannot connect with the card reader for longer than the set time, the card reader will turn offline automatically.
- **Buzzing Time:** Set the card reader buzzing time. The available time ranges from 0 to 5999s. 0 represents continuous buzzing.
- **Card Reader Type:** Get the card reader's type.
- **Card Reader Description:** Get the card reader description.
- **Fingerprint Recognition Level:** Select the fingerprint recognition level in the dropdown list. By default, the level is Low.

3. Click the **Save** button to save parameters.

Lane Controller Parameters

Steps:

1. In the device list on the left, click to expand the door, select a lane controller and you can edit the lane controller's parameters on the right.

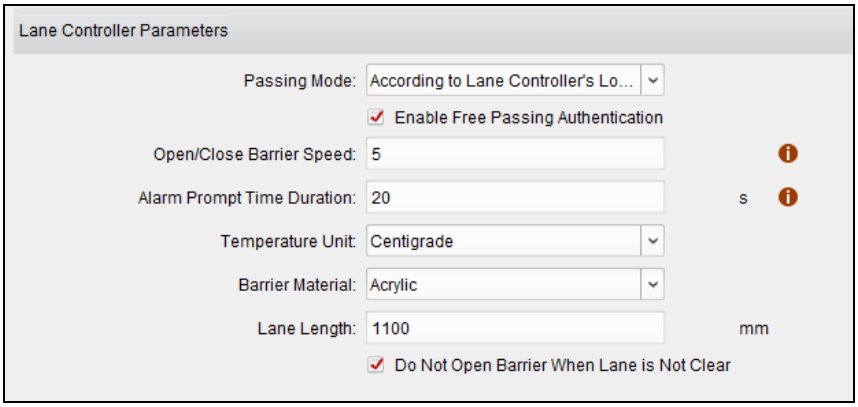

2. You can edit the following parameters:
   - **Passing Mode:** Select the controller which will control the barrier status of the device.
     If select According to Lane Controller's DIP Settings, the device will follow the lane controller's DIP settings to control the barrier. The settings on the software system will be invalid.
     If select According to Main Controller's Settings, the device will follow the settings of the

software system to control the barrier. The DIP settings of the lane controller will be invalid.

Note: For details about setting the barrier status, see *7.9.2 Anti-control the Access Control Point (Door).*

- **Enable Free Passing Authentication:** If check the checkbox, when both entrance and exit's barrier mode is Remain Open, the pedestrians should authenticate each time passing through the lane. Or an alarm will be triggered.
- **Open/Close Door Speed:** Set the barrier's open and close speed. You can select from 1 to 10. The greater the value, the faster the speed.
  Note: The suggested value is 6.
- **Alarm Audio Prompt Time Duration:** Set the alarm audio prompt playing duration.
  Note: 0 refers to the alarm audio will be played until the alarm is ended.
- **Temperature Unit:** Select the temperature unit that displayed in the device status.
  Note: For details about viewing device status, see *7.2.2 Viewing Device Status*.
- **Barrier Material:** Select the material of the barrier gate. You can select the barrier material from the drop-down list.
  Note: This parameter affects the working of the barrier gate. Please correctly set the material according to the actual situation so that the barrier can open and close properly.
- **Lane Length:** The width of the lane. You can set the lane width.
  Note: This parameter affects the working of the barrier gate. Please correctly set the width according to the actual situation so that the barrier can open and close properly.
- **Do Not Open Barrier in Authenticates in Lane:** If there is someone or something in the lane, the gate will not open even if the credential is authenticated.
  This function is designed to avoid more than one person passing through the gate with only one authentication.

3. Click **Save** to save the lane controller's parameters.

7.6.2 Card Reader Authentication

Purpose:

You can set the passing rules for the card reader of the access control device.

Steps:

1. Click **Card Reader Authentication** tab and select a card reader on the left.
2. Click **Configuration** button to select the card reader authentication modes for setting the schedule.

   Notes:

   - The available authentication modes depend on the device type.
   - Password refers to the card password set when issuing the card to the person in *Chapter 7.4 Person Management.*

   1) Select the modes and click » to add to the selected modes list.
      You can click ↑ or ↓ to adjust the display order.

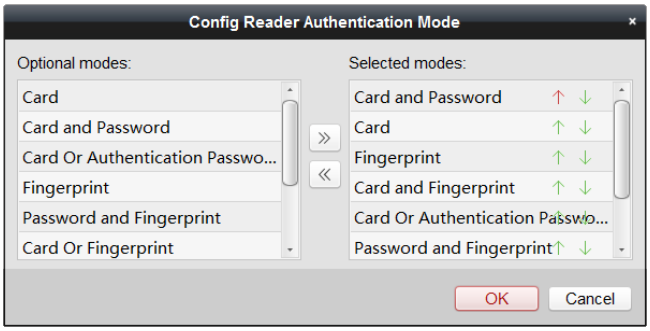

2) Click **OK** to confirm the selection.

3. After selecting the modes, the selected modes will display as icons.
   Click the icon to select a card reader authentication mode.
4. Click and drag your mouse on a day to draw a color bar on the schedule, which means in that period of time, the card reader authentication is valid.

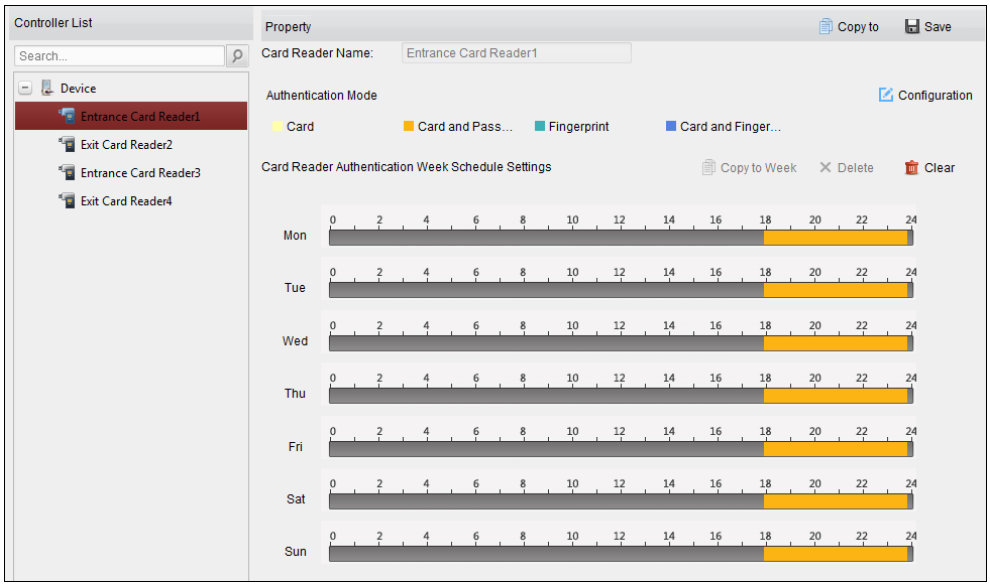

5. Repeat the above step to set other time periods.
   Or you can select a configured day and click **Copy to Week** button to copy the same settings to the whole week.
   (Optional) You can click **Delete** button to delete the selected time period or click **Clear** button to delete all the configured time periods.
6. (Optional) Click **Copy to** button to copy the settings to other card readers.

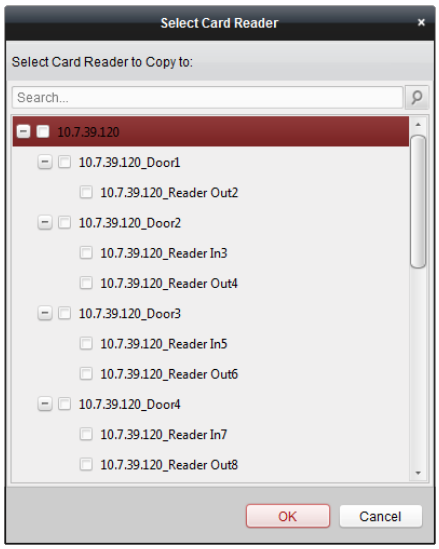

7. Click **Save** button to save parameters.

7.6.3 Multiple Authentication

Purpose:

You can manage the cards by group and set the authentication for multiple cards for one access control point (door).

Note: Please set the card permission and apply the permission setting to the access control device first. For details, refer to *Chapter 7.5 Permission Configuration.*

Steps:

1. Click **Multiple Authentication** tab to enter the following interface.

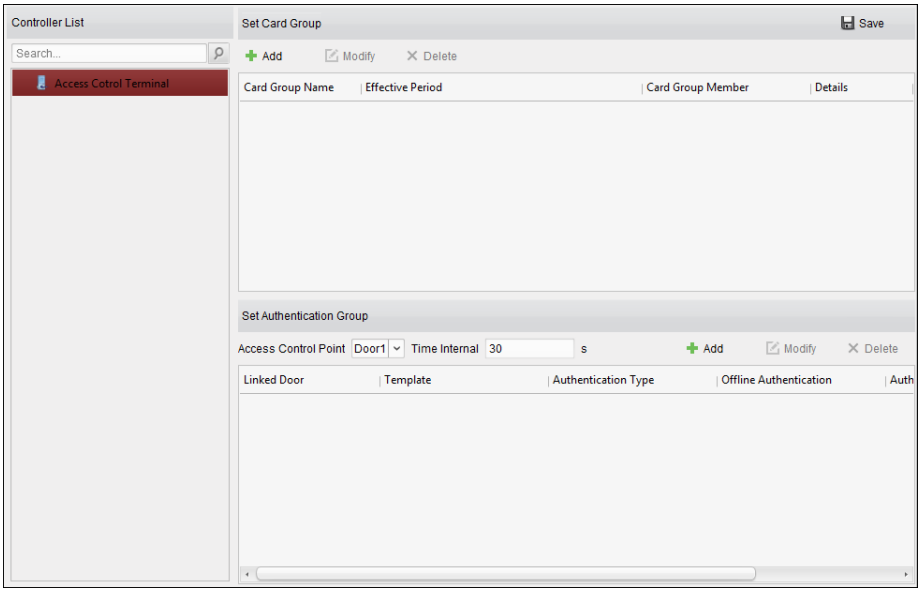

2. Select access control device from the list on the left.
3. In the Set Card Group panel on the right, click **Add** button to pop up the following dialog:

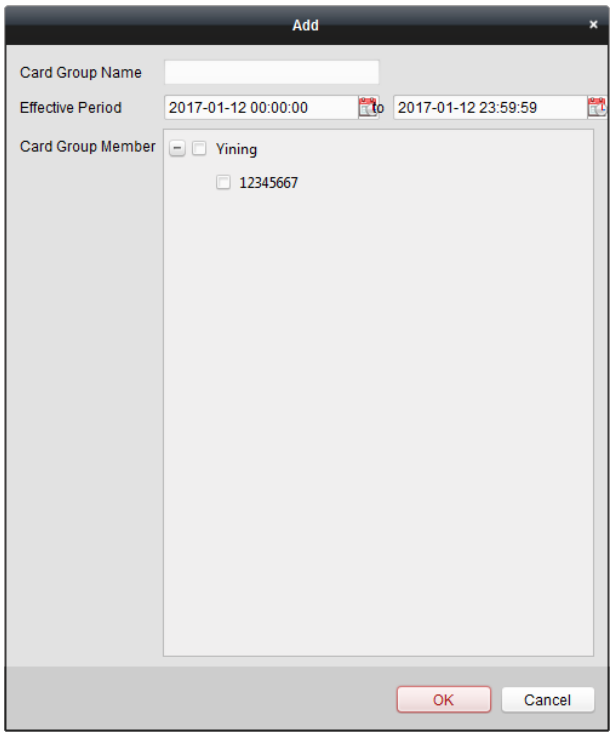

1) In the Card Group Name field, input the name for the group as desired.
2) Click to set the effective time and expiry time of the card group.
3) Check the checkbox(es) to select the card(s) to add the card group.
4) Click **OK** to save the card group.

4. In the Set Authentication Group panel, select the access control point (door) of the device for multiple authentications.
5. Input the time interval for card swiping.
6. Click **Add** to pop up the following dialog.

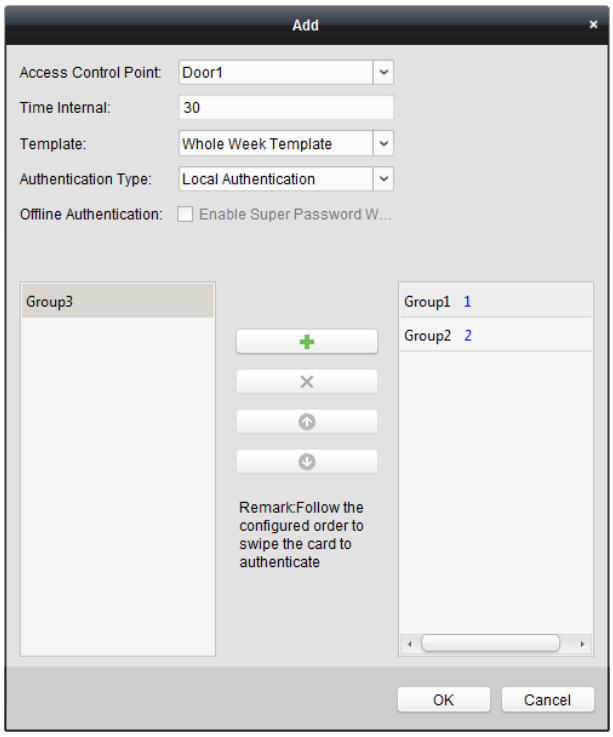

1) Select the template of the authentication group from the dropdown list.
2) Select the authentication type of the authentication group from the dropdown list.
   - **Local Authentication:** Authentication by the access control device.
   - **Local Authentication and Remotely Open Door:** Authentication by the access control device and by the client.
     For Local Authentication and Remotely Open Door type, you can check the checkbox to enable the super password authentication when the access control device is disconnected with the client.
   - **Local Authentication and Super Password:** Authentication by the access control device and by the super password.
3) In the list on the left, the added card group will display. You can click the card group and click ✚ to add the group to the authentication group.
   You can click the added card group and click ✕ to remove it from the authentication group.
   You can also click ⬆ or ⬇ to set the card swiping order.
4) Input the **Card Swiping Times** for the selected card group.
   Notes:
   - The Card Swiping Times should be larger than 0 and smaller than the added card quantity in the card group.
   - The upper limit of Card Swiping Times is 16.
5) Click **OK** to save the settings.

7. Click **Save** to save and take effect of the new settings.

Notes:

- For each access control point (door), up to 20 authentication groups can be added.

- For the authentication group which certificate type is **Local Authentication**, up to 8 card groups can be added to the authentication group.
- For the authentication group which certificate type is **Local Authentication and Super Password** or **Local Authentication and Remotely Open Door**, up to 7 card groups can be added to the authentication group.

7.6.4 Open Door with First Card

Purpose:

You can set multiple first cards for one access control point. After the first card swiping, it allows multiple persons access the door or other authentication actions. The first card mode contains Remain Open with First Card, Disable Remain Open with First Card, and First Card Authorization.

- **Remain Open with First Card:** The door remains open for the configured time duration after the first card swiping until the remain open duration ends.
- **Disable Remain Open with First Card:** Disable the function.
- **First Card Authorization:** All authentications (except for the authentications of super card, super password, duress card, and duress code) are allowed only after the first card authorization.

  Notes:

  - The first card authorization is effective only on the current day. The authorization will be expired after 24:00 on the current day.
  - You can swipe the first card again to disable the first card mode.

Steps:

1. Click **Open Door with First Card** tab to enter the following interface.

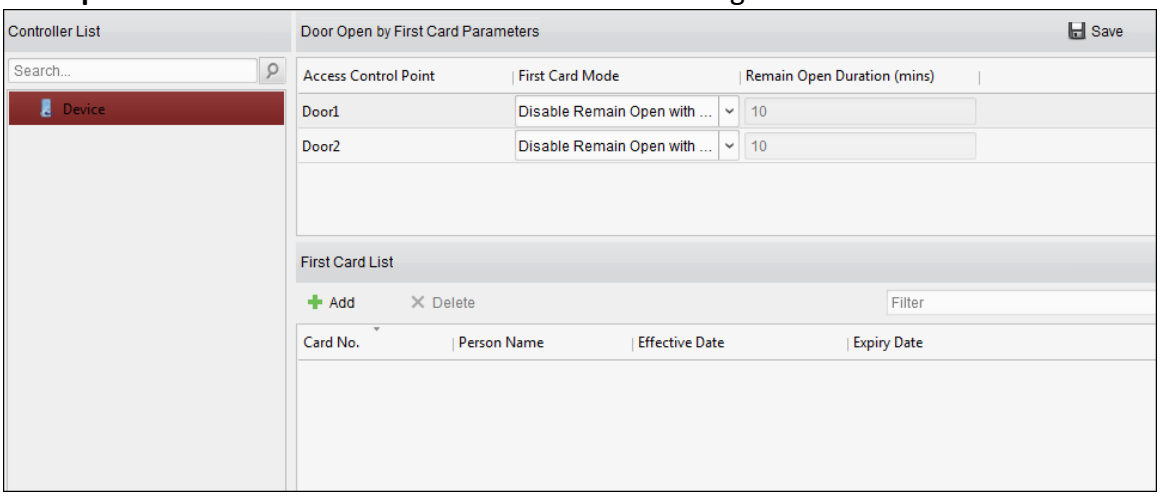

2. Select an access control device from the list on the left.
3. Select the first card mode in the drop-down list for the access control point.
4. (Optional) If you select Remain Open with First Card, you should set remain open duration.

   Notes:

   - The Remain Open Duration should be between 0 and 1440 minutes. By default, it is 10 minutes.

- You can swipe the first card again to disable the first card mode.

5. In the First Card list, Click **Add** button to pop up the following dialog box.

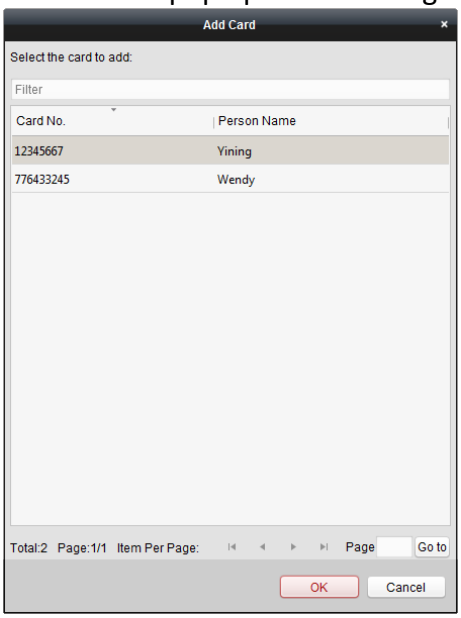

   1) Select the cards to add as first card for the door
      Note: Please set the card permission and apply the permission setting to the access control device first. For details, refer to *Chapter 7.5 Permission Configuration.*
   2) Click **OK** button to save adding the card.

6. You can click **Delete** button to remove the card from the first card list.
7. Click **Save** to save and take effect of the new settings.

7.6.5 Anti-Passing Back

Purpose:

You can set to only pass the access control point according to the specified path and only one person could pass the access control point after swiping the card.

Notes:

- Either the anti-passing back or multi-door interlocking function can be configured for an access control device at the same time.
- You should enable the anti-passing back function on the access control device first.

Steps:

1. Click **Anti-passing Back** tab to enter the following interface.

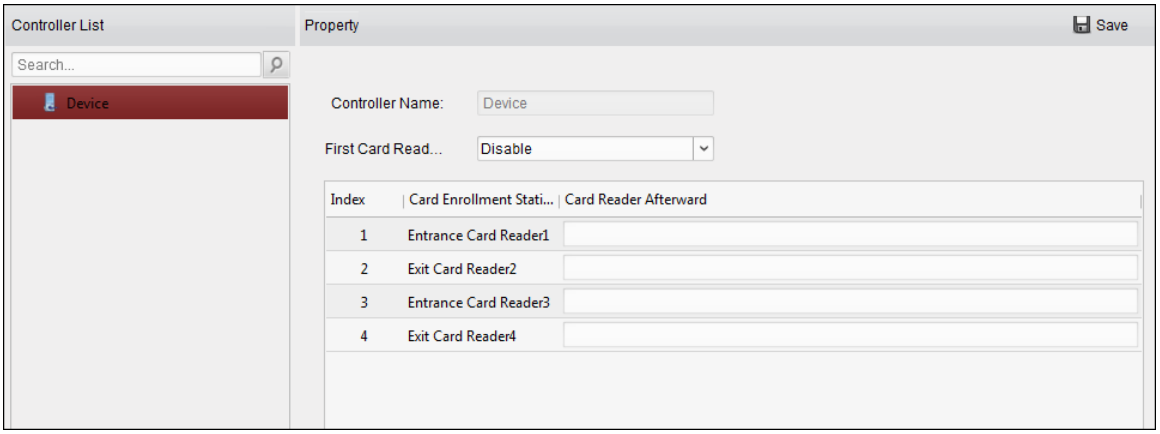

2. Select an access control device from the device list on the left.
3. In the First Card Reader field, select the card reader as the beginning of the path.
4. In the list, click the text filed of **Card Reader Afterward** and select the linked card readers.
   Example: If you select Reader In_01 as the beginning, and select Reader In_02, Reader Out_04 as the linked card readers. Then you can only get through the access control point by swiping the card in the order as Reader In_01, Reader In_02 and Reader Out_04.

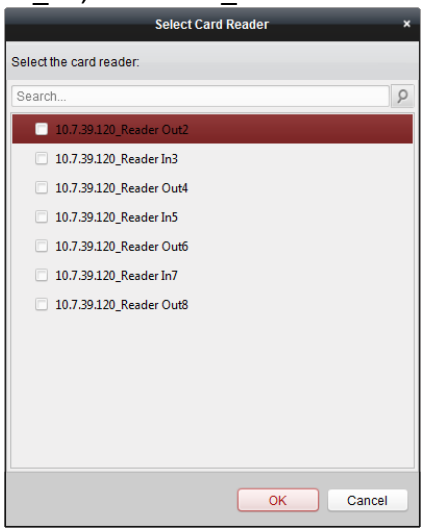

   Note: Up to four afterward card readers can be added for one card reader.
5. (Optional) You can enter the Select Card Reader dialog box again to edit its afterward card readers.
6. Click **Save** to save and take effect of the new settings.

7.6.6 Cross-Controller Anti-passing Back

Purpose:
You can set anti-passing back for card readers in multiple access control devices. You should swipe the card according to the configured swiping card route. And only one person could pass the access control point after swiping the card.
Note: The function should be supported by the device.
Click **Cross-Controller Anti-passing Back** to enter the Cross-Controller Anti-passing Back tab.

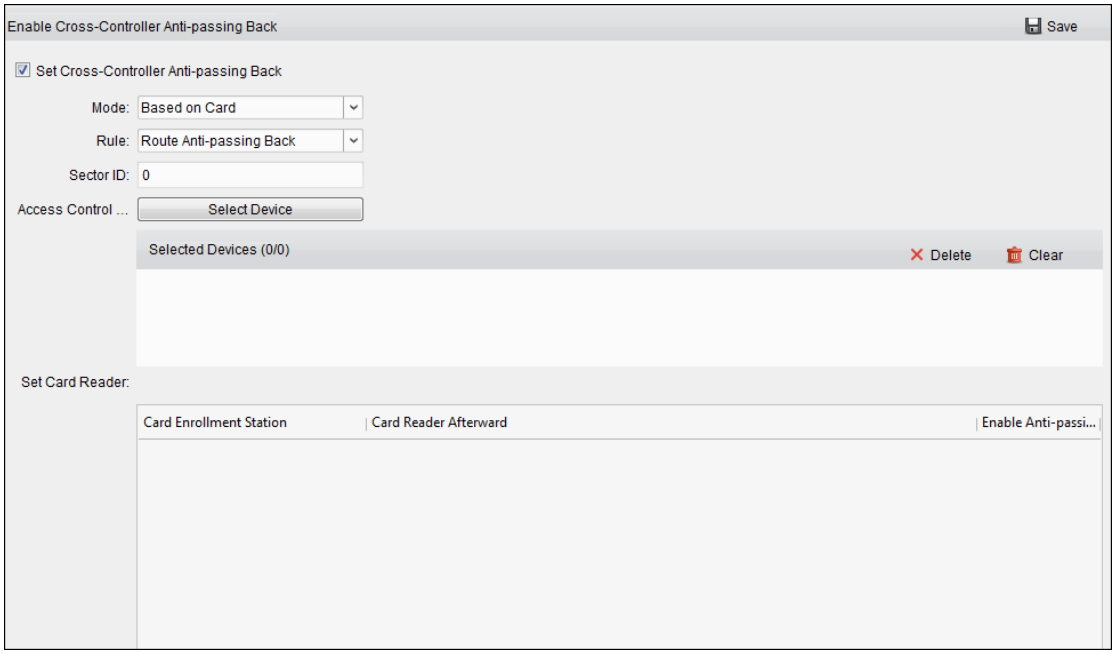

Setting Route Anti-passing Back

Purpose:

The route anti-passing back depends on the card swiping route. You should set the first card reader and the card readers afterwards.

Steps:

1. Check the **Enable Cross-Controller Anti-passing Back** checkbox to enable the function.
2. Set the anti-passing back parameters.
   - **Based on Card**

     Note: The system will judge the anti-passing back according to the entrance and exit records on the card.

     1) Select **Based on Card** as the anti-passing back mode in the drop-down list.
     2) Select **Route Anti-passing Back** as the rule.
     3) Set the sector ID.
     4) Click **Select Access Controller** to select a device in the pop-up window.
     5) In the **Card Reader** area, click the icon on the left of the card reader column to select the first card reader. The icon will turn to .
     6) Click the card reader afterward input field to select the card readers afterward in the pop-up window.
     7) Check the checkbox in the Enable Anti-passing Back column to enable the anti-passing back function.

        Notes:

        - The displayed card readers in the card reader afterward input field should be in authentication order.
        - Up to 64 devices with anti-passing back function can be added.
        - Up to 16 card readers afterward can be added for each card reader.
        - It supports M1 card at present and the sector cannot be encrypted.

- **Based on Network**

  Note: Authenticate the anti-passing back according to the entrance and exit information on the card reader.

  1) Select **Based on Network** as the anti-passing back mode in the drop-down list.
  2) Select **Route Anti-passing Back** as the rule.
  3) Select a server in the drop-down list for judging the anti-passing back.
  4) (Optional) You can click **Delete Record** and select the card in the pop-up window to delete the card swiping information in all devices.
     The user should be start swiping card again from the first card reader.
  5) Click **Select Access Controller** to select a device in the pop-up window.
  6) In the Card Reader area, click the icon on the left of the card reader column to select the first card reader. The icon will turn to .
  7) Click the card reader afterward input field to select the card readers afterward in the pop-up window.
  8) Check the checkbox in the Enable Anti-passing Back column to enable the anti-passing back function.

     Notes:

     - The displayed card readers in the card reader afterward input field should be in authentication order.
     - Up to 64 devices with anti-passing back function can be added.
     - Up to 16 card readers afterward can be added for each card reader.
     - Up to 5000 cards' swiping records can be stored in the selected server.

Setting Entrance/Exit Anti-passing Back

Purpose:

You can set the entrance card reader and the exit card reader only for entering and exiting, without setting the first card reader and the card readers afterwards.

Steps:

1. In the Cross-Controller Anti-passing Back tab, check the **Enable Cross-Controller Anti-passing Back** checkbox to enable the function.
2. Set the anti-passing back parameters.

   - **Based on Card**

     Note: The system will judge the anti-passing back according to the entrance and exit records on the card.

     1) Select **Based on Card** as the anti-passing back mode in the drop-down list.
     2) Select **Entrance/Exit Anti-passing Back** as the rule.
     3) Set the sector ID.
     4) Click **Select Access Controller** to select a device in the pop-up window.
     5) In the Card Reader area, check the checkboxes in the Enable Anti-passing Back column to select the entrance card reader and the exit card reader.
     6) Click **Save** to save the settings.

        Notes:

- Up to one entrance carder and one exit card reader should be checked.
- Up to 64 devices with anti-passing back function can be added.
- It supports M1 card at present and the sector cannot be encrypted..

➢ **Based on Network**

Note: Authenticate the anti-passing back according to the entrance and exit information on the card reader.

1) Select **Based on Network** as the anti-passing back mode in the drop-down list.
2) Select **Entrance/Exit Anti-passing Back** as the rule.
3) Select the server in the dropdown list for judging the anti-passing back.
4) (Optional) You can click **Delete Record** and select the card in the pop-up window to delete the card swiping information in all devices.
5) Click **Select Access Controller** to select a device in the pop-up window.
6) In the Card Reader area, check the checkboxes in the Enable Anti-passing Back column to select the entrance card reader and the exit card reader.
7) Click **Save** to save the settings.

   Notes:

   - Up to one entrance carder and one exit card reader should be checked.
   - Up to 64 devices with anti-passing back function can be added.
   - Up to 5000 cards' swiping records can be stored in the selected server.

7.7 Searching Access Control Event

Purpose:

You can search the access control history events including remote event and local event via the client.

Local Event: Search the access control event from the database of the control client.

Remote Event: Search the access control event from the device.

Click icon and click Access Control Event tab to enter the following interface.

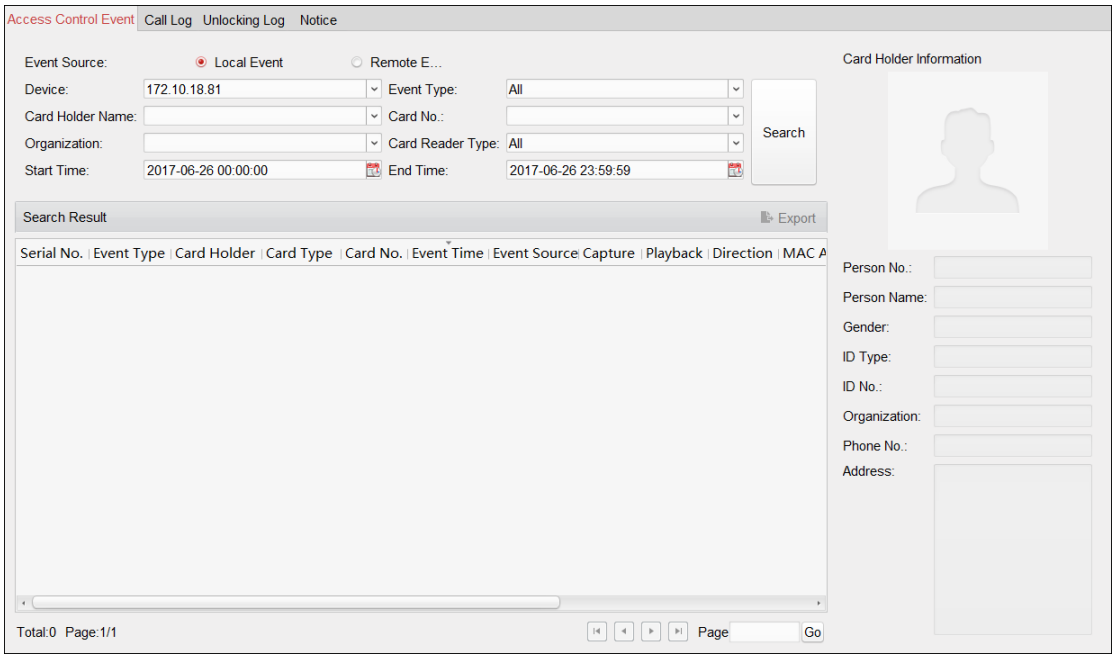

7.7.1 Searching Local Access Control Event

Steps:

1. Select the Event Source as **Local Event**.
2. Input the search condition according to actual needs.
3. Click **Search**. The results will be listed below.
4. For the access control event which is triggered by the card holder, you can click the event to view the card holder details, including person No., person name, organization, phone number, contact address and photo.
5. (Optional) If the event contains linked pictures, you can click in the **Capture** column to view the captured picture of the triggered camera when the alarm is trigged.
6. (Optional) If the event contains linked video, you can click in the **Playback** column to view the recorded video file of the triggered camera when the alarm is trigged.

   Note: For setting the triggered camera, refer to *Chapter 7.8.1 Access Control Event Linkage.*
7. You can click **Export** to export the search result to the local PC in *.csv file.

7.7.2 Searching Remote Access Control Event

Steps:

1. Select the Event Source as **Remote Event**.
2. Input the search condition according to actual needs.

3. (Optional) You can check **With Alarm Picture** checkbox to search the events with alarm pictures.
4. Click **Search**. The results will be listed below.
5. You can click **Export** to export the search result to the local PC in *.csv file.

7.8 Access Control Event Configuration

Purpose:

For the added access control device, you can configure its access control linkage including access control event linkage, access control alarm input linkage, event card linkage, and cross-device linkage.

Click the icon on the control panel,
or click **Tool**->**Event Management** to open the Event Management page.

7.8.1 Access Control Event Linkage

Purpose:

You can assign linkage actions to the access control event by setting up a rule. For example, when the access control event is detected, an audible warning appears or other linkage actions happen.

Note: The linkage here refers to the linkage of the client software's own actions.

Steps:

1. Click the **Access Control Event** tab.
2. The added access control devices will display in the Access Control Device panel on the left. Select the access control device, or alarm input, or access control point (door), or card reader to configure the event linkage.
3. Select the event type to set the linkage.
4. Select the triggered camera. The image or video from the triggered camera will pop up when the selected event occurs.
   To capture the picture of the triggered camera when the selected event occurs, you can also set the capture schedule and the storage in Storage Schedule.
5. Check the checkboxes to activate the linkage actions. For details, refer to *Table 14.1 Linkage Actions for Access Control Event*.
6. Click **Save** to save the settings.
7. You can click Copy to button to copy the access control event to other access control device, alarm input, access control point, or card reader.
   Select the parameters for copy, select the target to copy to, and click **OK** to confirm.

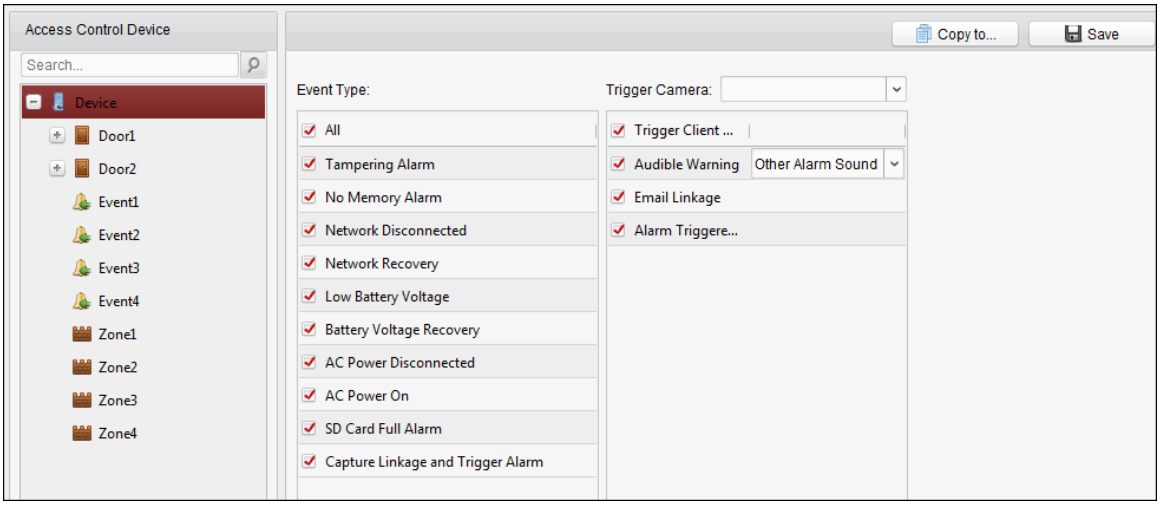

Table 1. 1 Linkage Actions for Access Control Event

Linkage Actions	Descriptions
Audible Warning	The client software gives an audible warning when alarm is triggered. You can select the alarm sound for audible warning.
Email Linkage	Send an email notification of the alarm information to one or more receivers.
Alarm Triggered Pop-up Image	The image with alarm information pops up when alarm is triggered.

7.8.2 Access Control Alarm Input Linkage

Purpose:

The access control alarm inputs can be linked to some actions (e.g., alarm output, host buzzer) when it is triggered.

Note: The function should be supported by the device.

Steps:

1. Click **Access Control Alarm Input** tab to enter the following interface.

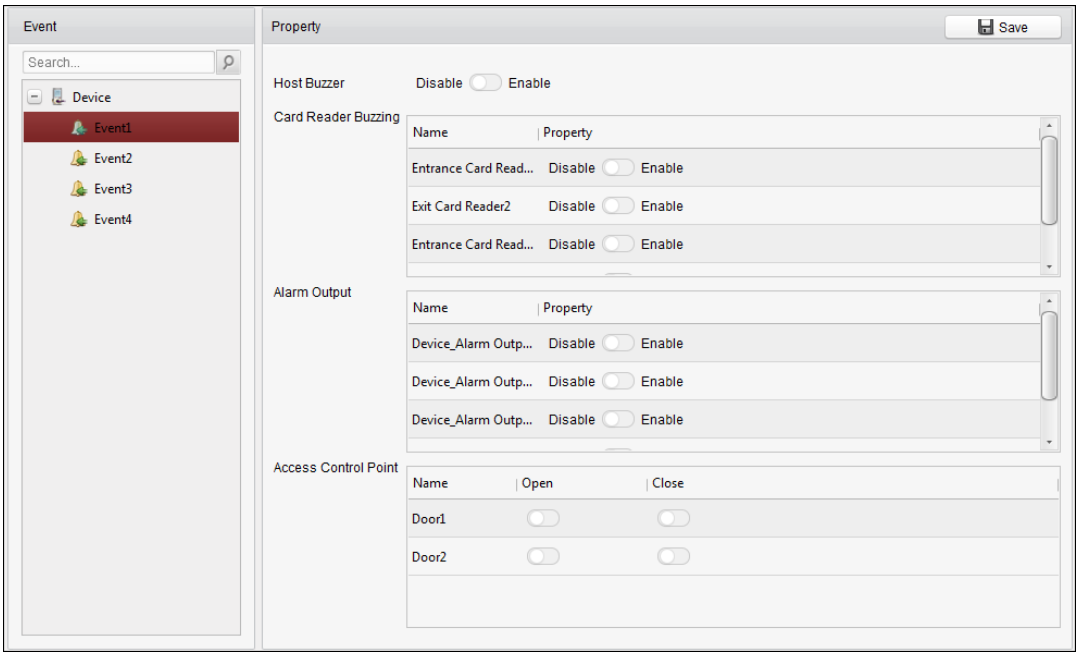

2. In the event list on the left, select an alarm input.
3. Switch the property from to to enable this action.
   Host Buzzer: The audible warning of controller will be triggered.
   Card Reader Buzzer: The audible warning of card reader will be triggered.
   Alarm Output: The alarm output will be triggered for notification.
   Access Control Point (Open/Close): The door will be open or closed when the case is triggered.
   Note: The door cannot be configured as open or closed at the same time.
4. Click **Save** button to save the settings.

7.8.3 Event Card Linkage

Click **Event Card Linkage** tab to enter the following interface.
Note: The Event Card Linkage should be supported by the device.

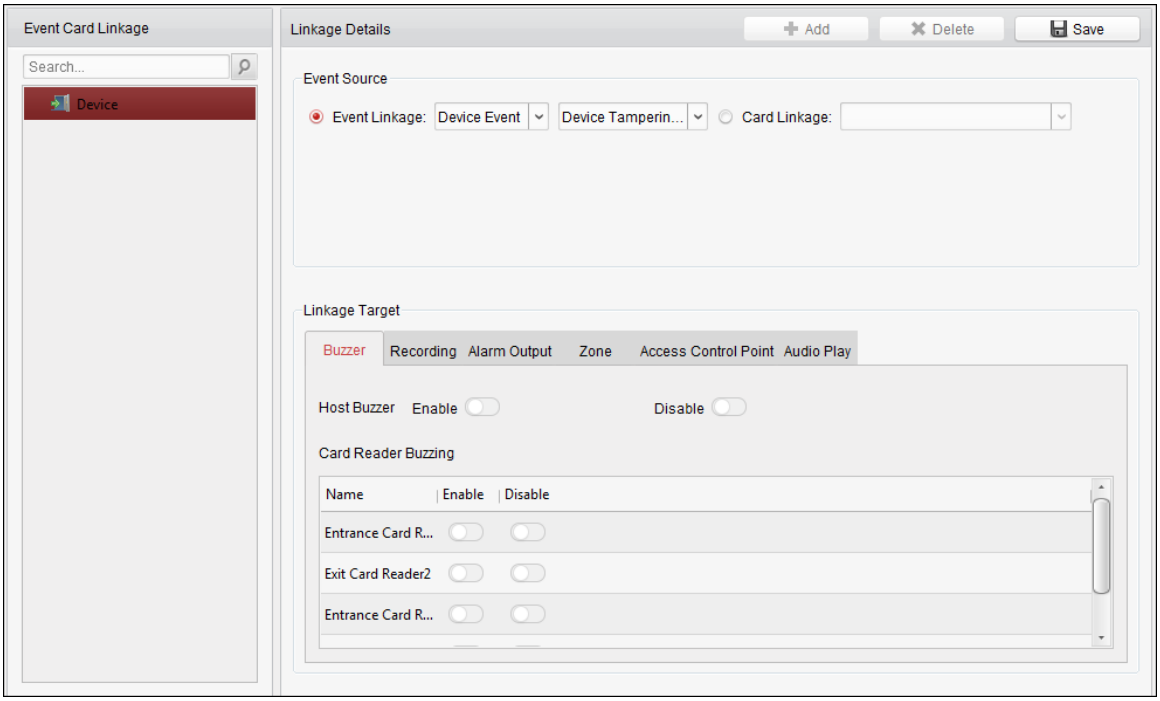

Select the access control device from the list on the left.

Click **Add** button to add a new linkage. You can select the event source as **Event Linkage** or **Card Linkage**.

Event Linkage

For the event linkage, the alarm event can be divided into four types: device event, alarm input, door event, and card reader event.

Steps:

1. Select a device on the left and click **Add.**
2. Click to select the linkage type as **Event Linkage**, and select the event type from the dropdown list.
   - For Device Event, select the detailed event type from the dropdown list.
   - For Alarm Input, select the type as alarm or alarm recovery and select the alarm input name from the panel.
   - For Door Event, select the detailed event type and select the source door from the panel.
   - For Card Reader Event, select the detailed event type and select the card reader from the panel.
3. Click different tabs to set different parameters. Switch the property from to to enable this function.

   You can set the parameters of buzzer, recording, alarm output, zone, access control point, and audio play.

Linkage Type	Linkage Target	Descriptions
Buzzer	Host Buzzer	The audible warning of controller will be triggered.
	Card Reader Buzzing	The audible warning of card reader will be triggered.

Recording	Capture Status	The real-time capture will be triggered.
Alarm Output	Alarm Output	The alarm output will be triggered for notification.
Zone	Zone	The zone will be armed or disarmed according to your settings.
Access Control Point	Access Control Point	The door status of open, close, remain open, and remain closed will be triggered. ***Notes:*** ● The door status of open, close, remain open, and remain close cannot be triggered at the same time. ● The target door and the source door cannot be the same one.
Audio Play	Audio Play Status	The audio prompt will be triggered. And the select audio index related audio content will be played according to the configured play mode. ***Note:*** For details about the audio index content, see *Appendix C Table of Audio Index Related Content*.

4. Click **Save** to save and take effect of the parameters.

Card Linkage

Steps:

1. Click to select the linkage type as **Card Linkage**.
2. Input the card No. or select the card from the dropdown list.
3. Select the card reader from the panel for triggering.
5. Click different tabs to set different parameters. Switch the property from to to enable this function.

   You can set the parameters of buzzer, recording, alarm output, zone, access control point, and audio play.

Linkage Type	Linkage Target	Descriptions
Buzzer	Host Buzzer	The audible warning of controller will be triggered.
	Card Reader Buzzing	The audible warning of card reader will be triggered.
Recording	Capture Status	The real-time capture will be triggered.
Alarm Output	Alarm Output	The alarm output will be triggered for notification.
Zone	Zone	The zone will be armed or disarmed according to your settings.
Access Control Point	Access Control Point	The door status of open, close, remain open, and remain closed will be triggered. ***Notes:*** ● The door status of open, close, remain open, and remain close cannot be triggered at the same

		time. ● The target door and the source door cannot be the same one.
Audio Play	Audio Play Status	The audio prompt will be triggered. And the select audio index related audio content will be played according to the configured play mode. ***Note:*** For details about the audio index content, see *Appendix C Table of Audio Index Related Content*.

4. Click **Save** to save and take effect of the parameters.

7.8.4 Cross-Device Linkage

Purpose:

You can assign to trigger other access control device's action by setting up a rule when the access control event is triggered.

Click **Cross-Device Linkage** tab to enter the following interface.

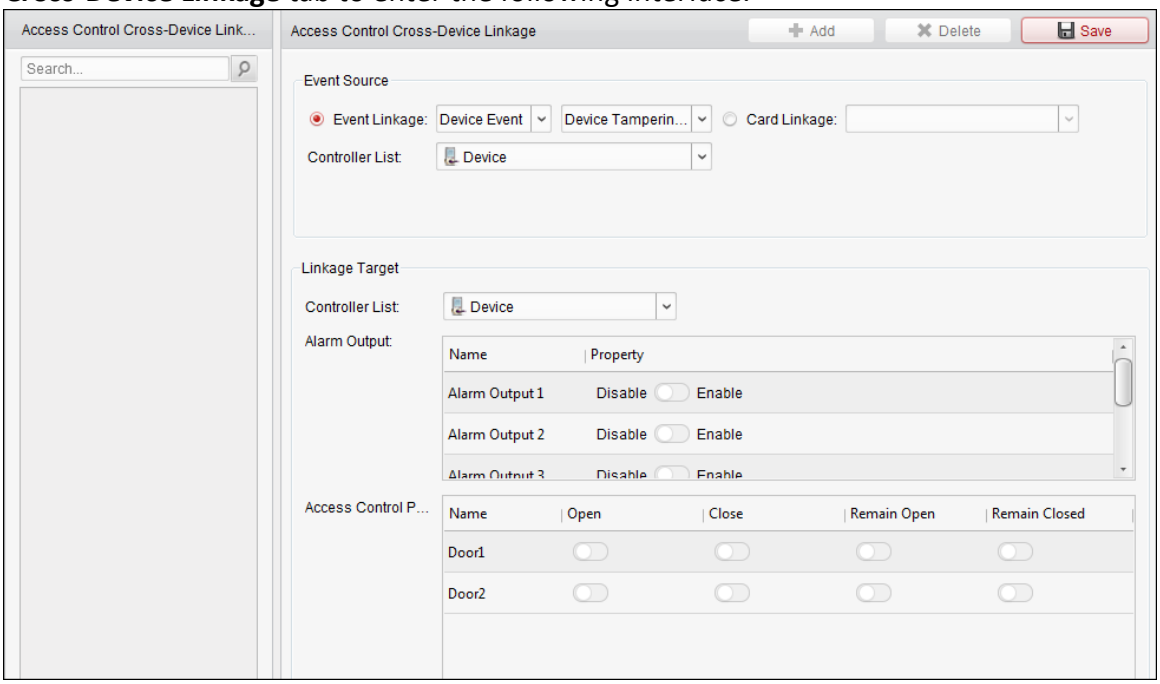

Click **Add** button to add a new client linkage. You can select the event source as **Event Linkage** or **Card Linkage**.

Event Linkage

For the event linkage, the alarm event can be divided into four types: device event, alarm input, door event, and card reader event.

Steps:

1. Click to select the linkage type as **Event Linkage**, select the access control device as event source, and select the event type from the dropdown list.
   - For Device Event, select the detailed event type from the dropdown list.

- For Alarm Input, select the type as alarm or alarm recovery and select the alarm input name from the table.
- For Door Event, select the detailed event type and select the door from the table.
- For Card Reader Event, select the detailed event type and select the card reader from the table.

2. Set the linkage target, select the access control device from the dropdown list as the linkage target, and switch the property from to to enable this function.
   - **Alarm Output**: The alarm output will be triggered for notification.
   - **Access Control Point**: The door status of open, close, remain open, and remain close will be triggered.
     Note: The door status of open, close, remain open, and remain close cannot be triggered at the same time.
3. Click **Save** button to save parameters.

Card Linkage

Steps:

1. Click to select the linkage type as **Card Linkage**.
2. Select the card from the dropdown list and select the access control device as event source.
3. Select the card reader from the table for triggering.
4. Set the linkage target, select the access control device from the dropdown list as the linkage target, and switch the property from to to enable this function.
   Alarm Output: The alarm output will be triggered for notification.
5. Click **Save** button to save parameters.

7.9 Door Status Management

Purpose:

The door status of the added access control device will be displayed in real time. You can check the door status and the linked event(s) of the selected door. You can control the status of the door and set the status duration of the doors as well.

7.9.1 Access Control Group Management

Purpose:

Before controlling the door status and setting the status duration, you are required to organize it into group for convenient management.

Perform the following steps to create the group for the access control device:

Steps:

1. Click on the control panel to open the Device Management page.
2. Click **Group** tab to enter the Group Management interface.

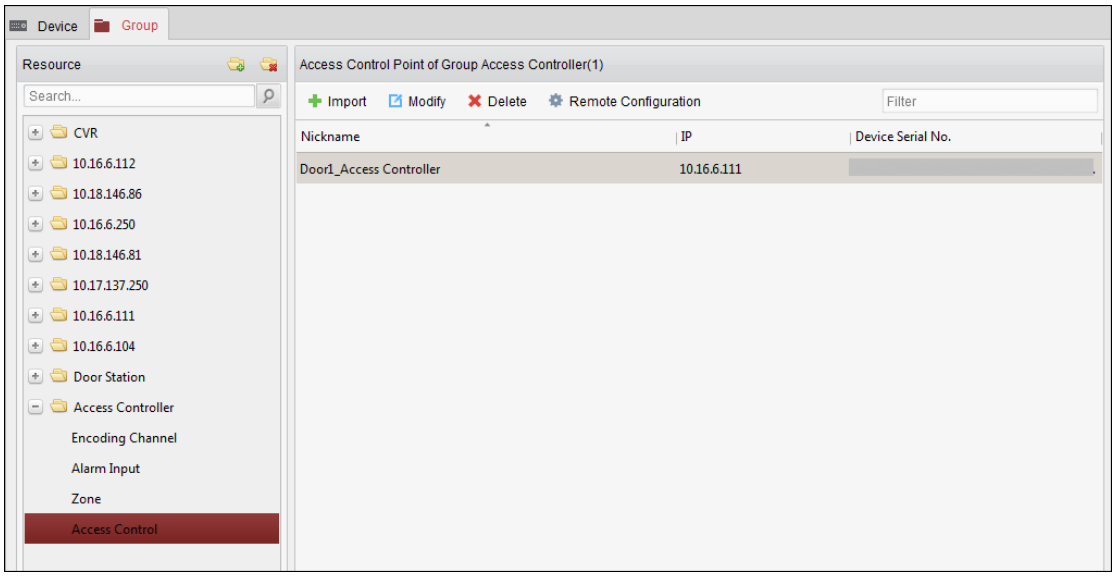

3. Perform the following steps to add the group.
   1) Click to open the Add Group dialog box.
   2) Input a group name as you want.
   3) Click **OK** to add the new group to the group list.
      You can also check the checkbox **Create Group by Device Name** to create the new group by the name of the selected device.

4. Perform the following steps to import the access control points to the group:
   1) Click **Import** on Group Management interface, and then click the **Access Control** tab to open the Import Access Control page.
      Notes:
      - You can also select **Alarm Input** tab and import the alarm inputs to group.
      - For the Video Access Control Terminal, you can add the cameras as encoding channel to the group.
   2) Select the names of the access control points in the list.
   3) Select a group from the group list.
   4) Click **Import** to import the selected access control points to the group.
      You can also click **Import All** to import all the access control points to a selected group.

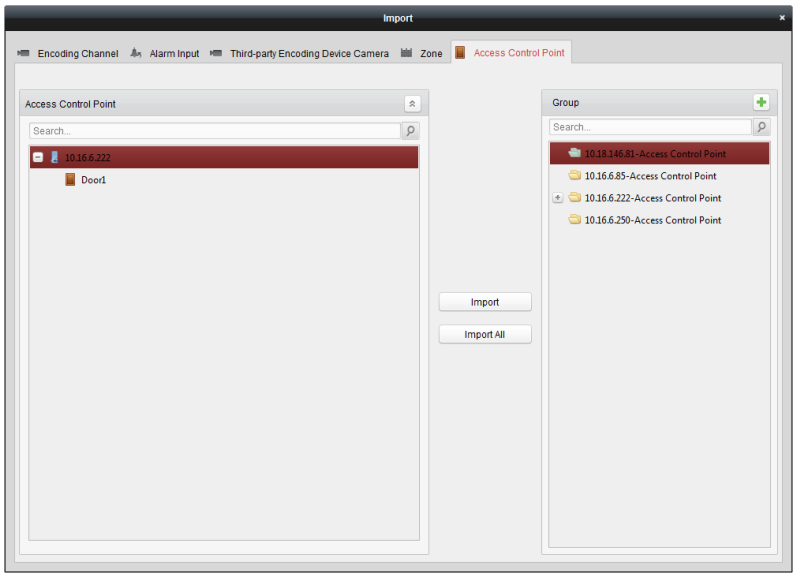

5. After importing the access control points to the group, you can click , or double-click the group/access control point name to modify it.

7.9.2 Anti-control the Access Control Point (Door)

Purpose:

You can control the status for a single access control point (a door), including opening door, closing door, remaining open, and remaining closed.

Click icon on the control panel to enter the Status Monitor interface.

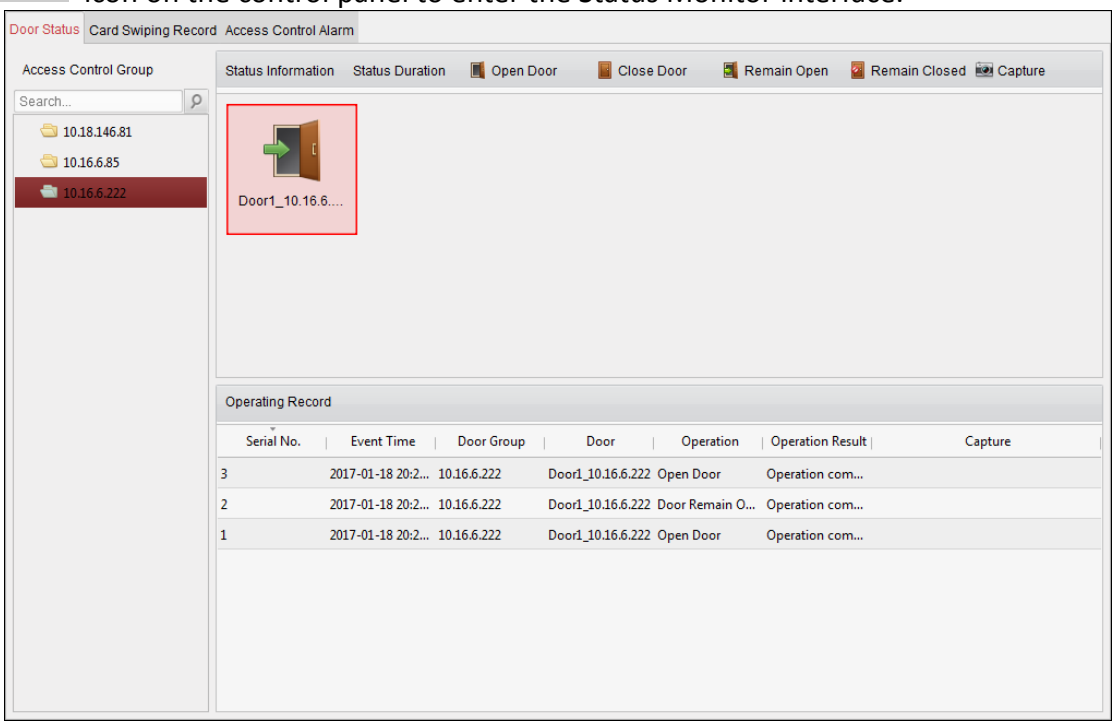

Steps:

1. Select an access control group on the left. For managing the access control group, refer to *Chapter 7.9.1 Access Control Group Management.*
2. The access control points of the selected access control group will be displayed on the right.

   Click icon on the Status Information panel to select a door.
3. Click the following button listed on the **Status Information** panel to control the door.

   Open Door: Click to open the door once.

   Close Door: Click to close the door once.

   Remain Open: Click to keep the door open.

   Remain Closed: Click to keep the door closed.

   Capture: Click to capture the picture manually.
4. You can view the anti-control operation result in the Operation Log panel.

Notes:

- If you select the status as **Remain Open/Remain Closed**, the door will keep open/closed until a new anti-control command being made.
- The **Capture** button is available when the device supports capture function. And it cannot be realized until the storage server is configured.
- If the door is in remain closed status, only super card can open the door or open door via the client software.

7.9.3 Status Duration Configuration

Purpose:

You can schedule weekly time periods for an access control point (door) to remain open or remain closed.

In the Door Status module, click **Status Duration** button to enter the Status Duration interface.

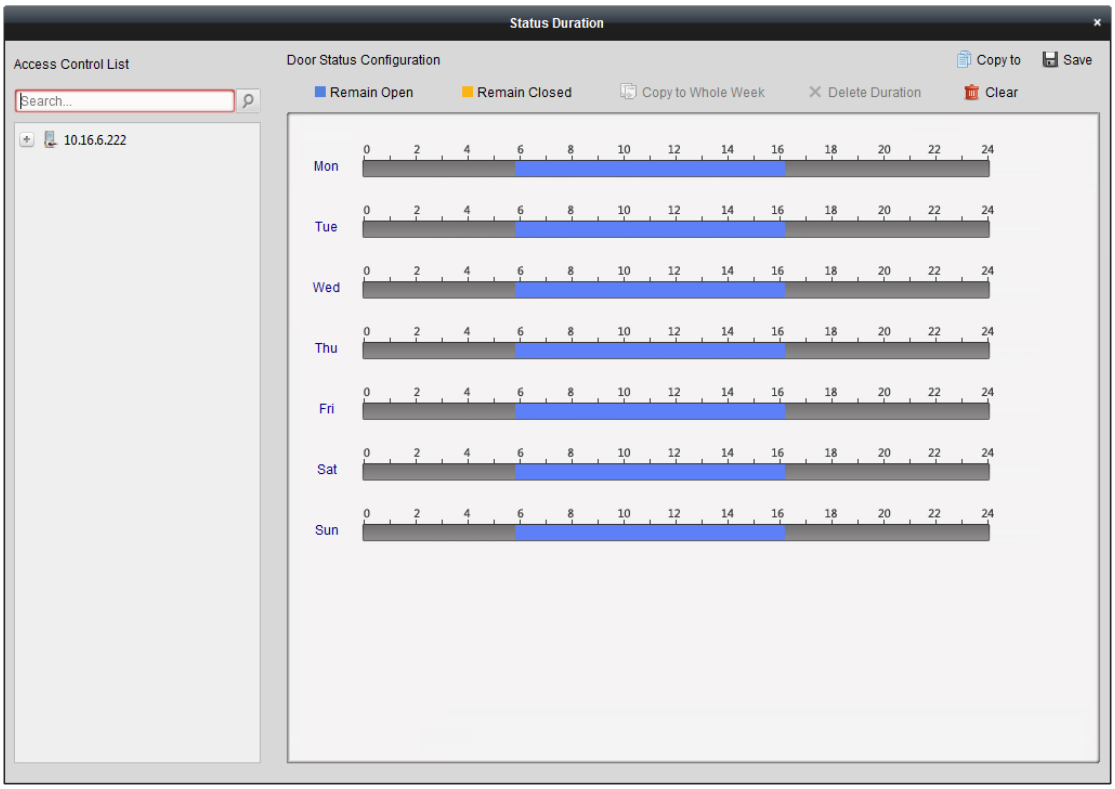

Steps:

1. Click to select a door from the access control device list on the left.
2. On the Door Status Configuration panel on the right, draw a schedule for the selected door.
   1) Select a door status brush as Remain Open or Remain Closed.
      Remain Open: The door will keep open during the configured time period. The brush is marked as .
      Remain Closed: The door will keep closed during the configured duration. The brush is marked as .
   2) Click and drag on the timeline to draw a color bar on the schedule to set the duration.

   3) When the cursor turns to , you can move the selected time bar you just edited. You can also edit the displayed time point to set the accurate time period.
      When the cursor turns to , you can lengthen or shorten the selected time bar.
3. Optionally, you can select the schedule time bar and click **Copy to Whole Week** to copy the

time bar settings to the other days in the week.

4. You can select the time bar and click **Delete Duration** to delete the time period. Or you can click **Clear** to clear all configured durations on the schedule.
5. Click **Save** to save the settings.
6. You can click **Copy to** button to copy the schedule to other doors.

7.9.4 Real-time Card Swiping Record

Click **Card Swiping Record** tab to enter the following interface.

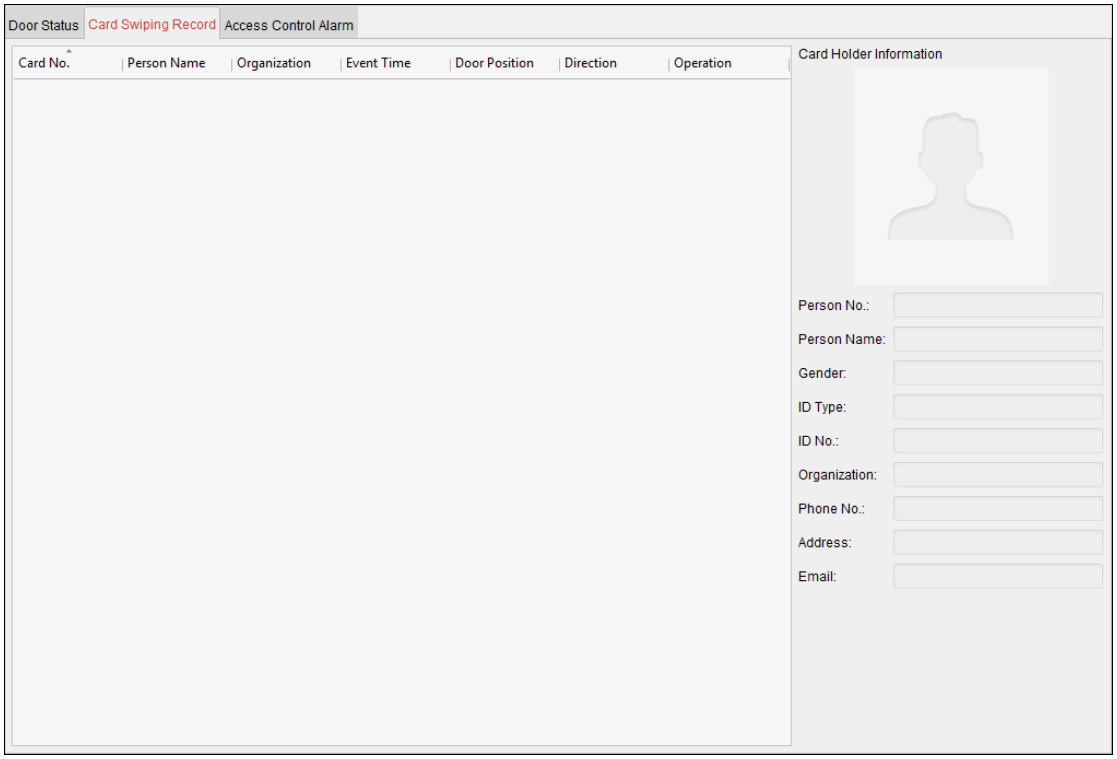

The logs of card swiping records of all access control devices will display in real time. You can view the details of the card swiping event, including card No., person name, organization, event time, etc.

You can also click the event to view the card holder details, including person No., person name, organization, phone, contact address, etc.

7.9.5 Real-time Access Control Alarm

Purpose:

The logs of access control events will be displayed in real time, including device exception, door event, card reader event, and alarm input.

Click **Access Control Alarm** tab to enter the following interface.

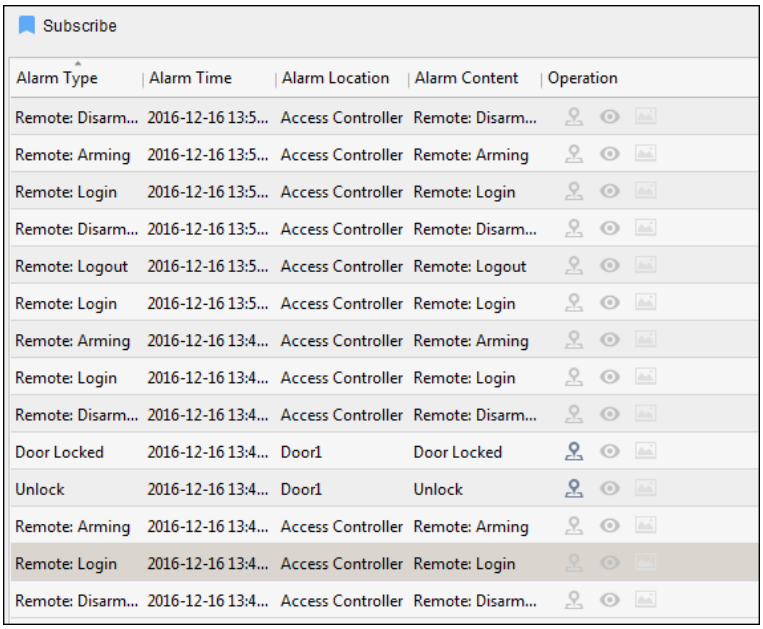

Steps:

1. All access control alarms will display in the list in real time.
   You can view the alarm type, alarm time, location, etc.
2. Click to view the alarm on E-map.
3. You can click or to view the live view or the captured picture of the triggered camera when the alarm is trigged.
   Note: For setting the triggered camera, refer to *Chapter 7.8.1 Access Control Event Linkage.*
4. Click **Subscribe** to select the alarm that the client can receive when the alarm is triggered.

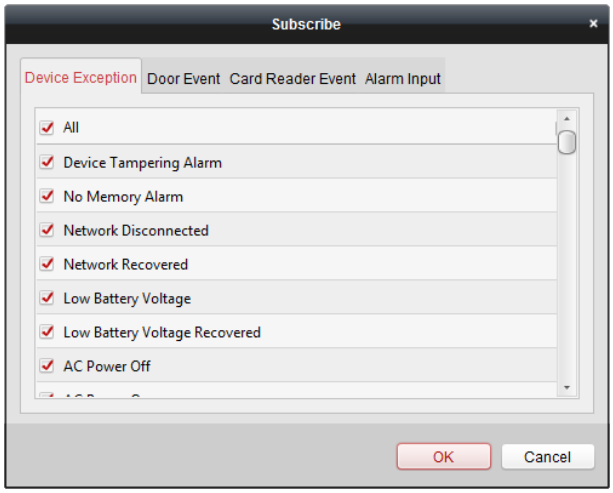

   1) Check the checkbox(es) to select the alarm(s), including device exception alarm, door event alarm, card reader alarm, and alarm input.
   2) Click **OK** to save the settings.

7.10 Arming Control

Purpose:

You can arm or disarm the device. After arming the device , the client can receive the alarm information from the device.

Steps:

1. Click **Tool->Device Arming Control** to pop up the Device Arming Control window.
2. Arm the device by checking the corresponding checkbox.
   Then the alarm information will be auto uploaded to the client software when alarm occurs.

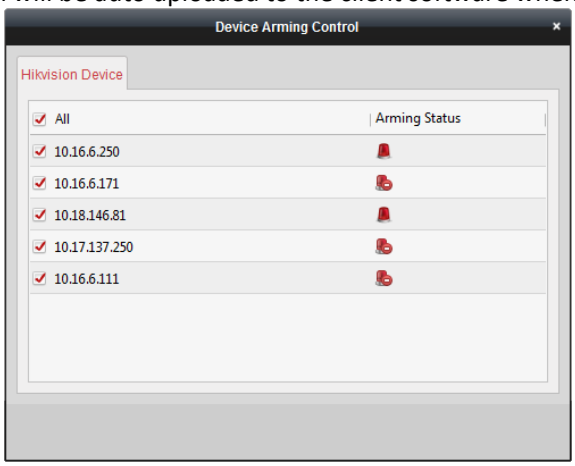

7.11 Time and Attendance

Purpose:

The Time and Attendance module provides multiple functionalities, including shift schedule management, attendance handling, attendance statistics and other advanced functions.

Before you start:

You should add organization and person in Access Control module. For details, refer to *Chapter 7.3.1 Adding Organization* and *Chapter 7.4.1 Adding Person.*

Perform the following steps to access the Time and Attendance module.

Click to enter the Time and Attendance module as follows:

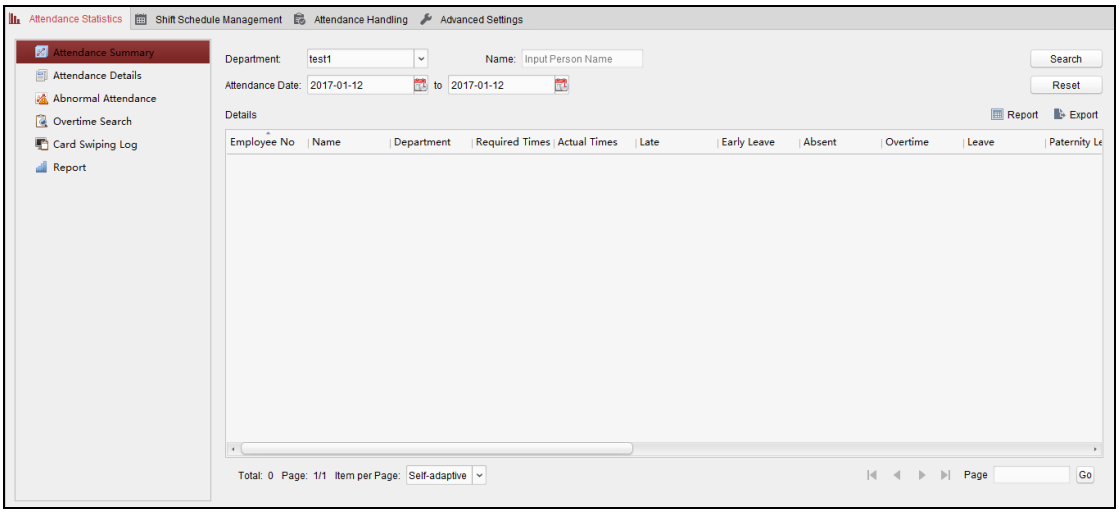

7.11.1 Shift Schedule Management

Open Time and Attendance module and click **Shift Schedule Management** to enter the Shift Schedule Management interface.

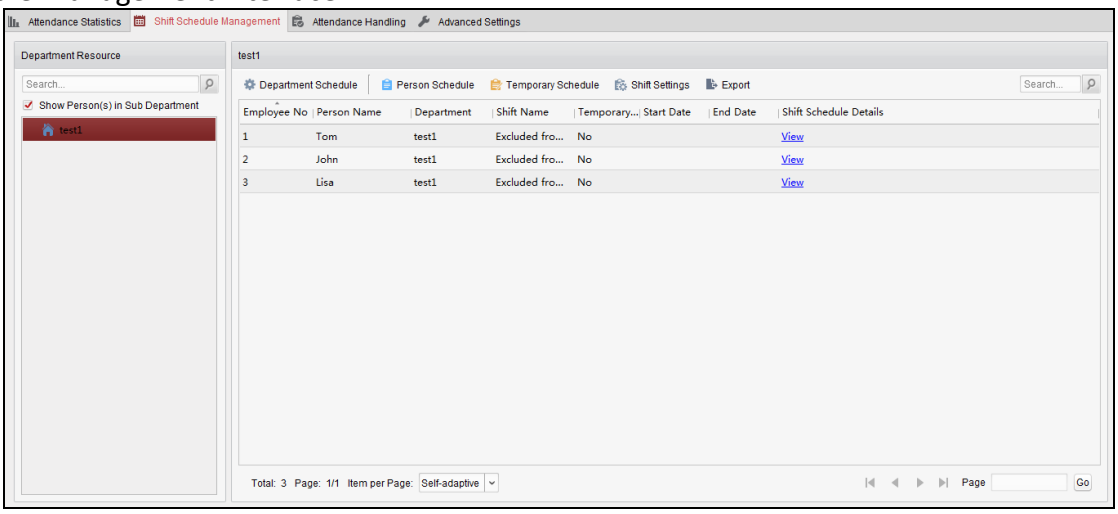

Shift Settings

Purpose:

You can add time period and shift for the shift schedule.

Click **Shift Settings** to pop up Shift Settings dialog.

➢ **Adding Time Period**

Steps:

1. Click **Time Period** tab.
2. Click **Add**.

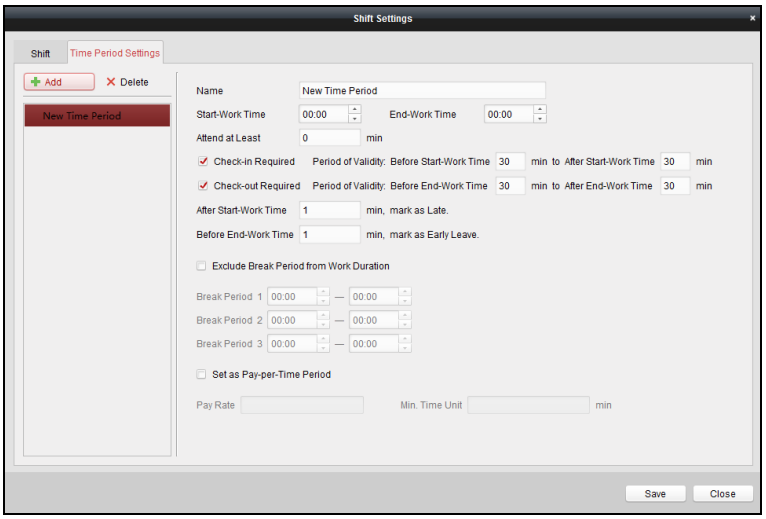

3. Set the related parameters.

   Name: Set the name for time period.

   Start-Work / End-Work Time: Set the start-work time and end-work time.

   Attend at Least: Set the minimum attendance time.

Check-in / Check-out Required: Check the checkboxes and set the valid period for check-in or check-out.

Mark as Late/Mark as Early Leave: Set the time period for late or early leave.

Exclude Break Period from Work Duration: Check the checkbox and set the break period excluded.

Note: Up to 3 break periods can be set.

Set as Pay-per-Time Period: Check the checkbox and set the pay rate and minimum time unit.

4. Click **Save** to save the settings.
   The added time period will display on the left panel of the dialog.
   You can also click **Delete** to delete the time period.

➢ **Adding Shift**

Steps:

1. Click **Shift** Tab.
2. Click **Add**.

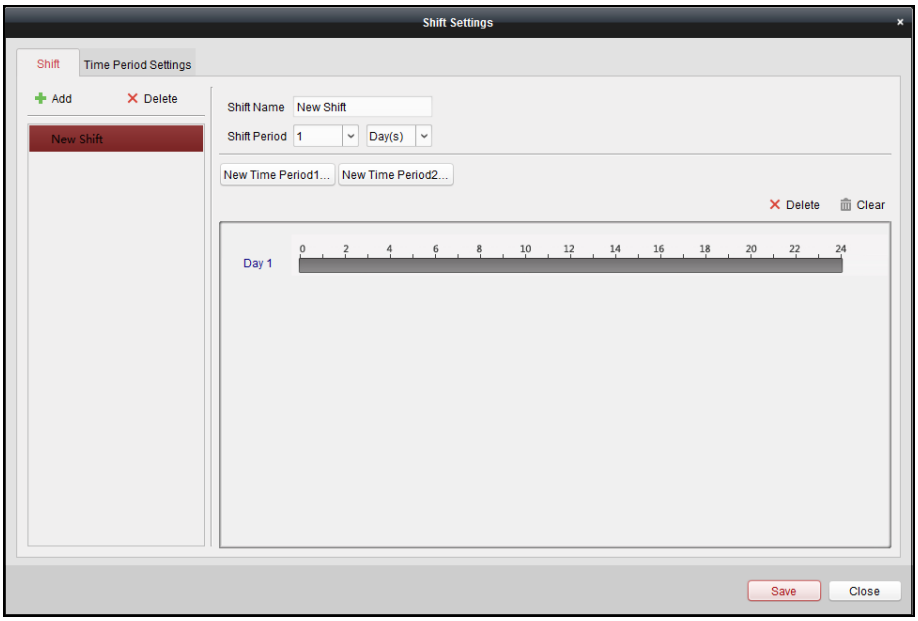

3. Set the name for shift.
4. Select the shift period from the drop-down list.
5. Configure the shift period with the added time period.
   1) Select the time period.
   2) Click the time bar to apply the time period for the select day.
   You can click the time period on the bar and click ✕ or **Delete** to delete the period.
   You can also click **Clear** to delete all days' time period.
6. Click **Save** to save the settings.
   The added shift will display on the left panel of the dialog.
   You can also click **Delete** on the left panel to delete the shift.

Shift Schedule Settings

Purpose:

After setting the shift, you can set department schedule, person schedule and temporary schedule.

Note: The temporary schedule has higher priority than department schedule and person schedule.

➢ **Department Schedule**

You can set the shift schedule for one department, and all the persons in the department will be assigned with the shift schedule.

Note: In Time and Attendance module, the department list is the same with the **organization** in Access Control. For setting the organization in Access Control, refer to *Chapter 7.3 Organization Management.*

Steps:

1. Open the Shift Schedule Management interface and select the department on the left panel.
2. Click **Department Schedule** to pop up Department Schedule dialog.

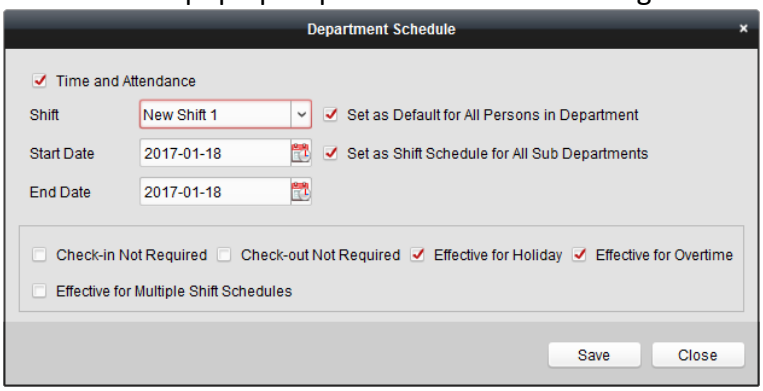

3. Check **Time and Attendance** checkbox.
   All persons in the department expect those excluded from attendance will apply the attendance schedule.
4. Select the shift from the drop-down list.
5. Set the start date and end date.
6. (Optional) Set other parameters for the schedule.
   You can select Check-in Not Required, Check-out Not Required, Effective for Holiday, Effective for Overtime, Effective for Multiple Shift Schedules.
   Notes:
   - Multiple Shift Schedules contains more than one time periods. The person can check in/out in any of the time periods and the attendance will be effective.
     Example: If the multiple shift schedules contains three time periods: 00:00 to 07:00, 08:00 to 15:00 and 16:00 to 23:00. The attendance of the person adopting this multiple shift schedules will be effective in any of the three time periods. If the person checks in at 07:50, it will apply the nearest time period 08:00 to 15:00 to the person's attendance.
   - After checking the **Effective for Multiple Shift Schedules** checkbox, you can select the effective time period(s) from the added time periods for the persons in the department.

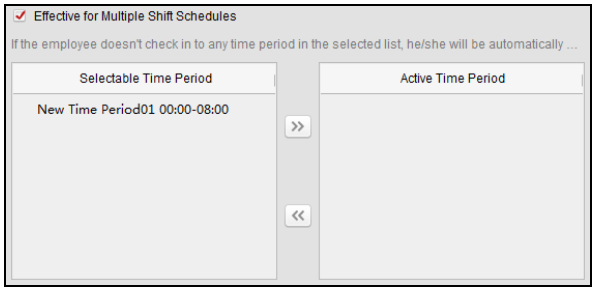

1) In the Selectable Time Period list on the left, click the added time period and click » to add it to the right.
2) (Optional) To remove the selected time period, select it and click «.

7. (Optional) Check **Set as Default for All Persons in Department** checkbox.
   All persons in the department will use this shift schedule by default.
8. (Optional) If the selected department contains sub department(s), the Set as **Shift Schedule for All Sub Departments** checkbox will display. You can check it to apply the department schedule to its sub departments.
9. Click **Save** to save the settings.

➢ **Person Schedule**

Steps:

1. Open the Shift Schedule Management interface and select the department on the left panel.
2. Select the person(s) on the right panel.
3. Click **Person Schedule** to pop up Person Schedule dialog.

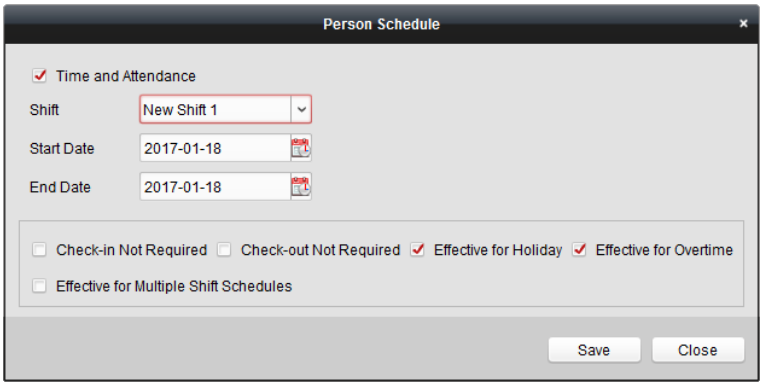

4. Check **Time and Attendance** checkbox.
   The configured person will apply the attendance schedule.
5. Select the shift from the drop-down list.
6. Set the start date and end date.
7. (Optional) Set other parameters for the schedule.
   You can select Check-in Not Required, Check-out Not Required, Effective for Holiday, Effective for Overtime, Effective for Multiple Shift Schedules.
8. Click **Save** to save the settings.

➢ **Temporary Schedule**

Steps:

1. Open the Shift Schedule Management interface and select the department on the left panel.
2. Select the person(s) on the right panel.
3. Click **Temporary Schedule** to pop up Temporary Schedule dialog.

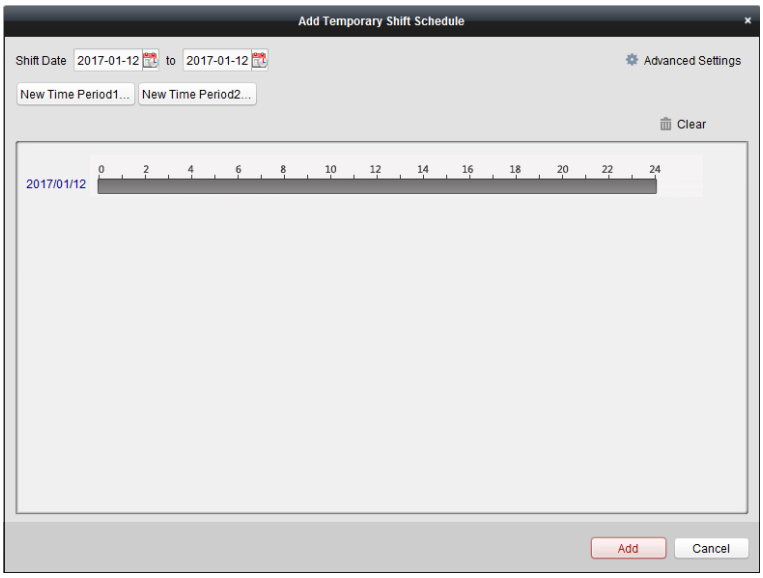

4. Click to set the shift date.
5. Configure the shift date with the added time period.
   1) Select the time period.
   2) Click the time bar to apply the time period for the select date.
   You can click the time period on the bar and click to delete the period.
   You can also click **Clear** to delete all days' time period.
6. You can click **Advanced Settings** to advanced attendance rules for the temporary schedule.

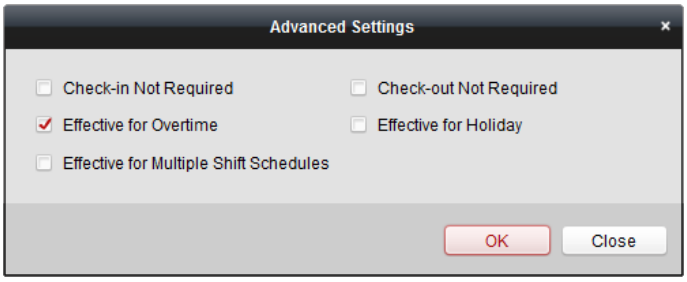

7. Click **Add** to save the settings.

➢ **Checking Shift Schedule Details**

Steps:

1. On the Shift Schedule Management interface, select the department on the left panel.
2. Select the person(s) on the right panel.
3. Click **View** to pop up Shift Schedule Details dialog.
   You can check the shift schedule details.

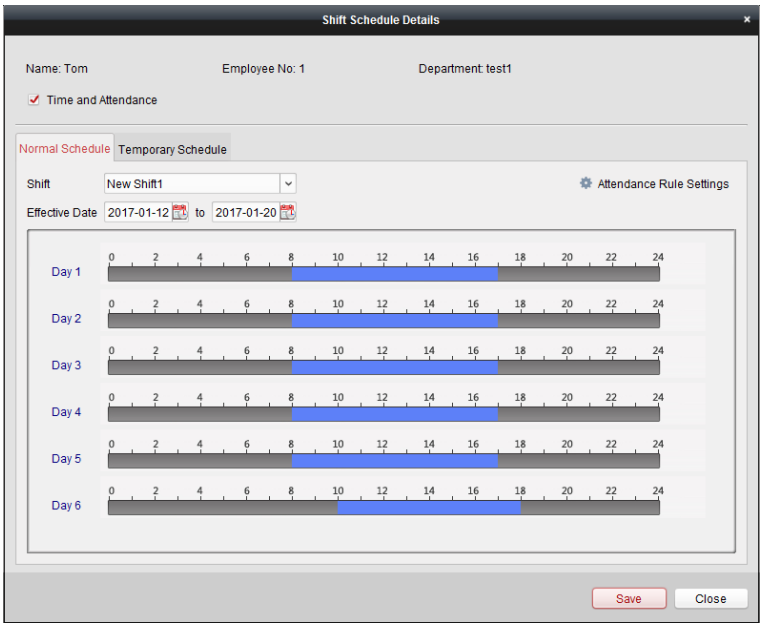

4. Click **Normal Schedule** tab.
   You can check and edit the normal schedule details.
   1) Select the shift from the drop-down list.
   2) Click **Attendance Rule Settings** to pop up Attendance Rule Settings dialog.

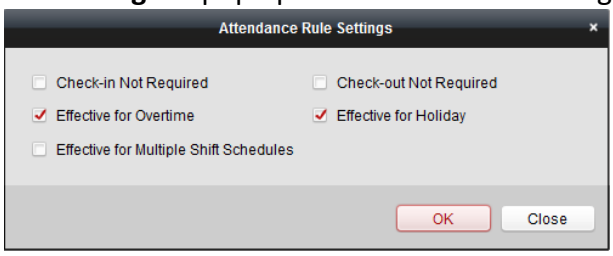

   You can check the attendance rules as desired and click **OK** to save the settings.
   3) Click to set the effective date.
   4) Click **Save** to save the settings.
5. (Optional) Click **Temporary Schedule** tab.

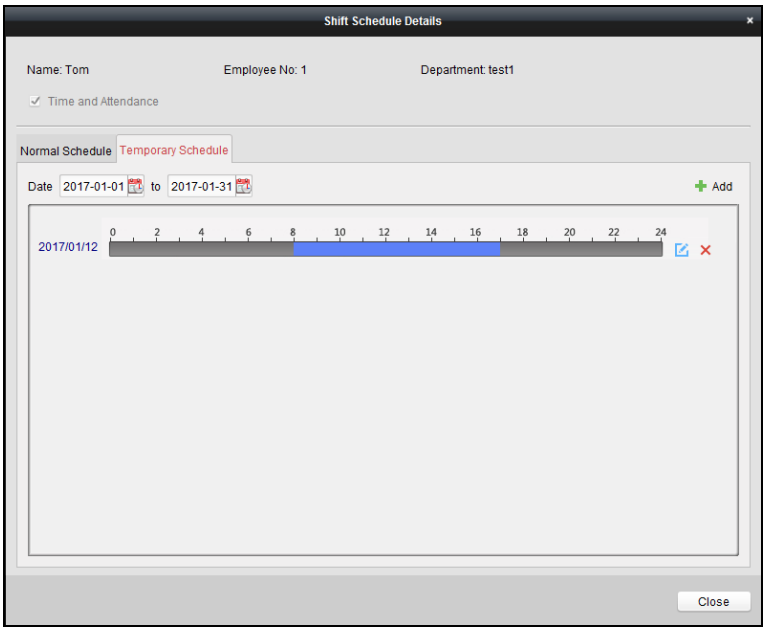

You can check and edit the temporary schedule details.

(Optional) Click **Add** to add temporary schedule for the selected person.

(Optional) Click to edit the time period.

(Optional) Click to delete the temporary schedule.

➢ **Exporting Shift Schedule Details**

On the Shift Schedule Management interface, select the department on the left panel and click **Export** to export all persons' shift schedule details to local PC.

Note: The exported details are saved in *.csv format.

7.11.2 Attendance Handling

Purpose:

You can handle the attendance, including check-in correction, check-out correction, leave and business trip, and manual calculation of attendance.

Open Time and Attendance module and click **Attendance Handling** to enter the Attendance Handling interface.

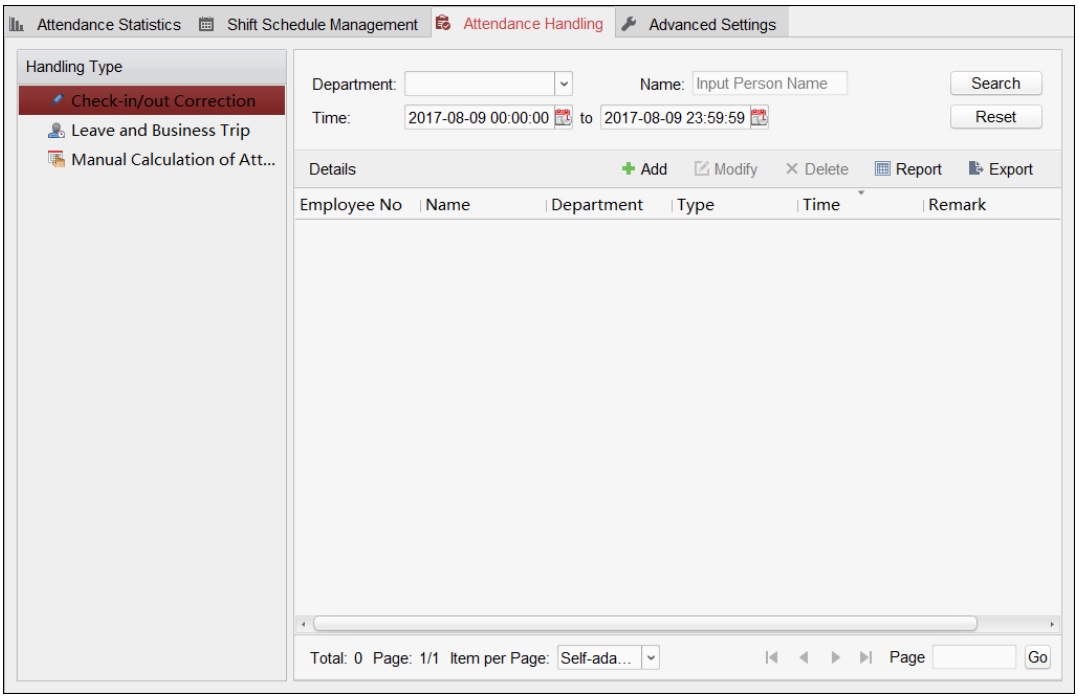

Check-in/out Correction

Purpose:

You can add, edit, delete, search the check-in/out correction and generate the related report. You can also export the check-in/out correction details to local PC.

➢ Add Check-in/out Correction

Steps:

1. Click **Check-in/out Correction** tab.
2. Click **Add** to pop up Add Check-in/out Correction dialog.

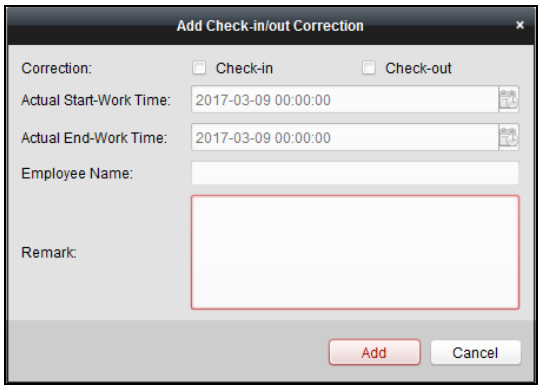

3. Set the check-in/out correction parameters.
   For Check-in Correction: Check **Check-in** checkbox and set the actual start-work time.
   For Check-out Correction: Check **Check-out** checkbox and set the actual end-work time.
4. Click **Employee Name** field and select the person.
   You can also input the keyword and click to search the person you want.
5. (Optional) Input the remark information as desired.
6. Click **Add** to add the check-in/out correction.

The added check-in/out correction will display on the Attendance Handling interface.
(Optional) Select the check-in/out correction and click **Modify** to edit the correction.
(Optional) Select the check-in/out correction and click **Delete** to delete the correction.
(Optional) Click **Report** to generate the check-in/out correction report.
(Optional) Click **Export** to export the check-in/out correction details to local PC.
Note: The exported details are saved in *.csv format.

➢ **Search Check-in/out Correction**

Steps:

1. Click **Check-in/out Correction** tab.
2. Set the searching conditions.
   Department: Select the department from the drop-down list.
   Name: Input the person name.
   Time: Click to set the specified time as time range.
3. Click **Search** to search the check-in/out corrections.
   The check-in/out correction details will display on the list.
   You can also click **Reset** to reset the searching conditions.

Appendix A Tips for Scanning Fingerprint

Recommended Finger

Forefinger, middle finger or the third finger.

Correct Scanning

The figure displayed below is the correct way to scan your finger:

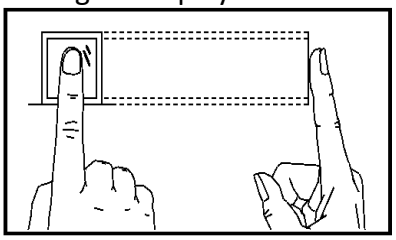

You should press your finger on the scanner horizontally. The center of your scanned finger should align with the scanner center.

Incorrect Scanning

The figures of scanning fingerprint displayed below are wrong:

Vertical

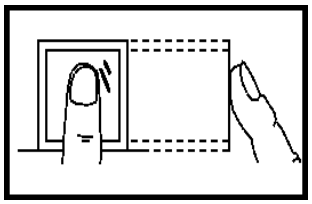

Edge I

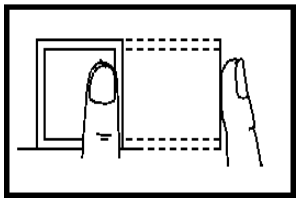

Side

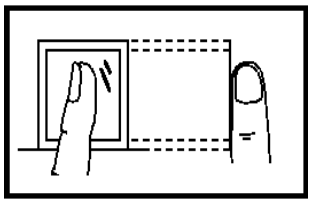

Edge II

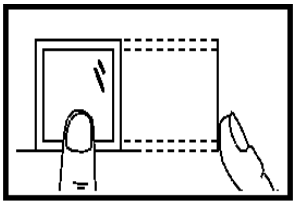

Environment

The scanner should avoid direct high light, high temperature, humid conditions and rain.

When it is dry, the scanner may not recognize your fingerprint successfully. You can blow your finger and scan again after drying the finger.

Others

If your fingerprint is shallow, or it is hard to scan your fingerprint, we recommend you to use other authentication methods.

If you have injuries on the scanned finger, the scanner may not recognize. You can change another finger and try again.

Appendix B DIP Switch Description

DIP Switch Introduction

There is a group of 8-bit DIP switch on the main controller. As the picture shown below, No.1 to No 8 is from the low bit to the high bit.

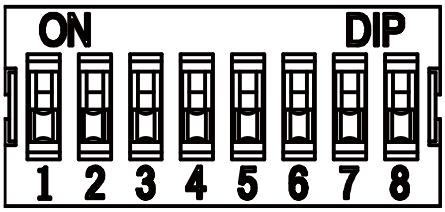

When the switch is towards ON, it means the binary value is 1. Otherwise, it is 0.

If you set the DIP switch like the figure displayed below, its binary value is 00001100, and its decimal value is 12.

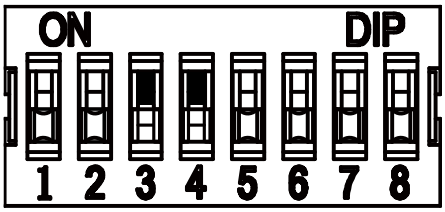

DIP Switch Corresponded Functions

The 8-bit DIP switch corresponded functions on the main controller are as follows:

Bit	Device Mode	Function	Decimal Value	Binary Value
1 to 2	Work Mode	Normal Mode	0	00
		Study Mode	1	01
		Test Mode	2	10
3	Memory Mode	Enable Memory Mode	0	0
		Disable Memory Mode	1	1
4	Keyfob Paring Mode	Enable Keyfob Paring Mode	0	0
		Disable Keyfob Paring Mode	1	1
5 to 8	Passing Mode	Controlled Bi-direction	0	0000
		Controlled Entrance and Prohibit Exit	1	0001
		Controlled Entrance and Free Exit	2	0010
		Free Bi-direction	3	0011
		Free Entrance and Controlled Exit	4	0100
		Free Entrance and Prohibit Exit	5	0101
		Prohibited Bi-direction	6	0110
		Prohibit Entrance and Controlled Exit	7	0111
		Prohibit Entrance and Free Exit	8	1000

Appendix C Table of Audio Index Related Content

Index	Content
1	Authenticated.
2	Card No. does not exist.
3	Card No. and fingerprint mismatch.
4	Climbing over the barrier.
5	Reverse passing.
6	Passing timeout.
7	Intrusion.
8	Force accessing.
9	Tailgating.
10	No permissions.
11	Authentication time out.
13	Authentication failed.
14	Expired card.

010000001081128

See Far, Go Further

UD10535B