Face Recognition Terminal

Quick Start Guide

UDB

© 2020 Hangzhou Hikvision Digital Technology Co., Ltd. All rights reserved.
This Manual is the property of Hangzhou Hikvision Digital Technology Co., Ltd. or its affiliates (hereinafter referred to as "Hikvision"), and it cannot be reproduced, changed, translated, or distributed, partially or wholly, by any means, without the prior written permission of Hikvision. Unless otherwise expressly stated herein, Hikvision does not make any warranties, guarantees or representations, express or implied, regarding to the Manual, any information contained herein.

About this Manual

The Manual includes instructions for using and managing the Product. Pictures, charts, images and all other information hereinafter are for description and explanation only. The information contained in the Manual is subject to change, without notice, due to firmware updates or other reasons. Please find the latest version of this Manual at the Hikvision website (https://www.hikvision.com/).

Please use this Manual with the guidance and assistance of professionals trained in supporting the Product.

Trademarks Acknowledgement

HIKVISION and other Hikvision's trademarks and logos are the properties of Hikvision in various jurisdictions.

Other trademarks and logos mentioned are the properties of their respective owners.

LEGAL DISCLAIMER

TO THE MAXIMUM EXTENT PERMITTED BY APPLICABLE LAW, THIS MANUAL AND THE PRODUCT DESCRIBED, WITH ITS HARDWARE, SOFTWARE AND FIRMWARE, ARE PROVIDED "AS IS" AND "WITH ALL FAULTS AND ERRORS". HIKVISION MAKES NO WARRANTIES, EXPRESS OR IMPLIED, INCLUDING WITHOUT LIMITATION, MERCHANTABILITY, SATISFACTORY QUALITY, OR FITNESS FOR A PARTICULAR PURPOSE. THE USE OF THE PRODUCT BY YOU IS AT YOUR OWN RISK. IN NO EVENT WILL HIKVISION BE LIABLE TO YOU FOR ANY SPECIAL, CONSEQUENTIAL, INCIDENTAL, OR INDIRECT DAMAGES, INCLUDING, AMONG OTHERS, DAMAGES FOR LOSS OF BUSINESS PROFITS, BUSINESS INTERRUPTION, OR LOSS OF DATA, CORRUPTION OF SYSTEMS, OR LOSS OF DOCUMENTATION, WHETHER BASED ON BREACH OF CONTRACT, TORT (INCLUDING NEGLIGENCE), PRODUCT LIABILITY, OR OTHERWISE, IN CONNECTION WITH THE USE OF THE PRODUCT, EVEN IF HIKVISION HAS BEEN ADVISED OF THE POSSIBILITY OF SUCH DAMAGES OR LOSS.

YOU ACKNOWLEDGE THAT THE NATURE OF INTERNET PROVIDES FOR INHERENT SECURITY RISKS, AND HIKVISION SHALL NOT TAKE ANY RESPONSIBILITIES FOR ABNORMAL OPERATION, PRIVACY LEAKAGE OR OTHER DAMAGES RESULTING FROM CYBER-ATTACK, HACKER ATTACK, VIRUS INSPECTION, OR OTHER INTERNET SECURITY RISKS; HOWEVER, HIKVISION WILL PROVIDE TIMELY TECHNICAL SUPPORT IF REQUIRED.

YOU AGREE TO USE THIS PRODUCT IN COMPLIANCE WITH ALL APPLICABLE LAWS, AND YOU ARE SOLELY RESPONSIBLE FOR ENSURING THAT YOUR USE CONFORMS TO THE APPLICABLE LAW. ESPECIALLY, YOU ARE RESPONSIBLE, FOR USING THIS PRODUCT IN A MANNER THAT DOES NOT INFRINGE ON THE RIGHTS OF THIRD PARTIES, INCLUDING WITHOUT LIMITATION, RIGHTS OF PUBLICITY, INTELLECTUAL PROPERTY RIGHTS, OR DATA PROTECTION AND OTHER PRIVACY RIGHTS. YOU SHALL NOT USE THIS PRODUCT FOR ANY PROHIBITED END-USES, INCLUDING THE DEVELOPMENT OR PRODUCTION OF WEAPONS OF MASS DESTRUCTION, THE DEVELOPMENT OR PRODUCTION OF CHEMICAL OR BIOLOGICAL WEAPONS, ANY ACTIVITIES IN THE CONTEXT RELATED TO ANY NUCLEAR EXPLOSIVE OR UNSAFE NUCLEAR FUEL-CYCLE, OR IN SUPPORT OF HUMAN RIGHTS ABUSES.

IN THE EVENT OF ANY CONFLICTS BETWEEN THIS MANUAL AND THE APPLICABLE LAW, THE LATER PREVAILS.

Data Protection

During the use of device, personal data will be collected, stored and processed. To protect data, the development of Hikvision devices incorporates privacy by design principles. For example, for device with facial recognition features, biometrics data is stored in your device with encryption method; for fingerprint device, only fingerprint template will be saved, which is impossible to reconstruct a fingerprint image.

As data controller, you are advised to collect, store, process and transfer data in accordance with the applicable data protection laws and regulations, including without limitation, conducting security controls to safeguard personal data, such as, implementing reasonable administrative and physical security controls, conduct periodic reviews and assessments of the effectiveness of your security controls.

Scan the QR code to get the user manual for detailed information.
Note that mobile data charges may apply if Wi-Fi is unavailable.

Use only power supplies listed in the user instructions:

Model	Manufacturer	Standard
C2000IC12.0-24P-DE	MOSO Power Supply Technology Co., Ltd.	CEE
C2000IC12.0-24P-GB	MOSO Power Supply Technology Co., Ltd.	BS
ADS-24S-12 1224GPG	Shenzhen Honor Electronic Co., Ltd.	CEE

1 Appearance

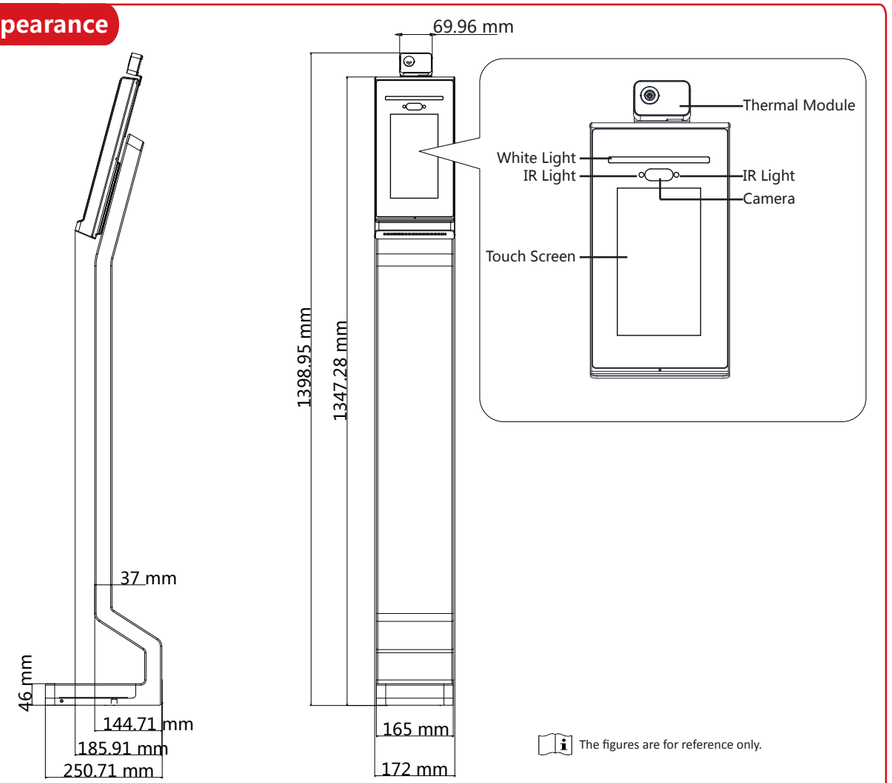

The figures are for reference only.

2 Installation

Installation Environment:

- If installing the device indoors, the device should be at least 2 meters away from the light, and at least 3 meters away from the window or the door.
- Make sure the environment illumination is more than 100 Lux.

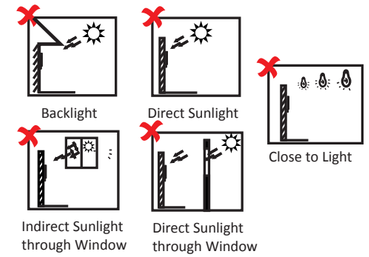

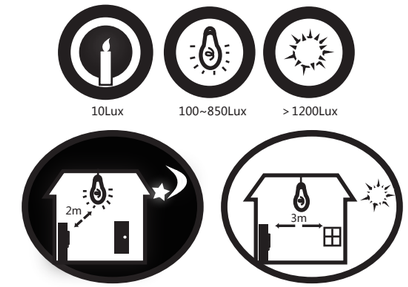

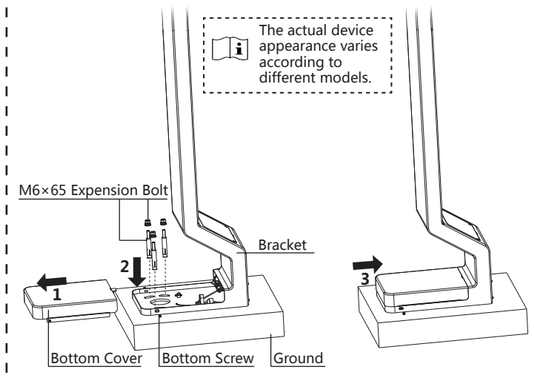

Before you start: Make sure the ground surface has drilled holes for device installation.

Steps:

1. Remove the two bottom screws (2-SC-KM3×5B-JMF) on both sides of the bottom cover. And remove the bottom cover.
2. Align the device with the drilled holes on the ground and insert 3 supplied expension bolts (M6×65). Make sure the expension bolts are higher than the ground.
3. Secure the expension bolts with nuts。
4. Install the bottom cover back on the device with 2 bottom screws.

- The device should be installed on the concrete surface or other non-flammable surfaces.
- The device supports plug & play. You can put the device on the ground and start operation after powering on.

3.1 Device Wiring (Without Secure Door Control Unit)

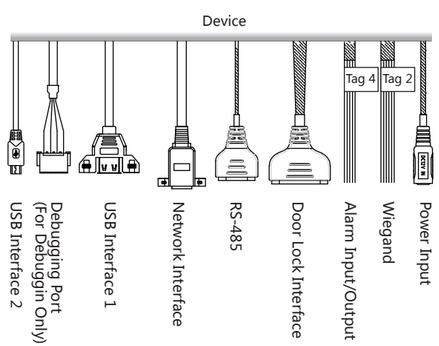

- The wiring diagram of tag 2 and 4 on the left is shown below:

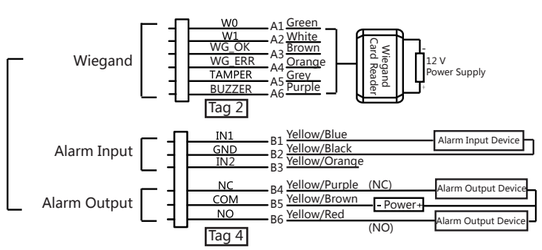

- The Wiegand terminal here is a Wiegand input terminal. You should set the device's Wiegand direction to "Input". If you should connect to an access controller, you should set the Wiegand direction to "Output". For details, see the user manual.
- The power supply should be 12 VDC/3 A, 36 W.

3.2 Device Wiring (With Secure Door Control Unit)

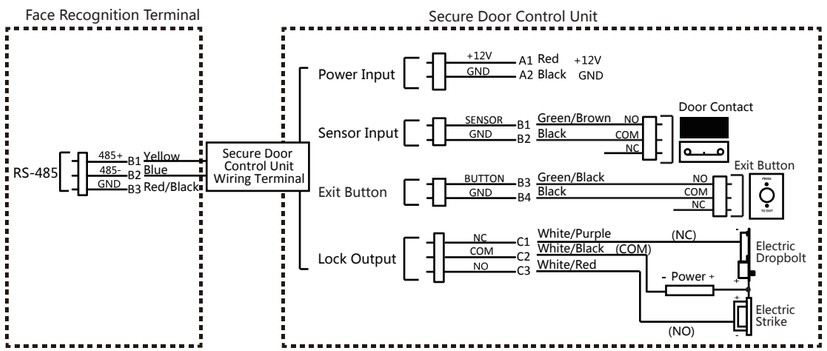

The secure door control unit should connect to an external power supply separately. The suggested external power supply is 12 V, 0.5 A.

4 Activation

Power on and wire the network cable after installation. You should activate the device before the first login.

If the device is not activated yet, it will enter the Activate Device page after powering on.

Steps:

1. Create a password and confirm the password.
2. Tap **Activate** to activate the device.

For other activation methods, see the device user manual.

STRONG PASSWORD RECOMMENDED–
We highly recommend you create a strong password of your own choosing (using a minimum of 8 characters, including upper case letters, lower case letters, numbers, and special characters) in order to increase the security of your product. And we recommend you reset your password regularly, especially in the high security system, resetting the password monthly or weekly can better protect your product.

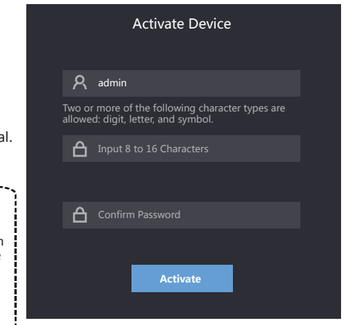

5 Temperature Measurement and Face Mask Settings

1. Use finger to hold the screen surface for 3 s and slide to right/left. Enter the activation password to enter the home page.
2. Tap “Temperature” to enter the Temperature Settings page. Configure the parameters.

- **Enable Temperature Detection:**
  When enabling the function, the device will authenticate the permissions and at the same time take the tempearture. When disabling the device, the device will authenticate the permissions only.
- **Thermal Module IP Address:**
  If you edit the IP address of the thermal module on the platform, you should change it on the device.
- **Over-Temperature Alarm Threshold:**
  Edit the threshold according to actual situation. If the detected temperature is higher than the configured one, an alarm will be triggered. By default, the value is 37.3°。
- **Distance for Measuring Temperature (m):**
  Edit the distance according to actual situation. The distance between the person and the device should be the same as the configured value. Suggested: 0.3 to 0.5 m. By defalt: 0.3 m。
- **Door Not Open When Detecting Abnormal Termperature:**
  When Enabling the function, the door will not open when the detected temperature is higher than the configured temperature threshold. By default, the temperature is enabled.
- **Temperature Measurement Only:**
  When enabling the function, the device will not authenticate the permissions, but only take the temperature. When disabling the function, the device will authenticate the permsissions and at the same time take the temperature.
- **Face with Mask Detection:**
  When enabling the function, the device will pop up a prompt and the door will not open when the detected person is not wear a mask.

6 Add Face Picture

1. Use finger to hold the screen surface for 3 s and slide to right/left and enter the activation password to enter the Home page.
2. Enter the User Management page, tap + to enter the Add User page.
3. Set the user parameters according to actual needs.

Only the devices with the fingerprint module support the fingerprint related functions.

4. Tap Face and collect the face information according to the instructions.
   You can view the captured picture on the screen. Make sure the face picture is in good quality and size.
   For details about the tips and positions when collecting or comparing the face picture, see the contents on the right.
5. If the picture is in good condition, tap the save icon.
   Or tap the try again icon to take another face picture.
6. Tap the save icon save the settings.
   Go back to the initial page to start authentication.
   For other authentication methods, see the device user manual.

Recommended:
Use other authentication methods if the device if affected by the light or other items.
1:N Matching: The device will compare the captured face picture with the ones in the database.
1:1 Matching: The device will compare the captured face picture with the user linked face picture.

Biometric recognition products are not 100% applicable to anti-spoofing environments. If you require a higher security level, use multiple authentication modes.

Tips When Collecting/ Comparing Face Picture

Expression

- Keep your expression naturally when collecting or comparing face pictures, just like the expression in the picture on the right.
- Do not wear hat, sunglasses, or other accessories that can affect the facial recognition function.
- Do not make your hair cover your eyes, ears, etc. and heavy makeup is not allowed.

Posture

In order to get a good quality and accurate face picture, position your face looking at the camera when collecting or comparing face pictures.

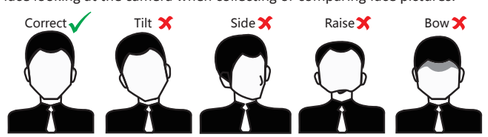

Size

Make sure your face is in the middle of the collecting window.

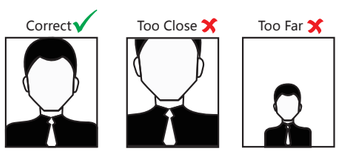

Positions When Collecting/ Comparing Face Picture (Recommended Distance: 0.5m)

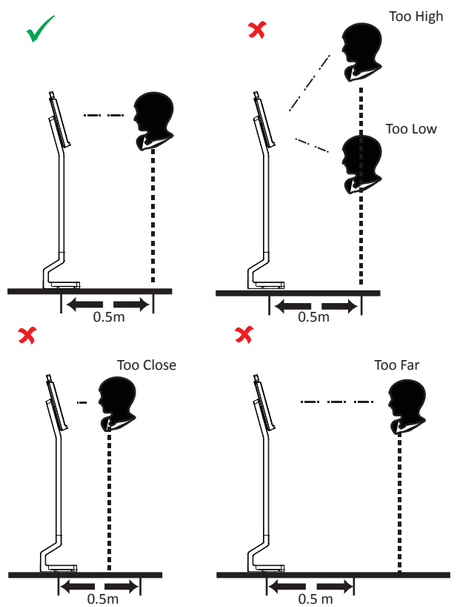

Regulatory Information

FCC Information
Please take attention that changes or modification not expressly approved by the party responsible for compliance could void the user’s authority to operate the equipment.
FCC compliance: This equipment has been tested and found to comply with the limits for a Class B digital device, pursuant to part 15 of the FCC Rules. These limits are designed to provide reasonable protection against harmful interference in a residential installation. This equipment generates, uses and can radiate radio frequency energy and, if not installed and used in accordance with the instructions, may cause harmful interference to radio communications. However, there is no guarantee that interference will not occur in a particular installation. If this equipment does cause harmful interference to radio or television reception, which can be determined by turning the equipment off and on, the user is encouraged to try to correct the interference by one or more of the following measures:
—Reorient or relocate the receiving antenna.
—Increase the separation between the equipment and receiver.
—Connect the equipment into an outlet on a circuit different from that to which the receiver is connected.
—Consult the dealer or an experienced radio/TV technician for help.
This equipment should be installed and operated with a minimum distance 20cm between the radiator and your body.

FCC Conditions
This device complies with part 15 of the FCC Rules. Operation is subject to the following two conditions:
1. This device may not cause harmful interference.
2. This device must accept any interference received, including interference that may cause undesired operation.

EU Conformity Statement

This product and - if applicable - the supplied accessories too are marked with "CE" and comply therefore with the applicable harmonized European standards listed under the RE Directive 2014/53/EU, the EMC Directive 2014/30/EU, the RoHS Directive 2011/65/EU.

2006/66/EC (battery directive): This product contains a battery that cannot be disposed of as unsorted municipal waste in the European Union. See the product documentation for specific battery information. The battery is marked with this symbol, which may include lettering to indicate cadmium (Cd), lead (Pb), or mercury (Hg). For proper recycling, return the battery to your supplier or to a designated collection point. For more information see: *www.recycle-this.info*

2012/19/EU (WEEE directive): Products marked with this symbol cannot be disposed of as unsorted municipal waste in the European Union. For proper recycling, return this product to your local supplier upon the purchase of equivalent new equipment, or dispose of it at designated collection points. For more information see: *www.recyclethis.info*

Safety Instruction
These instructions are intended to ensure that user can use the product correctly to avoid danger or property loss.
The precaution measure is divided into Warnings and Cautions:
Warnings: Neglecting any of the warnings may cause serious injury or death.
Cautions: Neglecting any of the cautions may cause injury or equipment damage.

Warnings
- All the electronic operation should be strictly compliance with the electrical safety regulations, fire prevention regulations and other related regulations in your local region.
- Please use the power adapter, which is provided by normal company. The power consumption cannot be less than the required value.
- Do not connect several devices to one power adapter as adapter overload may cause over-heat or fire hazard.
- Please make sure that the power has been disconnected before you wire, install or dismantle the device.
- When the product is installed on wall or ceiling, the device shall be firmly fixed.
- If smoke, odors or noise rise from the device, turn off the power at once and unplug the power cable, and then please contact the service center.
- If the product does not work properly, please contact your dealer or the nearest service center. Never attempt to disassemble the device yourself. (We shall not assume any responsibility for problems caused by unauthorized repair or maintenance.)

Cautions
- Do not drop the device or subject it to physical shock, and do not expose it to high electromagnetism radiation. Avoid the equipment installation on vibrations surface or places subject to shock (ignorance can cause equipment damage).
- Do not place the device in extremely hot (refer to the specification of the device for the detailed operating temperature), cold, dusty or damp locations, and do not expose it to high electromagnetic radiation.
- The device cover for indoor use shall be kept from rain and moisture.
- Exposing the equipment to direct sun light, low ventilation or heat source such as heater or radiator is forbidden (ignorance can cause fire danger).
- Do not aim the device at the sun or extra bright places. A blooming or smear may occur otherwise (which is not a malfunction however), and affecting the endurance of sensor at the same time.
- Please use the provided glove when open up the device cover, avoid direct contact with the device cover, because the acidic sweat of the fingers may erode the surface coating of the device cover.
- Please use a soft and dry cloth when clean inside and outside surfaces of the device cover, do not use alkaline detergents.
- Please keep all wrappers after unpack them for future use. In case of any failure occurred, you need to return the device to the factory with the original wrapper. Transportation without the original wrapper may result in damage on the device and lead to additional costs.
- Risk of explosion if the battery is replaced by an incorrect type
- Improper replacement of the battery with an incorrect type may defeat a safeguard (for example, in the case of some lithium battery types).
- This equipment is not suitable for use in locations where children are likely to be present.
- Do not dispose of the battery into fire or a hot oven, or mechanically crush or cut the battery, which may result in an explosion.
- Do not leave the battery in an extremely high temperature surrounding environment, which may result in an explosion or the leakage of flammable liquid or gas.
- Do not subject the battery to extremely low air pressure, which may result in an explosion or the leakage of flammable liquid or gas.
- Dispose of used batteries according to the instructions
- Indoor use. When installing the device indoors, the device should be at least 2 meters away from the light, and at least 3 meters away from the window or the door.