HIKVISION

HikDashcam · N6 PRO
User Manual

UD25868B

A Legal Statement

©2021 Hangzhou HikAuto Technology Co., Ltd. All rights reserved.

Aboutthis Manual

The Manual includes instructions for using and managing the Product. Pictures, charts, images and all other information hereinafter are for description and explanation only. The information contained in the Manual is subjectto change, without notice, due to firmware updates or other reasons.

Trademarks

- HIKVISION and other Hikvision's trademarks and logos are the properties of Hikvision in various jurisdictions.
- Other trademarks and logos mentioned are the properties of their respective owners.

Disclaimer

TO THE MAXIMUM EXTENT PERMITTED BY APPLICABLE LAW, THIS MANUAL AND THE PRODUCT DESCRIBED, WITH ITS HARDWARE, SOFTWARE AND FIRMWARE, ARE PROVIDED "AS IS" AND "WITH ALL FAULTS AND ERRORS". HIKAUTO MAKES NO WARRANTIES, EXPRESS OR IMPLIED, INCLUDING WITHOUT LIMITATION, MERCHANTABILITY, SATISFACTORY QUALITY, OR FITNESS FOR A PARTICULAR PURPOSE. THE USE OF THE PRODUCT BY YOU IS AT YOUR OWN RISK. IN NO EVENT WILL HIKAUTO BE LIABLE TO YOU FOR ANY SPECIAL, CONSEQUENTIAL, INCIDENTAL, OR INDIRECT DAMAGES, INCLUDING, AMONG OTHERS, DAMAGES FOR LOSS OF BUSINESS

A Legal Statement

PROFITS, BUSINESS INTERRUPTION, OR LOSS OF DATA, CORRUPTION OF SYSTEMS, OR LOSS OF DOCUMENTATION, WHETHER BASED ON BREACH OF CONTRACT, TORT (INCLUDING NEGLIGENCE), PRODUCT LIABILITY, OR OTHERWISE, IN CONNECTION WITH THE USE OF THE PRODUCT, EVEN IF HIKAUTO HAS BEEN ADVISED OF THE POSSIBILITY OF SUCH DAMAGES OR LOSS.

YOU ACKNOWLEDGE THAT THE NATURE OF INTERNET PROVIDES FOR INHERENT SECURITY RISKS, AND HIKAUTO SHALL NOT TAKE ANY RESPONSIBILITIES FOR ABNORMAL OPERATION, PRIVACY LEAKAGE OR OTHER DAMAGES RESULTING FROM CYBER-ATTACK, HACKER ATTACK, VIRUS INFECTION, OR OTHER INTERNET SECURITY RISKS; HOWEVER, HIKAUTO WILL PROVIDE TIMELY TECHNICAL SUPPORT IF REQUIRED.

YOU AGREE TO USE THIS PRODUCT IN COMPLIANCE WITH ALL APPLICABLE LAWS, AND YOU ARE SOLELY RESPONSIBLE FOR ENSURING THAT YOUR USE CONFORMS TO THE APPLICABLE LAW. ESPECIALLY, YOU ARE RESPONSIBLE, FOR USING THIS PRODUCT IN A MANNER THAT DOES NOT INFRINGE ON THE RIGHTS OF THIRD PARTIES, INCLUDING WITHOUT LIMITATION, RIGHTS OF PUBLICITY, INTELLECTUAL PROPERTY RIGHTS, OR DATA PROTECTION AND OTHER PRIVACY RIGHTS. YOU SHALL NOT USE THIS PRODUCT FOR ANY PROHIBITED END-USES, INCLUDING THE DEVELOPMENT OR PRODUCTION OF WEAPONS OF MASS DESTRUCTION, THE DEVELOPMENT OR PRODUCTION OF CHEMICAL OR BIOLOGICAL WEAPONS, ANY ACTIVITIES IN THE CONTEXT RELATED TO ANY NUCLEAR EXPLOSIVE OR UNSAFE NUCLEAR FUEL-CYCLE, OR IN SUPPORT OF HUMAN RIGHTS ABUSES.

IN THE EVENT OF ANY CONFLICTS BETWEEN THIS MANUAL AND THE APPLICABLE LAW, THE LATER PREVAILS.

B Regulatory Information

FCC Information

Please take attention that changes or modification not expressly approved by the party responsible for compliance could void the user's authority to operate the equipment.

FCC compliance: This equipment has been tested and found to comply with the limits for a Class B digital device, pursuantto part 15 ofthe FCC Rules. These limits are designed to provide reasonable protection against harmful interference when the equipmentis operated in a residential environment. This equipment generates, uses and can radiate radio frequency energy and, if notinstalled and used in accordance with the instructions, may cause harmful interference to radio communications. However, there is no guarantee that interference will not occur in a particular installation. Ifthis equipment does cause harmful interference to radio or television reception, which can be determined by turning the equipment off and on, the user is encouraged to try to correctthe interference by one or more ofthe following measures:

—Reorient or relocate the receiving antenna.

—Increase the separation between the equipment and receiver.

—Connectthe equipmentinto an outlet on a circuit differentfrom that to which the receiver is connected.

—Consultthe dealer or an experienced radio/TV technician for help

FCC Conditions

This device complies with part 15 ofthe FCC Rules. Operation is subject to the following two conditions:

1. This device may not cause harmful interference.
2. This device must accept any interference received, including interference that may cause undesired operation.

The equipment should be installed and operated with a minimum distance 20 cm between the radiator and your body.

B Regulatory Information

EU Conformity Statement

This product and - if applicable - the supplied accessories too are marked with "CE" and comply therefore with the applicable harmonized European standards listed under the RE Directive 2014/53/EU, the EMC Directive 2014/30/EU, the LVD Directive 2014/35/EU, the RoHS Directive 2011/65/EU.

2012/19/EU (WEEE directive): Products marked with this symbol cannot be disposed of as unsorted municipal waste in the European Union. For proper recycling, return this productto your local supplier upon the purchase of equivalent new equipment, or dispose ofit at designated collection points. For more information see: www.recyclethis.info.

2006/66/EC (battery directive): This product contains a battery that cannot be disposed of as unsorted municipal waste in the European Union. See the product documentation for specific battery information. The battery is marked with this symbol, which may include lettering to indicate cadmium (Cd), lead (Pb), or mercury (Hg). For proper recycling, return the battery to your supplier or to a designated collection point. For more information see: www.recyclethis.info.

Industry Canada ICES-003 Compliance

This device meets the CAN ICES-3 (B)/NMB-3(B) standards requirements.

This device complies with Industry Canada licence-exempt RSS standard(s). Operation is subjectto the following two conditions:
(1) this device may not cause interference, and

B Regulatory Information

(2) this device must accept any interference, including interference that may cause undesired operation ofthe device.
Le présent appareil est conforme aux CNR d'Industrie Canada applicables aux appareils radioexempts de licence. L'exploitation est autorisée aux deux conditions suivantes :
(1) l'appareil ne doit pas produire de brouillage, et
(2) l'utilisateur de l'appareil doit accepter tout brouillage radioélectrique subi, même si le brouillage est susceptible d'en compromettre le fonctionnement.
Under Industry Canada regulations, this radio transmitter may only operate using an antenna of a type and maximum (or lesser) gain approved for the transmitter by Industry Canada. To reduce potential radio interference to other users, the antenna type and its gain should be so chosen thatthe equivalentisotropically radiated power (e.i.r.p.) is not more than that necessary for successful communication.
Conformément à la réglementation d'Industrie Canada, le présent émetteur radio peut
fonctionner avec une antenne d'un type et d'un gain maximal (ou inférieur) approuvé pour l'émetteur par Industrie Canada. Dans le but de réduire les risques de brouillage radioélectrique à l'intention des autres utilisateurs, il faut choisir le type d'antenne et son gain de sorte que la puissance isotrope rayonnée équivalente (p.i.r.e.) ne dépasse pas l'intensité nécessaire à l'établissement d'une communication satisfaisante.

This equipment should be installed and operated with a minimum distance 20cm between the radiator and your body.
Cet équipement doit être installé et utilisé à une distance minimale de 20 cm entre le radiateur et votre corps.

C Packing List

1. Dashcam × 1
2. Power Cord × 1
3. Strap × 1
4. Camera × 1
5. Accessory Package × 1
6. User Manual × 1

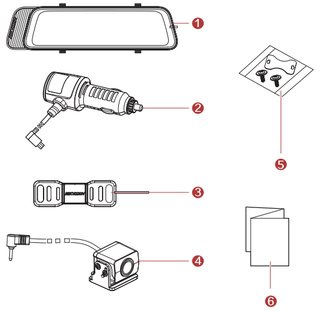

D Parts Introduction

1. Camera Interface 2. USB Interface 3. TF Card Slot 4. GPS Interface

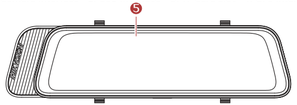

5. Touch Screen

6. Microphone 7. Power Button

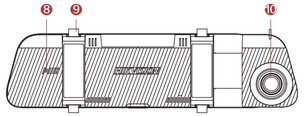

8. Loudspeaker 9. Strap 10. Lens

E Install TF Card

Insert TF Card

Insertthe golden contact surface ofthe TF card towards the rear of the dashcam. Push the TF card to the end until it clicks.

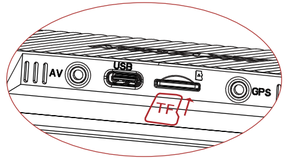

Remove TF Card

Push the edge ofthe TF card inward until you hear/feel a click, and then push it out ofthe TF card slot until you can remove it.

1. Please purchase a TF card from a regular channel. For the stability and efficiency of data storage, itis recommended to use a high-speed TF card above Class10.
2. Before inserting and removing the TF card, please be sure to power off the recorder to avoid damaging the TF card.
3. Please formatthe TF card with this machine before use.

E Installation

1

Clip the dashcam to the rearview mirror ofthe car. Adjustthe position ofthe lens so thatthe lens is exposed. (The position of the lens can be adjusted by telescoping, and the angle can also be fine-tuned up, down, left and right, the maximum can be adjusted 13°)

2

Use the straps to cover the strap buckles on the upper and lower ends ofthe dashcam to fix the dashcam on the rearview mirror ofthe car.

3

Paste the device onto the electrostatic film and route cable to the disater box for power supply.

4

Insertthe power cord into the cigarette lighter in the car.

E Install Camera

1 Peel offthe adhesive release paper on the camera bracket. Install camera on the appropriate location near the license plate.

2 Connectthe camera to the dashcam according to the following cable run.

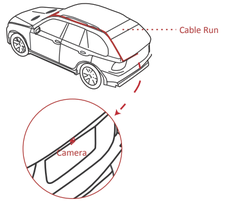

3 Connectthe red reversing line ofthe camera to the reverse light power line ofthe car.

H Cautions

Safety Instruction

These instructions are intended to ensure that users can use the product correctly to avoid danger or property loss.

Cautions: Injury or equipment damage may occur if any ofthe cautions are neglected.

- In the use ofthe dashcam, you must be in strict compliance with the local laws and regulations.
- You are recommended to install the dashcam on the location of rear mirror to ensure the dashcam can record with the best surveillance view. DO NOT install the dashcam on the location that will block the driver's sight.
- Keep the user manual properly for future reference. See initial connection of dashcam in user manual.
- Purchase the TF card from legal channel. To ensure safe and stable data transmission, itis recommended to use TF card of Class 10 or above.
- Formatthe new TF card first before using the card.
- To protect TF card from damage, shut down the dashcam before installing and uninstalling TF card.
- Ifthe dashcam is directly connected with the vehicle power system, you are recommended to power off the dashcam when the engine is off. Disconnect cigarette lighter to avoid insufficient voltage and abnormal startup. Reconnect cigarette lighter to ensure dashcam work normally when you startthe car again.
- Operating temperature is from -20˚C to 70˚C (-4˚F to 158˚F). To protectthe dashcam, DO NOT use itin high temperature, low temperature, or high-humidity environment. Keep the dashcam from rain and dust.
- The manual is subjectto update. The functions of dashcam may vary according to different models.

*The driving assistance function ofthe device only sends alarm or warning to the driver and cannot replace the driver's judgement and operation. With the device, you also should drive carefully to avoid traffic accident or violation. Pedestrian or object recognition failure or recognition error may occur due to external factors. DO NOT overly rely on the driving assistance function.

I Troublshooting

Trouble	Solution
The dashcam drops easily.	· Clean the windshield before installation. · Check whether the 3M tape is tightly sticked to the electrostatic film before the installation.
Starting the dashcam failed.	· Check whether the vehicle is started and power supply is normal. · Check whether the car charger is tightly connected. · Restore to defaults: hold the **RESET** button until the startup music is heard.
The dashcam powers off easily.	· Make sure the power cord is in good condition. · Make sure the power cord is tightly connected to the according interfaces.
Recording is abnormal and indicator is unlit.	· Make sure thatthe dashcam started up successfully. · Check whether the TF card is inserted. · Check the status of TF card, e.g. its format, its lifespan. · Change TF card ifitis not well.
Recording is blurred.	· Make sure the protective film is peeled off. · Check whether the windshield or the lens of dashcam is blurred.
Recording is mute.	· Set audio settings on the device or turn on sound recording in HikDashcam app. · Turn on sound through the the audio control function ofthe dashcam.
Dashcam reboots itself.	· Check whether the car charger is tightly connected. · Check whether the car charger is equipped with power supply interface of 5 VDC, ≥ 2 A.
Mobile phone cannot connectto dashcam.	Make sure HikDashcam app is installed. · Please restartthe dashcam to the app.

H Troubleshooting

Trouble	Solution
The mobile phone cannot display recordings.	· It may be relevant with the player or system ofthe phone. Please connect TF card to your computer and display the recordings.
TF card is not detected when you connect dashcam to computer with the supplied power cord.	· Dashcam does not support data transmission and the supplied power cord is only for charging. · If you need to transfer data, please connect TF card to your computer.
Wi-Fi connection takes a long time.	· It may be caused by the interferrence ofthe surrounding Wi-Fi signals. Please use the dashcam in an environment ofless interferrence. · Shut down unnecessary programs in your phone to release some resources for HikDashcam app and reconnect Wi-Fi.
Dashcam Wi-Fi password is forgotten.	· The default password is 1234567890. If you have revisied the password, regain the password by the following steps. 1. Hold the **RESET** button on dashcam until the startup music is heard and the dashcam is restored to defaults. 2. Go to Wi-Fi Connection interface in HikDashcam app. 3. Select Wi-Fi SSID and log in with default password 1234567890.
No GPS signal.	· Check whether the GPS function is enabled. Normally, the GPS function is enabled by default. · Make sure the device is notin the places of weak signal or no signal, such as underground garage. · Make sure there is no metal around the device because metal will interfere with GPS signal. · Make sure the location where the device is installed is not pastd with radiation protection film. The film will interfere with GPS signal.