THINKWARE DASH CAM™

ARC 700

User Guide

This product records videos while the vehicle is operating.
Read and follow the instructions in this guide to properly use and maintain the product.

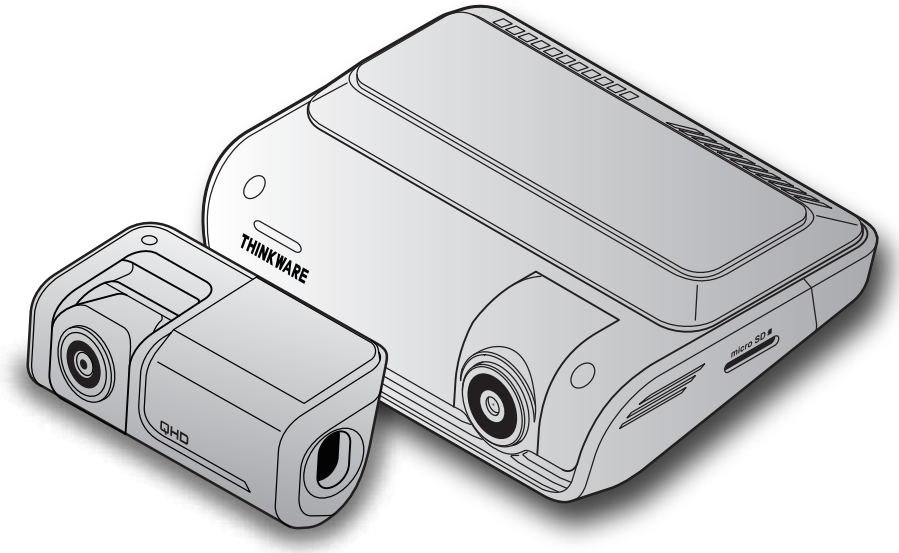

Before using the product

About the product

This product records videos while the vehicle is operating. Use this product only for reference when investigating incidents or road accidents. This product is not guaranteed to record all events. The device may not record accidents with impacts that are too minor to activate the impact sensor or accidents with massive impacts that cause the vehicle's battery voltage to deviate.

Video recording does not begin until the product is completely turned on (booted up). To ensure that all vehicle events are recorded, wait until the product is completely booted up after turning it on, and then begin operating the vehicle.

THINKWARE is not responsible for any loss caused by an accident, nor is it responsible for providing any support regarding the outcome of an accident.

Depending on the vehicle's configuration or operating conditions, such as the installation of remote door lock devices, ECU settings, or TPMS settings, some product features may not be supported, and different firmware versions may influence the product's performance or features.

About the user guide

The information provided in the guide may change when the manufacturer updates its service policy.

This user guide is intended for THINKWARE ARC700 models only, and it may contain technical errors, editorial errors, or missing information.

Copyrights

All rights for the content and maps in this guide are reserved by THINKWARE and are protected under copyright laws. All unauthorized duplication, revision, publication, or distribution of this guide without written consent from THINKWARE is prohibited and is eligible for criminal charges.

Registered trademarks

THINKWARE ARC700 is a registered trademark of THINKWARE.

Other product logos and service names in this guide are trademarks of the relevant companies.

Turning voice recording ON or OFF

Some jurisdictions may prohibit recoding voice in the vehicle or may require that all passengers have knowledge of the recording and provide consent before you record voice in the vehicle. It is your responsibility to know and follow all laws and restrictions for your jurisdiction.

The device can record voice using the integrated microphone while recording video. Voice recording is ON by default. Please refer to the manual to turn voice recording on or off at any time.

Contents

Safety information 4

1. Product overview 6
1.1 Included items 6
1.1.1 Standard items 6
1.1.2 Accessories (sold separately) 6
1.2 Part names 7
1.2.1 Front camera (main unit) - front view 7
1.2.2 Front camera (main unit) - rear view 8
1.2.3 Rear camera 9
1.3 Removing and inserting the memory card 9

2. Installing the product 10
2.1 Installing the front camera (main unit) 10
2.1.1 Selecting an installation location 10
2.1.2 Securing the product 10
2.1.3 Connecting the power cable 12
2.2 Installing the rear camera 15
2.2.1 Selecting an installation location 15
2.2.2 Securing the rear camera 15
2.2.3 Connecting the rear camera cable 16
2.3 Installing the RADAR module (optional) 18

3. Using recording features 19
3.1 Turning the product on or off 19
3.2 Learning about file storage locations 19
3.3 Using the continuous recording feature 19
3.4 Recording manually 20
3.5 Using parking mode 20
3.6 Using the Super Night Vision 22
3.7 Using the HDR(High Dynamic Range) 22

4. Using the mobile viewer 23
4.1 Connect the product to a smartphone 23
4.2 Viewing the mobile viewer screen layout 23

5. Using the PC viewer 24
5.1 System requirements 24
5.2 Learning about the PC viewer 24
5.2.1 Downloading the PC viewer 24
5.2.2 Installing the PC viewer 24
5.2.3 PC viewer screen layout 25
5.2.4 Playing recorded videos on the PC viewer 26

6. Settings 27
6.1 Managing the memory card 27
6.2 Setting the Camera 27
6.3 Setting recording features 28
6.4 Setting road safety features 29
6.5 Configuring the system settings 29

7. Upgrading the firmware 30

8. Troubleshooting 31

9. Specifications 32

Safety information

Read the following safety information to properly use the product.

Safety symbols in this guide

"Warning" - Indicates a potential hazard which, if not avoided, may result in injury or death.

"Caution" - Indicates a potential hazard which, if not avoided, may result in minor injury or property damage.

"Note" - Provides useful information to help users better utilize the product's features.

Safety information for proper use

Driving and product operation

- **Do not operate the product while driving a vehicle.** Distraction while driving may cause accidents and result in injury or death.
- **Install the product in places where the driver's view is not obstructed.** Obstruction of the driver's vision may cause accidents and result in injury or death. Check with your state and municipal laws before mounting the product to the windshield.

Power supply

- **Do not operate or handle the power cable with wet hands.** Doing so may result in electrocution.
- **Do not use damaged power cables.** Doing so may result in electrical fire or electrocution.
- **Keep the power cable away from all heat sources.** Failure to do so may cause the power cord insulation to melt, resulting in electrical fire or electrocution.
- **Use the power cable with the correct connector and make sure the power cable is connected securely and is firmly in place.** Failure to do so may result in electrical fire or electrocution.
- **Do not modify or cut the power cable.** Also, do not place heavy objects on the power cable or pull, insert, or bend the power cable using excessive force. Doing so may result in electrical fire or electrocution.

- **Use only genuine accessories from THINKWARE or an authorized THINKWARE dealer.** THINKWARE does not guarantee compatibility and normal operation of third-party accessories.
- **When connecting the power cable to the product, ensure that the connection between the cable plug and the power cable connector on the product is secure.** If the connection is loose, the power cable may become disconnected due to vehicle vibration. Video recording is not available if the power connector is disconnected.

Children and pets

Ensure that the product is out of the reach of children and pets. If the product breaks, it may result in fatal damage.

Other information about the product

Product management and operation

- **Do not expose the product to direct sunlight or intense light.** The lens or internal circuitry may fail otherwise.
- **Use the product at a temperature between 14°F and 140°F (-10°C to 60°C) and store the product at a temperature between -4°F and 158°F (-20°C to 70°C).** The product may not function as designed and some permanent physical damages may result if it is operated or stored out of the specified temperature ranges. Such damages are not covered by the warranty.
- **Frequently check the product for the proper installation position.** Impact caused by extreme road conditions may alter the installation position. Ensure that the product is positioned as instructed in this guide.
- **Do not apply excessive force when pressing the buttons.** Doing so may damage the buttons.
- **Do not use chemical cleaners or solvents to clean the product.** Doing so may damage plastic components of the product. Clean the product using a clean, soft, and dry fabric.
- **Do not disassemble the product or subject the product to impact.** Doing so may damage the product. Unauthorized disassembly of the product voids the product warranty.
- **Handle with care.** If you drop, mishandle, or expose the product to external shocks, it may cause damage and/or result in the malfunction of the product.
- **Do not attempt to insert foreign objects into the device.**
- **Avoid excessive humidity and do not allow any water to enter the product.** Electronic components inside the product may fail if exposed to humidity or water.

- Depending on the make and model of your car, the power may be constantly supplied to the dash cam even when the ignition is turned off. Installation of the device to a continuously powered 12V outlet could result in vehicle battery drainage.
- This device is designed to record video while the vehicle is in operation. The quality of the video might be affected by weather conditions and the road environment, such as whether it is day or night, presence of street lighting, entering/exiting tunnels, and the surrounding temperature.
- THINKWARE is NOT responsible for the loss of any recorded video during operation.
- Although the device was designed to withstand high-impact car collisions, THINKWARE does not guarantee the recording of accidents when the device is damaged as a result of the accident.
- Keep the windshield and camera lens clean for optimal video quality. Particles and substances on the camera lens or windshield may reduce the quality of the recorded videos.
- This device is intended to be used inside the vehicle only.

1. Product overview

1.1 Included items

Ensure that all the items are included when you open the product box.

1.1.1 Standard items

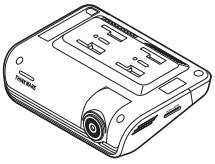

Front camera (main unit)

Mount

Rear camera

Rear camera cable

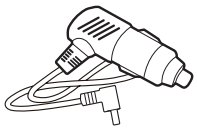

Car charger

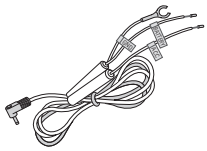

Hardwiring cable

Adhesive cable holder

microSD memory card (consumable)

Warranty & CS information

The standard items may change without prior notice.

1.1.2 Accessories (sold separately)

RADAR module

GPS reception may be affected by interference from the vehicle's windshield, particularly those treated with anti-UV protective coating, or built-in defroster. It is recommended that an external GPS receiver is used when the GPS signal is weak or when you cannot get a GPS signal.

1.2 Part names

1.2.1 Front camera (main unit) - front view

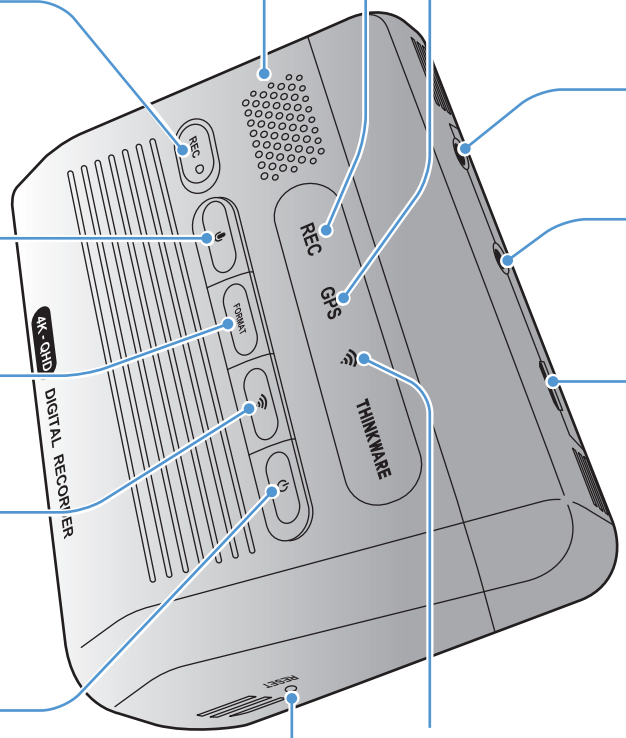

Speaker
Outputs the voice guide and buzzer sounds to indicate the product's status.

REC LED
Indicates the recording status.

GPS LED
Indicates the GPS connection status.

Manual recording button
Press to start manual recording.

DC-IN power port
Used to connect the power cable.

Voice recording button
Press to enable or disable voice recording.

RADAR port
Used to connect the RADAR module (optional).

Format button
Press and hold to format the memory card.

V-IN input port
Used to connect the rear camera.

Connection button
Press to connect the product to a smartphone via Bluetooth or Wi-Fi network.

Power button
- Press and hold to turn off the product.
- Press to turn on the product.

Connection LED
Indicates the Wi-Fi and Bluetooth connection status.

Reset button
Insert the tip of a sharp object to reset the product when an error occurs.

In high temperature environments, Bluetooth and Wi-Fi connections may not be available to protect the dashcam. If the connection fails, try reconnecting at a normal temperature.

- To reset the product, press and hold the voice recording ( ) and manual recording (**REC**) buttons simultaneously until you hear beeps.
- The security LED status may vary depending on the selected mode.
- Refer to the following table to check the status of the product using the LED indicators.
  For more information about the REC LED, refer to "3.3 Using the continuous recording feature" on page 19.

LED	LED status	Operation description
BT/WiFi	(light on)	Wi-Fi connected
	(light on)	Bluetooth on/Bluetooth pairing
	(flickers)	Bluetooth unpaired
	> (flickers)	Bluetooth/Wi-Fi reset
	(light on for 5 seconds)	When pressing the Wi-Fi button when Bluetooth/Wi-Fi is OFF in a high temperature environment
GPS	(light on)	GPS connected
Misc.	Wi-Fi > REC > GPS (flickers)	Firmware upgrade

1.2.2 Front camera (main unit) - rear view

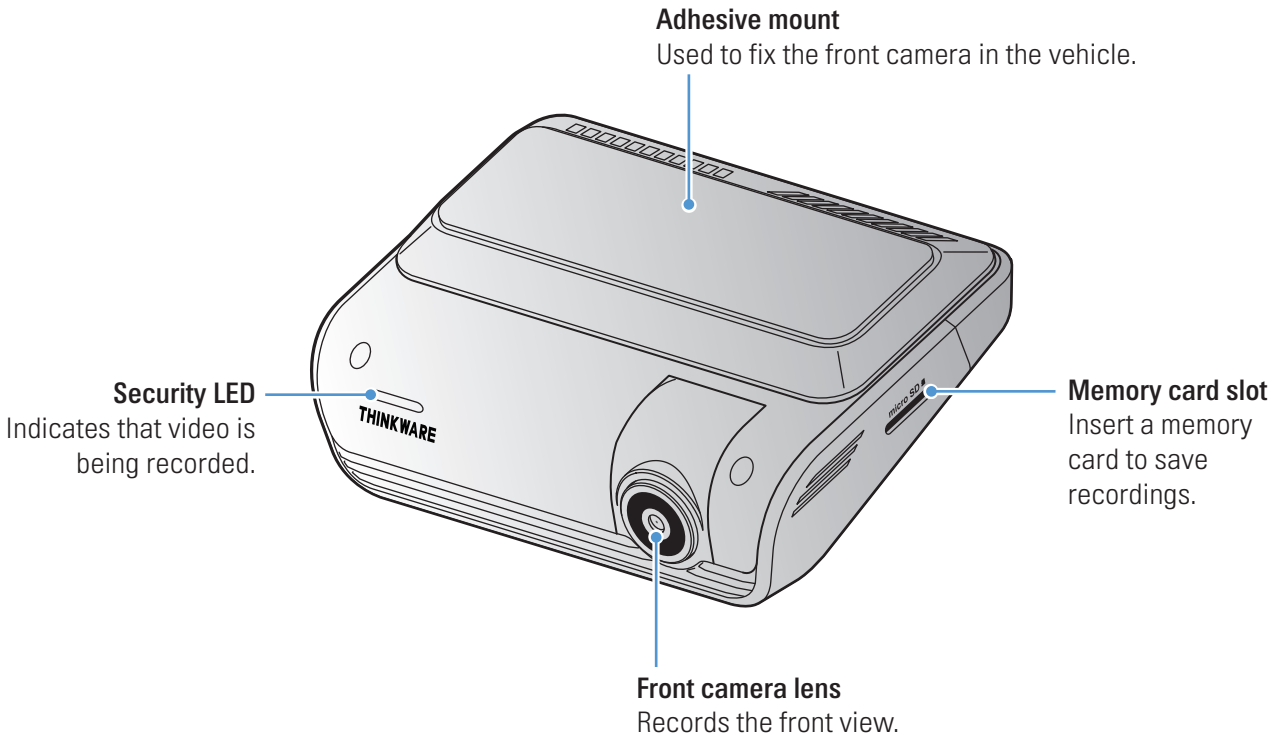

1.2.3 Rear camera

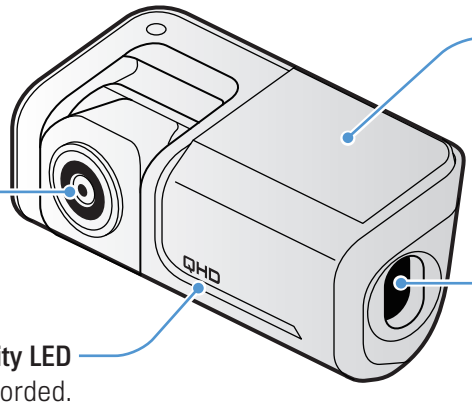

Adhesive mount
Used to fix the rear camera in the vehicle.

Rear camera lens
Records the rear view.

Connection port
Used to connect the rear camera to the front camera using a rear camera cable.

Security LED
Indicates that video is being recorded.

Depending on the laws and regulations of the country, the security LED specifications may be different.

1.3 Removing and inserting the memory card

Follow the instructions to remove the memory card from the product or to insert the memory card into the product.

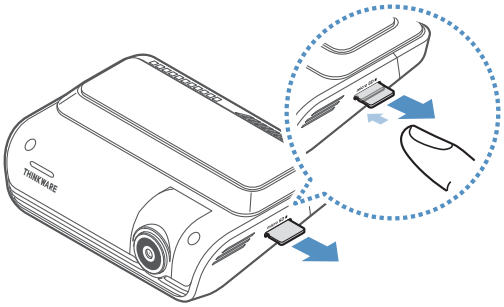

Before removing the memory card, ensure that the product is turned off. Gently push the bottom of the memory card with your fingernail to release it, and then remove it from the product.

To insert the memory card, check the insertion direction marked on the product. Then insert the memory card into the memory card slot in the correct direction and press it until you hear a click.

- Ensure that the product is turned off before removing the memory card. The recorded video files may be corrupted or lost if you remove the memory card while the product is on.
- Ensure that the memory card is in the correct direction before inserting it into the product. The memory card slot or the memory card may be damaged if it is inserted incorrectly.
- Use only authentic memory cards from THINKWARE. THINKWARE does not guarantee compatibility and normal operation of third-party memory cards.

To prevent loss of recorded video files, periodically back up the video files on a separate storage device.

2. Installing the product

2.1 Installing the front camera (main unit)

Follow the instructions to properly install the product.

2.1.1 Selecting an installation location

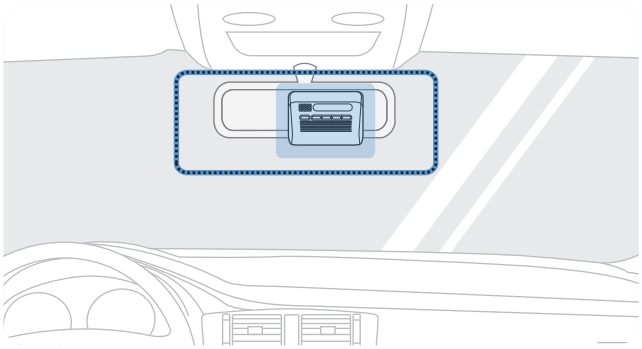

Select an installation location that can record the entire view in front of the vehicle without obstructing the driver's vision. Ensure that the front camera lens is located in the center of the windshield.

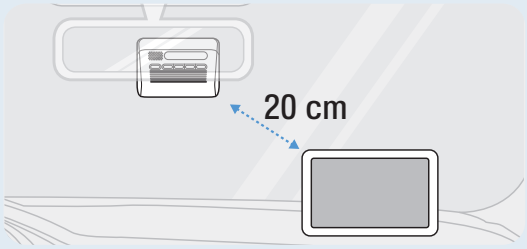

If a GPS navigating device is installed on the dashboard, its GPS reception may be affected depending on the dashboard camera's installation location.
Adjust the installation location of the GPS navigating device to ensure that the two devices are separated by at least 20 centimeters (approximately 8 inches).

2.1.2 Securing the product

Follow the instructions to secure the product at the installation location.

1 After determining the installation location, wipe the installation location on the windshield with a dry cloth.

2

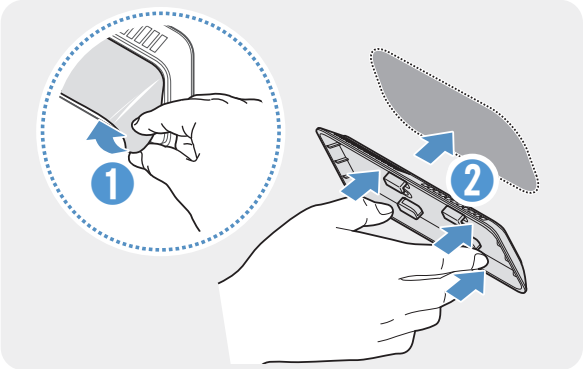

Remove the protective film from the adhesive mount, and then press the mount to the installation location. Push the mount against the windshield to ensure that the mount is firmly fixed.

3

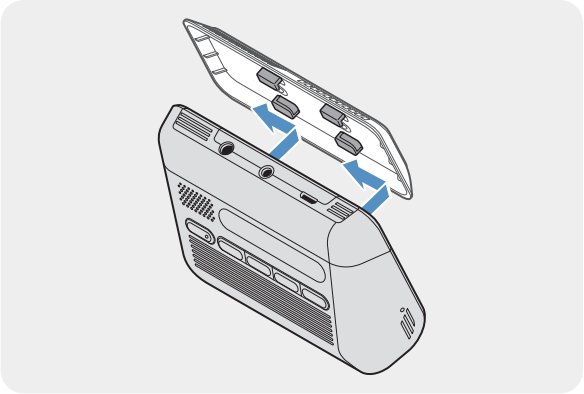

Align the product to the mount, and then slide it into the locking position until you hear a click.

- The product may fall and be damaged during vehicle operation if it is not firmly fixed to the mount.
- If you need to remove the mount from the windshield to alter the installation location, be careful not to damage the windshield's film coat.

4

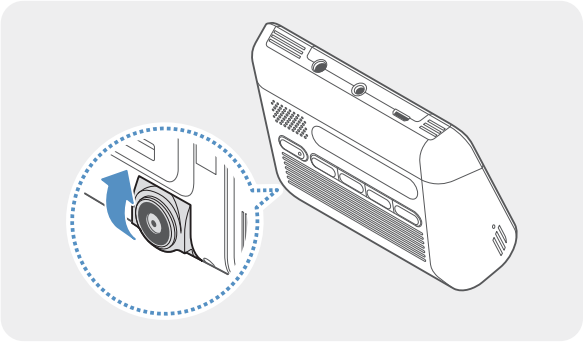

Set the vertical angle of the camera appropriately.

If the product and mount are not fully connected, the red part of the slide lock will show.

To confirm the camera angle, record a video after installation and check the video using the mobile viewer or the PC viewer. If necessary, adjust the camera angle again. For more information about the mobile viewer or the PC viewer, refer to "4. Using the mobile viewer" on page 23 or "5. Using the PC viewer" on page 24.

2.1.3 Connecting the power cable

When the engine and electrical accessories are turned off, connect the continuous power cable or the cigar socket power cable to the product.

Connecting the continuous power cable

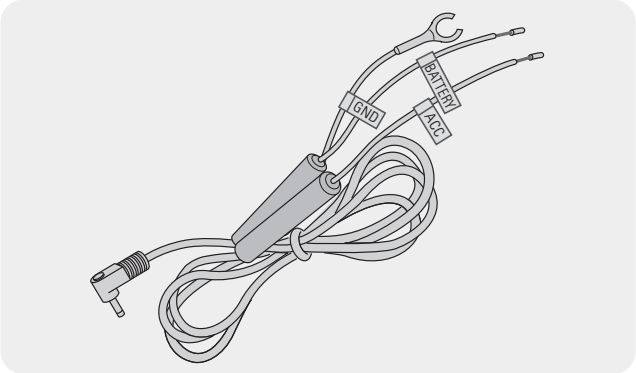

If you connect the product to the vehicle via the continuous power cable, the camera continues operating even when the vehicle is not operating (parking mode). In parking mode, the camera detects impacts to the vehicle and nearby motion and records video.

For more information about parking mode, refer to "3.5 Using parking mode" on page 20.

- The continuous power cable must be professionally installed in the vehicle by a trained mechanic. Contact an authorized service center to connect the continuous power cable to the vehicle. If the product is not installed properly, the product may be damaged or an electrical fire or electrocution may occur.
- Use the authentic THINKWARE continuous power cable only. Using other manufacturer's cable may damage the product or cause electrocution due to the voltage difference.
- When connecting the continuous power cable, pay special attention to wiring. If the wires are connected incorrectly, the product or the vehicle may be damaged.

1

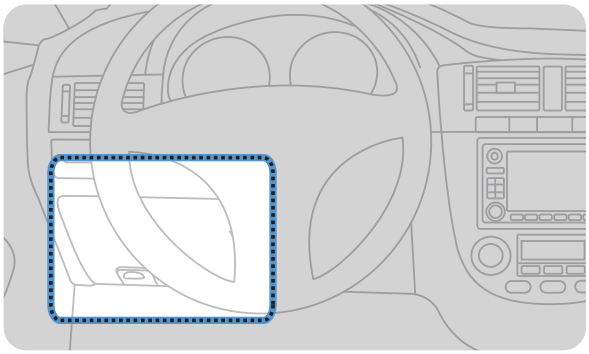

Find the vehicle's fuse box. Usually the fuse box is installed under the driver's seat.

The location of the fuse box may differ depending on the make and model of the vehicle. For more information, refer to your vehicle's owner's manual.

2

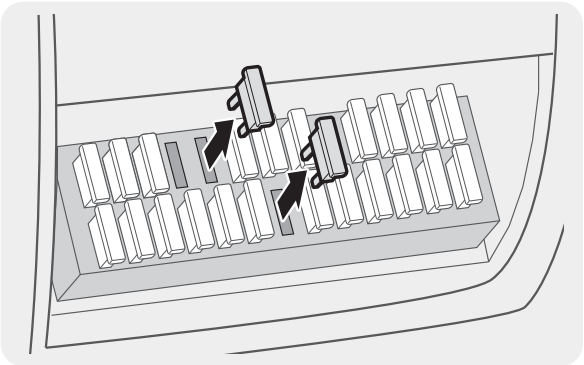

Open the fuse box, find the continuous power terminal (which supplies power when the vehicle is off) and the ACC terminal (which supplies power when the ignition status is "ACC ON") by using an electrical tester, and detach the fuses from the terminals.

3

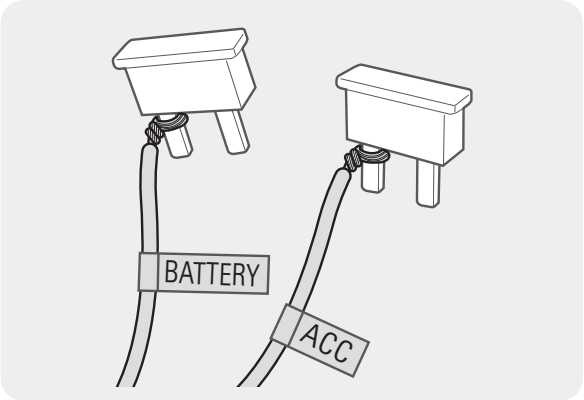

Connect the BATTERY wire to a fuse leg of the continuous power terminal and connect the ACC wire to a fuse leg of the normal (ACC) terminal.

4 Check the fuse panel's input and output contact points by using an electrical tester.

5 Place the fuses back into their locations on the fuse panel, connecting each fuse leg with the wire to the output contact point and taking care not to change the fuse position.

When you install the fuses on the fuse panel, the fuse legs for the BATTERY wire and the ACC wire must be connected to the output terminals respectively. If the fuse leg with the wire is connected to an input terminal, the product or vehicle may be damaged or electrical fire may result.

6

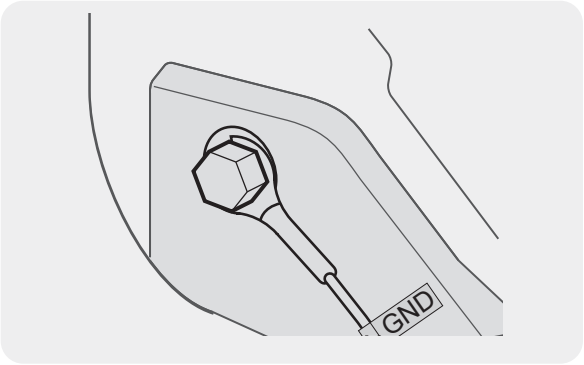

Connect the ground wire (the GND wire) to a bolt attached to a metallic part of the vehicle's body.

Normally, the metallic bolt that you can connect the ground wire to (the GND wire) is fitted nearby fuse box or the driver seat's door interior.

7

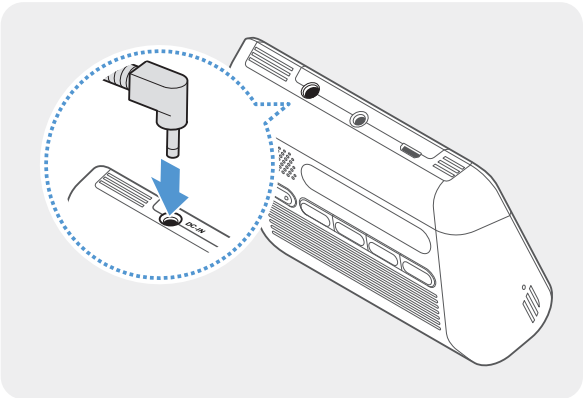

Connect the continuous power cable to the product's DC-IN power connector and start the engine to make sure the product operates normally.

Once the product is powered on, the LED indicator and the voice guidance are turned on.

8

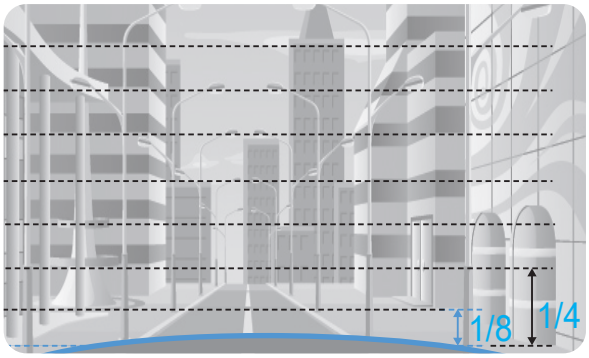

Connect the product to **THINKWARE DASH CAM LINK** on your smartphone and adjust the camera angle so that the hood of the vehicle covers 1/4 - 1/8 of the screen while viewing the live view screen, as shown in the image to the left.

For more information about connecting and using the THINKWARE mobile applications, refer to "4. Using the mobile viewer" on page 23.

Connecting the car charger

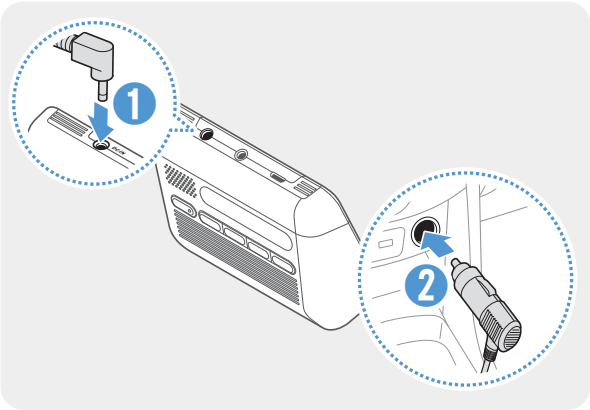

Connect the car charger to the product's DC-IN power port and insert the cigar jack into the vehicle's power socket.

The location and specifications of the power socket may differ by vehicle make and model.

- Use the authentic THINKWARE car charger. Use of third party power cables may damage the product and result in electrical fire or electrocution due to the voltage difference.
- Do not cut or modify the power cable yourself. Doing so may damage the product or the vehicle.
- For safe driving, arrange the cables to prevent the driver's vision from being obstructed or interfering with driving. For more information about arranging cables, visit www.thinkware.com.

2.2 Installing the rear camera

Refer to the following instructions to properly install the rear camera.

2.2.1 Selecting an installation location

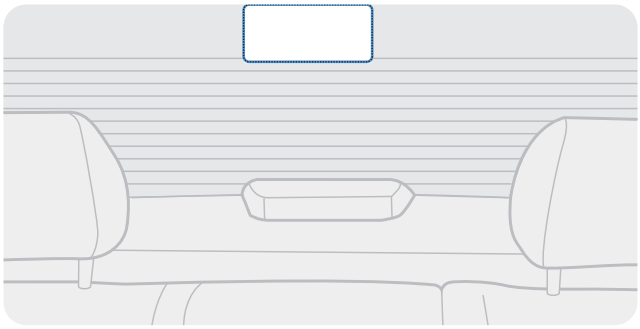

Select a location on the rear windshield where there is no defrost grid wire and the camera can record the entire rear view.

- For vehicles with a sunshade attached to the rear windshield, you must select a location where using the sunshade will not interfere with camera operation.
- The adhesive part of the rear camera should not touch the defrost grid.

2.2.2 Securing the rear camera

Refer to the following instructions to secure the product to the installation location.

1 After determining the installation location, wipe the installation surface of the windshield with a dry cloth.

Check the installation location before you secure the rear camera to the rear windshield. After securing the rear camera to the windshield, it is hard to remove the camera or change the installation location due to the strong adhesive.

2

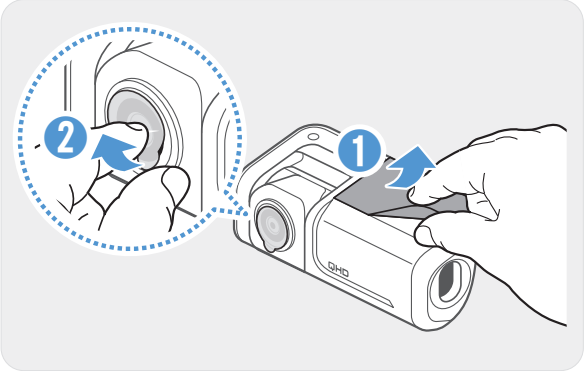

Remove the protective film from the adhesive mount and camera lens.

3

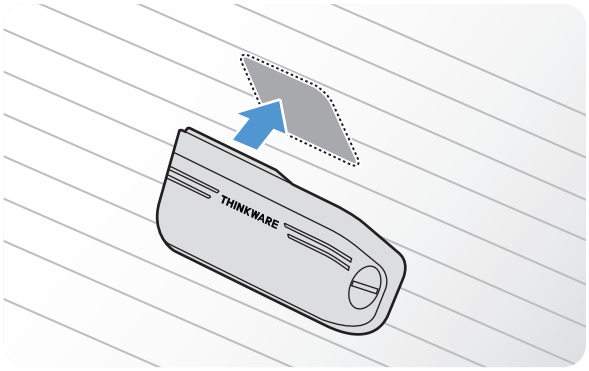

Attach the product with the THINKWARE logo facing indoors and press the adhesive tape firmly to secure the camera.

If the product is fixed in reverse, the rear view will be recorded upside down.

4

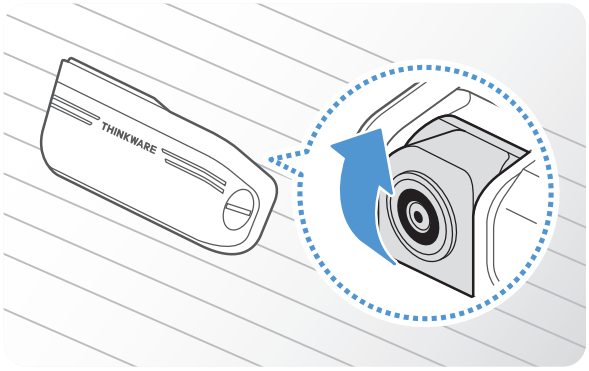

Adjust the camera's vertical angle.

2.2.3 Connecting the rear camera cable

Power off the product and connect the rear camera cable to the front camera (main unit).

When connecting the rear camera cable, check both ends of the cable.

1

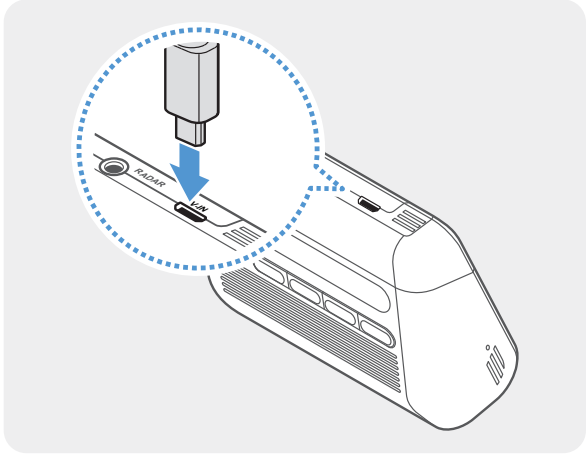

Connect one end of the rear camera cable (unmarked) to the front camera's V-IN port.

To prevent malfunctions, make sure to connect the appropriate cable to the front camera's V-IN port.

2

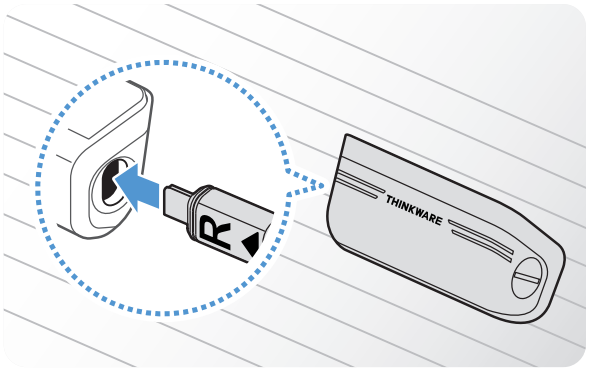

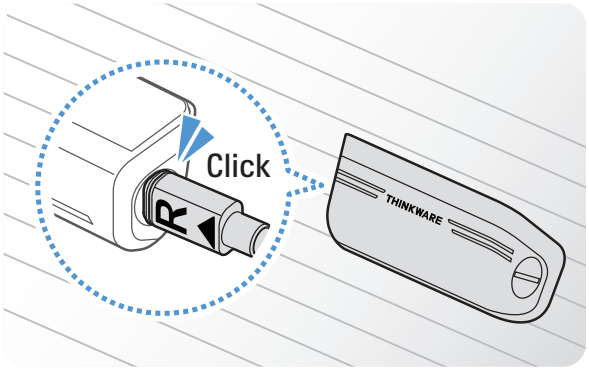

Connect the other end of the rear camera cable (marked **R**) to the corresponding port on the rear camera until you hear a **click**.

For safe driving, arrange the cables to prevent the driver's vision from being obstructed or interfering with driving.

3 Turn on the ACC or start the engine to check if the product is powered on. After the product is powered on, the voice guidance will be turned on.

The product is powered on when the ACC mode is turned on or when the engine starts.

4

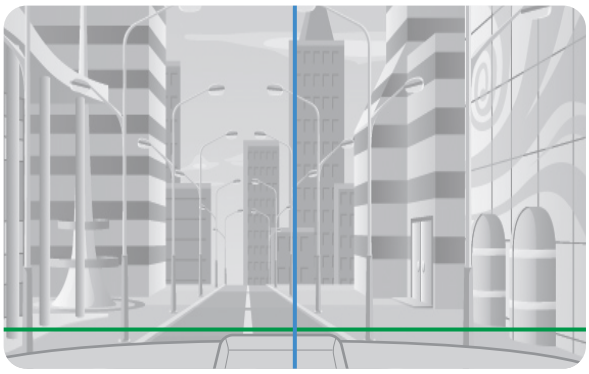

When attaching the rear camera, check the live view with the mobile viewer application. Launch **THINKWARE DASH CAM LINK** on your smartphone and tap **Live View** > to switch the screen to the rear view. Then, adjust the angle by checking the live view screen.

2.3 Installing the RADAR module (optional)

Refer to the following instructions to properly install the RADAR module. Install the RADAR module near the product, taking the module's cable length into account.

- When the RADAR module (optional) detects an object in the radar area, Energy Saving is switched off and the impact detection is set for 30 seconds. (If there is no impact detected, the product does not store the recording and switches back to Energy Saving.)
- If an object and impact are detected in the radar area, a video is recorded for 20 seconds and stored in the “parking_rec” folder. (The buzzer will sound.) When the recording ends, the product switches back to Energy Saving.

1

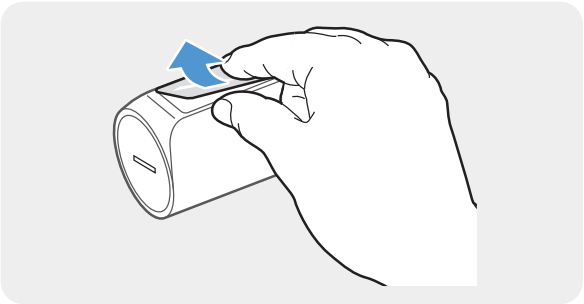

Remove the film on the back of the RADAR module.

2

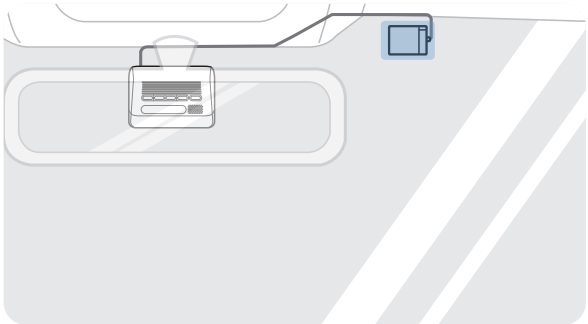

Attach the RADAR module’s adhesive surface to the upper part of the front windshield and press the adhesive part firmly to secure it.

Before installation, make sure the RADAR module’s cable length is sufficient and check the cable routing path.

3

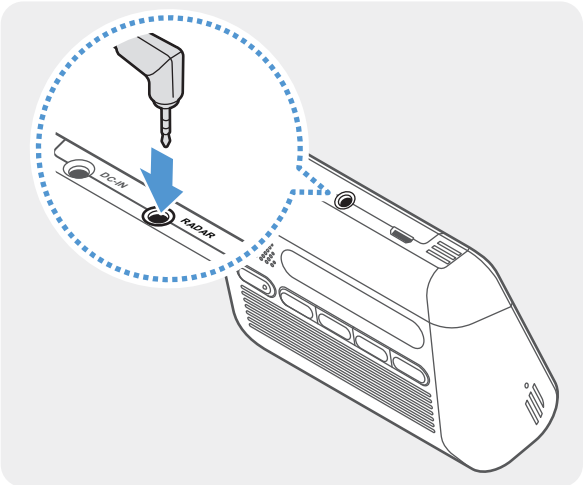

Connect the RADAR module to the product’s RADAR connector.

Check the RADAR connector location again before connecting the module. If you connect the RADAR module to the DC-IN power connector, the pins inside the port may be damaged.

4 Turn on the ACC or start the engine to check that the product is powered on. After the product is powered on, the REC LED and the voice guide are turned on.

3. Using recording features

3.1 Turning the product on or off

The product is turned on automatically and continuous recording starts when you turn on the ACC or start the engine.

Wait until the product is completely booted up after turning it on, and then begin operating the vehicle. The video recording does not begin until the product is completely turned on (booted up).

3.2 Learning about file storage locations

Videos are stored in the following folders according to their recording mode.

On the mobile viewer	Continuous	Continuous Incident	Manual Recording	Motion Detection	Parking Incident
In the memory card	cont_rec	evt_rec	manual_rec	motion_timelapse_rec	parking_rec

Play videos on Window/Mac computer or using **THINKWARE DASH CAM LINK**. If you play videos by inserting the memory card in devices such as a smartphone or a tablet PC, the video files may be lost.

A file name is composed of the recording start date and time, and the recording option.

YYYYMMDD HHMMSS

REC_20250122_182052_F.MP4
REC_20250122_182052_R.MP4

Recording conditions
- F: Front camera
- R: Rear camera

3.3 Using the continuous recording feature

Connect the power cable to the product's DC-IN power port and then turn on the vehicle's electrical accessories or start the engine. The status LED and the voice guide are turned on, and the continuous recording starts.

During continuous recording, the product operates as follows.

Mode	Operation description	Recording LED (REC)
Continuous recording	During driving, videos are recorded in 1 minute segments and stored in the "**cont_rec**" folder.	(light on)
Incident continuous recording*	When an impact to the vehicle is detected, a video is recorded for 20 seconds, from 10 seconds before the detection to 10 seconds after the detection, and stored in the "**evt_rec**" folder.	(flickers)

* When an impact to the vehicle is detected during continuous recording, incident continuous recording starts with a double beep sound.

- Wait until the product is completely booted up after turning it on, and then begin operating the vehicle. The video recording does not begin until the product is completely turned on (booted up).
- When incident continuous recording starts, a double "beep" sounds as a notification. This function saves you time when checking the status LED to know the operating status of the product.
- To enable recording, you must insert a memory card into the product.

3.4 Recording manually

You can record a scene you want to capture while driving and store it as a separate file.

To start manual recording, press the manual recording (**REC**) button. Then, manual recording will start with the voice guide. During manual recording, the product operates as follows.

Mode	Operation description	Recording LED (REC)
Manual recording	When you press the manual recording (**REC**) button, a video will be recorded for 1 minute, from 10 seconds before to 50 seconds after pressing the button, and stored in the "**manual_rec**" folder.	(flickers)

3.5 Using parking mode

When the product is connected to the vehicle via the hardwiring cable, the operating mode is switched to parking mode with the voice guide after the engine or electrical accessories are turned off.

- Parking mode operates only when the hardwiring cable is connected. The hardwiring cable must be professionally installed to the vehicle by a trained mechanic.
- To use all recording modes, you must insert a memory card into the product.
- Depending on the battery charging status of the vehicle, the duration of parking mode may differ. If you want to use parking mode for an extended period, check the battery level to prevent battery depletion.

If you do not want to use parking mode or you want to change the mode settings, from the mobile viewer, tap **Dash Cam Settings > Record Settings**.

Refer to the following table to set the **Parking Mode** options.

Option		Operation description	Recording LED (REC)
Motion Detection	No motion or impact detected	Monitors movement in the area or impacts to the vehicle. Video will be recorded only when motion or an impact is detected.	(flickers)
	Motion detected	When a moving objects is detected while parking, a video is recorded for 20 seconds, from 10 seconds before detection to 10 seconds after detection, and stored in the **"motion_timelapse_rec"** folder.	(flickers)
	Impact detected	When an impact is detected while parking, a video is recorded for 20 seconds, from the moment 10 seconds before detection to 10 seconds after detection, and stored in the **"parking_rec"** folder.	(flickers)
Time Lapse	No impact detected	A videos is recorded at a rate of 2 fps for 10 minutes, compressed into a 2-minute long file, and stored in the **"motion_timelapse_rec"** folder. Since the video file recorded with this option is small, you can record a long video.	(light on)
	Impact detected	When an impact is detected while parking, a video is recorded for 100 seconds at a rate of 2 fps, from the moment 50 seconds before detection to 50 seconds after detection, and stored in the **"parking_rec"** folder after being compressed into a 20-second long file. (The buzzer will sound.)	(flickers)
Energy Saving	No impact detected	Monitors impacts to the vehicle. Video will be recorded only when an impact is detected.	Off
	Impact detected	When an impact is detected while parking, a video is recorded for 20 seconds from within 1 second after detection and stored in the "**parking_rec**" folder. • When the RADAR module (optional) detects an object in the radar area, Energy Saving is switched off and the impact detection is set for 30 seconds. (If there is no impact detected, the product does not store the recording and switches back to Energy Saving.) • If an object and impact are detected in the radar area, a video is recorded for 20 seconds and stored in the “parking_rec” folder. (The buzzer will sound.) When the recording ends, the product switches back to Energy Saving.	(flickers)
OFF		The product is powered off when electric accessories and the engine are turned off.	Off

If parking mode settings are changed, the videos recorded with the previous settings will be deleted. To prevent data loss, back up all parking mode videos before changing parking mode settings.

You cannot use Motion Detection, Time Lapse, or Energy Saving at the same time.

3.6 Using the Super Night Vision

With the Super Night Vision feature, you can record videos that are much brighter than those recorded without this feature. This feature is enabled by real-time image signal processing (ISP) that improves the video brightness. This feature is available in the continuous, parking, and continuous+parking modes and is only available on the front camera.

〈When Super Night Vision is deactivated〉

〈When Super Night Vision is activated〉

1 From the mobile viewer, tap **Dash Cam Settings > Camera Settings**.

2 From **Super Night Vision**, select the desired recording mode to use the Super Night Vision feature. The new setting is applied automatically.

3.7 Using the HDR(High Dynamic Range)

HDR is an image processing technique for enhancing the realism of high-contrast subjects. Two 60 FPS videos taken with long and short shutter speeds are optimized using Thinkware's proprietary IDS (Intelligent Dual Sensing) tuning technology, and a compression codec is then applied to deliver a 30 FPS video that closely approximates reality.

1 From the mobile viewer, tap **Dash Cam Settings > Camera Settings**.

2 From **HDR**, select **Enabled** or **Disabled** for the HDR feature.

4. Using the mobile viewer

You can view and manage recorded videos and configure various product features on your smartphone.

> One of the following environments is required to use **THINKWARE DASH CAM LINK** application:
> • Android 9.0 or higher
> • iOS 15 or higher

4.1 Connect the product to a smartphone

1 On your smartphone, open the Google Play Store or Apple App Store and download and install **THINKWARE DASH CAM LINK**.

2 Run **THINKWARE DASH CAM LINK**.

3 Tap **Dash cam connection is required.** at the bottom of the screen and follow the on-screen instructions to connect the product to a smartphone.

4.2 Viewing the mobile viewer screen layout

The following is the screen layout for the mobile viewer.

5. Using the PC viewer

You can view and manage the recorded videos and configure various product features on your PC.

5.1 System requirements

The following are the system requirements for running the PC viewer.

- Processor: Intel Core i5, or higher
- Memory: 4 GB or more
- Operating system: Windows 7 or later (64-bit is recommended), Mac OS X 10.10 or later
- Other: DirectX 9.0 or higher / Microsoft Explorer version 7.0 or higher

The PC viewer will not operate properly on PC systems running an operating system other than those listed in the system requirements.

5.2 Learning about the PC viewer

5.2.1 Downloading the PC viewer

You can download the latest PC viewer software from the THINKWARE website.

1. On your PC, open a web browser and go to https://www.thinkware.com/Support/Download.
2. Select a model name.
3. Click **Select OS** to select your OS, then click **DOWNLOAD**.

- The new PC viewer for Mac can be downloaded from the Apple App Store without visiting the THINKWARE website. Search for "Thinkware Dashcam Viewer" in the Apple App Store.
- If you are using Mac OS X 10.13 or earlier, you can only download the PC viewer from the website.

5.2.2 Installing the PC viewer

The PC viewer installation file (setup.exe) is stored in the root folder of the memory card that is provided with the product. Follow the instructions to install the PC viewer on your PC.

1. Insert the memory card into a memory card reader connected to your PC.
2. Move the installation file to the desktop, run it, and complete the installation according to the instructions given in the installation wizard.
   After the installation is complete, there will be a shortcut icon to Thinkware Dashcam Viewer.

5.2.3 PC viewer screen layout

The following provides brief information about the PC viewer's screen layout.

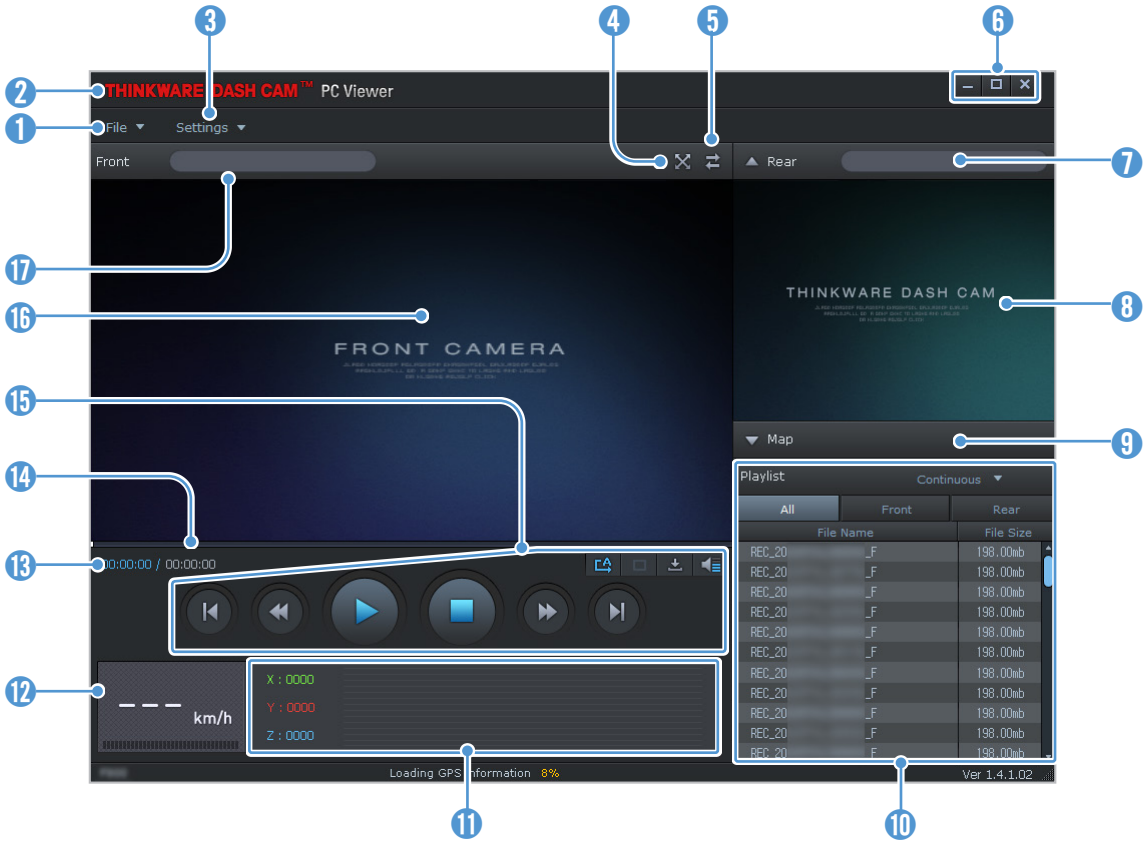

Number	Description
1	Open a file, or save a video with a different name.
2	Visit the THINKWARE website.
3	View or configure the dashcam settings, and set the language for the PC viewer.
4	Display the current video in full screen. Tap the Back ( ) button to return to the previous screen.
5	Switch between the front and rear videos.
6	Minimize, expand, or close the software.
7	Displays the rear camera video file name.
8	Displays the recorded rear camera video.
9	Display the map screen.
10	Displays the playlist.
11	Indicates the G sensor value at the time of recording.
12	Indicates the vehicle's driving speed at the time of recording.
13	Displays the current and total running time of the current video.
14	Displays the progress of video playback.
15	Play or control a video.
16	Displays the recorded front camera video.
17	Displays the front camera video file name.

5.2.4 Playing recorded videos on the PC viewer

Follow the instructions to play recorded videos.

1 Turn off the product and remove the memory card.

2 Insert the memory card into a memory card reader connected to your PC.

3 Double-click the shortcut to the PC viewer ( ) to open the program. The video files in the memory card will be automatically added to the playlist in the bottom-right corner of the PC viewer screen. The playlist section layout is as follows.

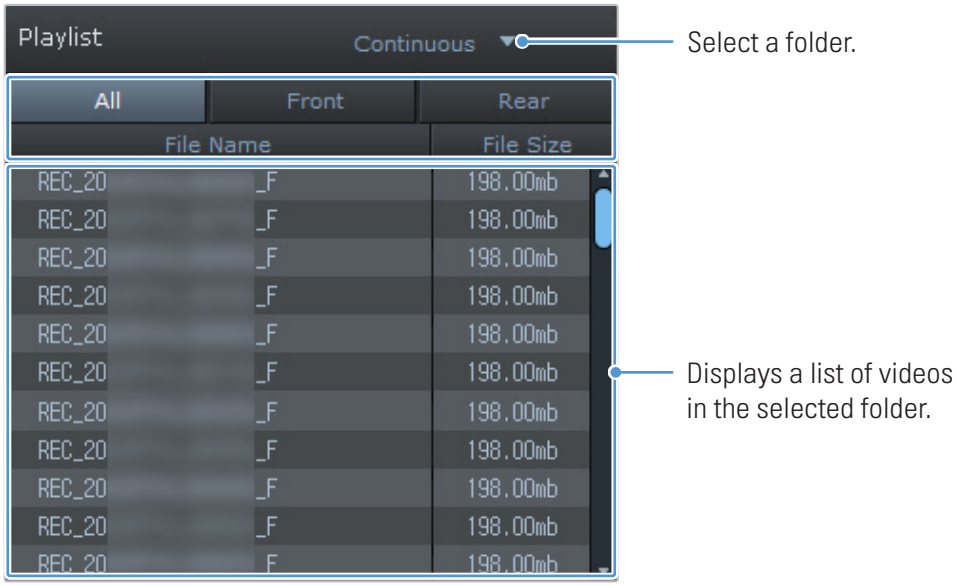

4 Double-click a video file after selecting a video folder, or click the Play (▶) button after selecting a video file. The selected video file will be played.

If the video files on the memory card are not automatically added to the playlist when you run the PC viewer, click **File▼ > Open**, select the removable storage device for the memory card, and click **Confirm**.

6. Settings

You can set the product features according to your needs and preferences using the mobile viewer or the PC viewer. The following procedures are based on the mobile viewer.

The product will stop recording while configuring settings on the mobile viewer.

6.1 Managing the memory card

From the mobile viewer, tap **Dash Cam settings > Memory Card Settings** to manage the memory card settings.

Options	Description
Memory Partition	Select from **Continuous Priority/Incident Priority/Parking Priority/Manual Priority/ Driving Recording Only** for the memory partition type.
Formatting Memory Card	In **Formatting Memory Card**, tap **Format > OK** to proceed with formatting the memory card.
Overwrite Videos	Select the desired modes to allow video overwriting.

6.2 Setting the Camera

From the mobile viewer, tap **Dash Cam settings > Camera Settings** to adjust the camera settings.

Options	Description
Resolution	Select from **4K 30fps + QHD 30fps/QHD 45fps + QHD 30fps** for the desired resolution.
Brightness-front	Select from **Dark/Mid/Bright** for the brightness of the front camera.
Brightness-rear	Select from **Dark/Mid/Bright** for the brightness of the rear camera.
Rotate Rear Camera	Select from **Enabled/Disabled**.
Super Night Vision	Select from **Disabled/Continuous Mode/Parking Mode/Continuous+Parking** for the Super Night Vision feature.
HDR	Select from **Enabled/Disabled** for the HDR feature.

6.3 Setting recording features

From the mobile viewer, tap **Dash Cam settings > Record Settings** to manage the recording features settings.

Options	Description
Continuous Mode Incident Recording Sensitivity	Select from **Disabled/Lowest/Low/Mid/High** for the sensitivity.
Voice Recording	Select from **Enabled/Disabled** for the voice recording.
Parking Mode	Select from **Disabled/Motion Detection/Time Lapse/Energy Saving** for the parking mode.
Smart Parking Recording	Select from **Enabled/Disabled**.
RADAR	Select from **Enabled/Disabled**.
Impact Sensitivity in Parking Mode	Select one of the five parking mode sensitivity levels.
Motion Detection Sensitivity	Select one of the five motion detection sensitivity levels.
Off Timer	Select the desired record time. To turn off the record timer, select **Disabled**.
Battery Protection	Select from **Enabled/Disabled** for the battery protection.
Vehicle Type	Select from **Regular car/Hybrid car/Electric car** for the vehicle type.
Battery cutoff voltage	Select from **12V (11.6~13.2V)/24V (23.2-24.6)** for the battery cutoff voltage.
Wintertime Battery Protection	Select the month(s) to apply the battery protection feature.

- To use parking mode, you must install the hardwiring cable. If continuous power is not supplied to the product, the product will stop recording when the vehicle engine is turned off.
- The vehicle battery will not be charged while the vehicle is parked. If you record in parking mode for an extended period, the vehicle's battery may be depleted and you may not be able to start the vehicle.

- For more information about parking mode, refer to "3.5 Using parking mode" on page 20.
- The battery cutoff voltage can be set only when the **Battery Protection** setting is set to **Enabled**.
- If the off voltage value is too low, the product may consume the battery completely depending on the conditions like the vehicle type or temperature.

6.4 Setting road safety features

From the mobile viewer, tap **Dash Cam settings > Road Safety Settings** to manage the road safety features settings.

Options	Description
Safety Cameras	Select from **Enabled/Disabled** for the safety cameras.
Mobile Zone Alert	Select from **Enabled/Disabled** for the mobile zone alert.

6.5 Configuring the system settings

From the mobile viewer, tap **Dash Cam Settings > System Settings** to configure the hardware system settings.

Options	Description
Language	Select the desired language.
Volume	Select the desired volume level for each feature (**Safety Cameras/System**).
Security LED	Select the desired mode to use the security LED.
Rear Camera LED	Select from **Enabled/Disabled** for rear camera LED.
Time Zone	Select the date and time.
Daylight Saving	Select from **Enabled/Disabled** for the daylight saving.
Speed Unit	Select from **km/h/mph** for the speed unit.
Speed Stamp	Select from **Enabled/Disabled** for the speed stamp.
Wi-Fi Frequency Band	Select from **2.4GHz/5GHz** for the Wi-Fi frequency.

If you select **0** for the volume level, the voice guidance will be disabled.

7. Upgrading the firmware

A firmware upgrade is provided to enhance the product's features, operation or to increase stability. For optimal operation of the product, ensure that you keep the firmware up to date.

Follow the instructions to upgrade the firmware.

1. On your PC, open a web browser and go to https://www.thinkware.com/Support/Download.
2. Select the product and download the latest firmware upgrade file.
3. Unzip the downloaded file.
4. Disconnect power to the product and remove the memory card.
5. Open the memory card on a PC and copy the firmware upgrade file to the root folder of the memory card.
6. While the power is disconnected from the product, insert the memory card into the memory card slot on the product.
7. Connect the power cable to the product, and then turn on the power (ACC ON) or start the engine to turn on the product. The firmware upgrade starts automatically, and the system will restart once the firmware update is completed.

   Do not disconnect the power or remove the memory card from the product during the upgrade. Doing so may cause serious damage to the product, or to the data stored in the memory card.

You can also update the firmware from the mobile viewer and the PC viewer. A notification pop-up will be displayed on the PC Viewer screen when a new update file becomes available.

8. Troubleshooting

The following table lists the problems users may encounter while using the product and measures to resolve them. If the problem persists after taking the measures provided in the table, contact the customer service center.

Problems	Solution
Cannot power on the product	• Make sure the power cable (the hardwiring cable or the car charger) is connected to the vehicle and the product properly. • Check the vehicle's battery level.
The voice guide and/or buzzer do not sound.	Check if the volume is set to the minimum.
The video is unclear or hardly visible.	• Ensure that the protective film on the camera lens has been removed. The video may look unclear if the protective film is still on the camera lens. • Check the installation location of the front camera, turn on the product, and then adjust the camera's viewing angle.
The memory card cannot be recognized.	• Ensure that the memory card has been inserted in the correct direction. Before inserting the memory card, check the metal contacts on the memory card and the insertion direction marked on the product. • Turn off the power, remove the memory card, and then check to ensure that the contacts in the memory card slot are not damaged. • Ensure that the memory card is an authentic product distributed by THINKWARE. THINKWARE does not guarantee compatibility and normal operation of third-party memory cards.
The recorded video cannot be played on a PC.	The recorded videos are stored as MP4 video files. Ensure that the video player installed on your PC supports the playback of MP4 video files.
GPS signal cannot be received.	The GPS signal may not be received in out-of-service areas, or if the product is located between tall buildings. Also, GPS signal reception may not be available during storms or heavy rain. Try again on a clear day at a location that is known to have a good GPS reception. It may take up to 5 minutes until GPS reception is established.

Before contacting a service center

Please back up all important data stored in the memory card. The data in the memory card may be deleted during repair. Every product requested for repair is regarded as a device that has had its data backed up. The customer service center does not back up your data. THINKWARE is not responsible for any loss, such as data loss.

9. Specifications

To see the product specifications, refer to the following table.

Item	Specification	Remarks
Model name	ARC700	Rear Camera: BCQH-20E
Dimensions	Front : 100.3 x 71.9 x 30 mm	Rear Camera: BCQH-20E: 79.3 x 36.9 x 31.9 mm
Memory	microSD memory card	64 GB, 128 GB, 256 GB
Camera sensor	8.29M pixels, 1/2.8"	
Angle of view (Lens)	Approximately 135.6° (diagonally)	
Video	Front: 4K UHD (3840 x 2160) @30fps + QHD (2560 x 1440) @30fps / QHD (2560 x 1440) @45fps + QHD (2560 x 1440) @30fps / H.264 / MP4 / AAC	Rear: QHD (2560 x 1440) @60fps + QHD (2560 x 1440) @30fps / H.264 / MP4 / AAC
Recording mode	Continuous Rec, Incident Rec, Manual Rec, Parking Rec (parking mode)	
Features	Super Night Vision (front only), HDR, Smart Parking Recording, Battery Protection, Thermal Protection	
Acceleration sensor	3-axis acceleration sensor	5 levels for sensitivity adjustment available
GPS	Embedded GPS	
GNSS	GPS/GLONASS	
Bluetooth	Standard	Bluetooth v2.1+EDR/4.0/4.2
	Frequency	2.4GHz – 2.4835GHz
Wi-Fi	Standard	2.4G / 5G (IEEE 802.11a/b/g/n/ac)
	Frequency	2.4GHz – 2.4835GHz / 5.15GHz – 5.85GHz
Power input	DC 12 / 24 V ⎓ supported	Rear Camera (BCQH-20E): DC 5 V ⎓ supported
Power consumption	2ch: 6.7 W / 1ch: 4.9 W (mean)	Except for the fully charged supercapacitor / GPS Actual power consumption may vary depending on the usage conditions and environment.
Auxiliary power unit	Super capacitor	
LED indicator	Security LED, REC LED, GPS LED, Connection LED	
Alarm	Built-in speakers	Voice guide (buzzer sounds)
Operating temperature	14 – 140°F / -10 – 60°C	
Storage temperature	-4 – 158°F / -20 – 70°C	

FCC Compliance Statement

This device complies with part 15 of the FCC rules. Operation is subject to the following two conditions: (1) This device may not cause harmful interference, and (2) this device must accept any interference received, including interference that may cause undesired operation.

This equipment has been tested and found to comply with the limits for a Class B digital device, pursuant to part 15 of the FCC Rules. These limits are designed to provide reasonable protection against harmful interference in a residential installation. This equipment generates, uses and can radiate radio frequency energy and, if not installed and used in accordance with the instructions, may cause harmful interference to radio communications. However, there is no guarantee that interference will not occur in a particular installation. If this equipment does cause harmful interference to radio or television reception, which can be determined by turning the equipment off and on, the user is encouraged to correct the interference by one of the following measures:

- Reorient or relocate the receiving antenna.
- Increase the separation between the equipment and receiver.
- Connect the equipment into an outlet on a circuit different from which the receiver is connected.
- Consult the dealer or an experienced radio/TV technician for help.

FCC Caution

Any changes or modifications to the equipment not expressly approved by the party responsible for compliance could void your authority to operate the equipment.

This transmitter must not be co-located or operating in conjunction with any other antenna or transmitter.

IEEE 802.11b or 802.11g operation of this product in the USA is firmware-limited to channels 1 through 11.

FCC Radiation Exposure Statement

This equipment complies with FCC radiation exposure limits set forth for an uncontrolled environment. This equipment should be installed and operated with minimum distance 20 cm between the radiator and your body.

FCC ID: 2ADTG-ARC700

Responsible Party – U.S. Contact Information

- Company Name : Thinkware Systems USA Inc.
- Company Address : 18021, Sky Park Circle, STE J2, Irvine, CA, 92614, USA
- E-mail : support@thinkware.com

Industry Canada Statement

This device complies with Industry Canada license-exempt RSS standard(s). Operation is subject to the following two conditions: (1) this device may not cause interference, and (2) this device must accept any interference, including interference that may cause undesired operation of the device.

Ce dispositif est conforme à la norme CNR-247 d'Industrie Canada applicable aux appareils radio exempts de licence. Son fonctionnement est sujet aux deux conditions suivantes: (1) le dispositif ne doit pas produire de brouillage préjudiciable, et (2) ce dispositif doit accepter tout brouillage reçu, y compris un brouillage susceptible de provoquer un fonctionnement indésirable.

Industry Canada Radiation Exposure Statement

This equipment complies with IC radiation exposure limits set forth for an uncontrolled environment. This equipment should be installed and operated with minimum distance 20 cm between the radiator & your body.

Déclaration d'exposition aux radiations

Cet équipement est conforme aux limites d'exposition aux rayonnements IC établies pour un environnement non con trôlé. Cet équipement doit être installé et utilisé avec un minimum de 20 cm de distance entre la source de rayonnement et votre corps.

"This Class (B) digital apparatus complies with Canadian ICES-003."

"Cet appareil numérique de la classe (B) est conforme à la norme NMB-003 du Canada."

IC: 12594A-ARC700

Canadian Representative

- Company Name: Mondo System Technology Canada Inc.
- Contact Name: Youngtae Song
- Company Address: 210-1580 BRIGANTINE DRIVE COQUITLAM BC, V3K7C1, CANADA
- ISED Company Number: 9737B
- Telephone: 604.544.2741
- Email: andy.song@mondosystem.com

- Contains FCC ID : 2AATL-6221ASRC
- Contains IC Number : 12425A-6221ASRC

http://www.thinkware.com

Ver. 1.0 (Mar. 2025)