FOR CAR USE ONLY/ POUR APPLICATION AUTOMOBILE UNIQUEMENT/ NUR FÜR AUTOMOBIL GEBRAUCH/ PARA USO EN AUTOMÓVILES/ SOLO PER L'UTILIZZO IN AUTOMOBILE/ ТОЛЬКО ДЛЯ ИСПОЛЬЗОВАНИЯ В АВТОМОБИЛЯХ

ALPINE®

Advanced Dash Cam

DVR-C320R
DVR-C320S
RCV-C320

- OWNER'S MANUAL
  Please read before using this equipment.
- MODE D'EMPLOI
  Veuillez lire avant d'utiliser cet appareil.
- BEDIENUNGSANLEITUNG
  Lesen Sie diese Bedienungsanleitung bitte vor Gebrauch des Gerätes.
- MANUAL DE OPERACIÓN
  Léalo antes de utilizar este equipo.
- ISTRUZIONI PER L'USO
  Si prega di leggere prima di utilizzare il attrezzatura.
- РУКОВОДСТВО ПО ЭКСПЛУАТАЦИИ
  Прочтите настоящее руководство перед началом использования оборудования.

FCC Statement

This device complies with Part 15 of the FCC Rules. Operation is subject to the following two conditions: (1) this device may not cause harmful interference, and (2) this device must accept any interference received, including interference that may cause undesired operation.

This equipment has been tested and found to comply with the limits for a Class B digital device, pursuant to Part 15 of the FCC Rules. These limits are designed to provide reasonable protection against harmful interference in a residential installation. This equipment generates, uses and can radiate radio frequency energy and, if not installed and used in accordance with the instructions, may cause harmful interference to radio communications. However, there is no guarantee that interference will not occur in a particular installation. If this equipment does cause harmful interference to radio or television reception, which can be determined by turning the equipment off and on, the user is encouraged to try to correct the interference by one or more of the following measures:

- Reorient or relocate the receiving antenna.
- Increase the separation between the equipment and receiver.
- Connect the equipment to an outlet on a circuit different from that to which the receiver is connected.
- Consult the dealer or an experienced radio/TV technician for help.
- This appliance and its antenna must not be co-located or operation in conjunction with any other antenna or transmitter.
- A minimum separation distance of 20cm must be maintained between the antenna and the person for this appliance to satisfy the RF exposure requirements.

FCC CAUTION: Any changes or modifications to the equipment not expressly approved by the party responsible for compliance could void your authority to operate the equipment.

FCC ID: 2ADTG-DVRC320R

Information to user : RSS-247

This equipment complies with IC radiation exposure limits set forth for an uncontrolled environment. This equipment should be installed and operated with minimum distance 20 cm between the radiator & your body.

This device contains licence-exempt transmitter(s)/receiver(s) that comply with Innovation, Science and Economic Development Canada's licence-exempt RSS(s).

Please be cautioned the changes or modifications not expressly approved by the party responsible for compliance could void the user's authority to operate the equipment.

Notice: Operation is subject to the following two conditions : (1) this device may not cause interference, and (2) this device must accept any interference, including interference that may cause undesired operation of the device.

This Class B digital apparatus complies with Canadian ICES-003.

IC: 12594A-DVRC320R

Avant d'utiliser le produit

À propos de ce produit

Ce produit enregistre des vidéos pendant le fonctionnement du véhicule. Utilisez cet appareil seulement à des fins de documentation pour les enquêtes d'incidents ou d'accidents de la route. Il n'existe aucune garantie que ce produit enregistrera ou effectuera le traitement des données en nuage pour tous les événements. Le produit pourrait ne pas enregistrer les accidents ayant un impact insuffisant pour activer le capteur d'impact, ou encore les accidents ayant un très grand impact causant une déviation de la tension électrique de la batterie du véhicule.

L'enregistrement vidéo commence seulement à partir du moment où le produit est entièrement en fonction (activé). Pour vous assurer que tous les événements concernant le véhicule sont enregistrés, attendez que le produit ait terminé de s'activer après l'avoir allumé, puis commencez à conduire.

THINKWARE n'est aucunement responsable de toute perte résultant d'un accident ni de fournir du soutien, quel qu'il soit, en lien avec les conséquences d'un accident.

Selon la configuration ou les conditions de fonctionnement du véhicule, par exemple l'installation de dispositifs de verrouillage à distance des portes ou les réglages de l'unité de contrôle électronique ou du système de surveillance de la pression des pneus, certaines fonctions du produit pourraient ne pas être prises en charge et différentes versions du logiciel peuvent avoir des effets sur le rendement ou les fonctions du produit.

À propos du guide de l'utilisateur

L'information présentée dans ce guide est sujette à modification quand le fabricant met à jour sa politique de service.

Ce guide de l'utilisateur est conçu pour les modèles THINKWARE DVR−C320R seulement et peut comporter des erreurs techniques ou de rédaction ou des omissions.

Droits d'auteur

Tous les droits portant sur le contenu et les cartes du présent guide sont réservés par THINKWARE et protégés selon les lois sur la propriété intellectuelle. Toute copie, modification, publication ou distribution du présent guide sans une autorisation écrite de THINKWARE est interdite et sujette à des poursuites criminelles.

Marques de commerce déposées

THINKWARE DVR−C320R est une marque déposée de THINKWARE.

Les autres logos de produits et noms de services apparaissant dans le présent guide sont des marques de commerce de leurs entreprises respectives.

Énoncé FCC

Cet appareil est conforme à la partie 15 des Règles de la FCC. Son utilisation est assujettie aux deux conditions suivantes : (1) Cet appareil ne doit causer aucune interférence nuisible et (2) cet appareil doit accepter toutes les interférences reçues, y compris celles qui pourraient provoquer un fonctionnement non souhaitable.

Cet équipement a été testé et déclaré conforme aux limites pour appareils numériques de classe B, selon la section 15 des Règles de la FCC. Ces limites sont destinées à assurer une protection raisonnable contre les interférences nuisibles dans une installation résidentielle. Cet équipement génère, utilise et émet de l'énergie de fréquences radio et peut, en cas d'installation ou d'utilisation non conforme aux instructions, engendrer des interférences nuisibles pour les communications radio. Toutefois, il n'existe aucune garantie qu'une installation particulière sera à l'abri des interférences. Si cet équipement cause des interférences nuisibles à la réception radiophonique ou télévisuelle, ce qui peut être vérifié en mettant l'équipement hors, puis sous tension, l'utilisateur peut tenter de résoudre le problème de l'une des façons suivantes :

- Réorienter ou déplacer l'antenne de réception.
- Augmenter la distance entre l'équipement et le récepteur.
- Brancher l'équipement sur un circuit électrique différent de celui où le récepteur est branché.
- Consulter le fournisseur ou un technicien expérimenté dans le domaine de la radio ou de la télévision.
- Cet appareil et son antenne ne doivent pas être placés à proximité de toute autre antenne ou de tout autre émetteur, ni être utilisés conjointement avec ceux-ci.
- Une distance de séparation minimale de 20 cm doit être maintenue entre l'antenne de cet appareil et l'utilisateur pour satisfaire aux exigences d'exposition aux RF.

MISE EN GARDE DE LA FCC : Tout changement ou toute modification à l'équipement qui n'a pas fait l'objet d'une autorisation expresse par la partie responsable d'assurer sa conformité pourrait annuler votre droit à utiliser l'équipement.

Code FCC : 2ADTG-DVRC320R

Information pour l'utilisateur : CNR-247

Cet équipement est conforme avec les limites d'exposition aux radiations établies par IC pour un environnement non contrôlé. Cet équipement doit être installé et utilisé à une distance minimale de 20 cm entre le radiateur et votre corps.

Le présent appareil est conforme aux RSS (RSS) d'Innovation, Sciences et Développement économique Canada applicables aux appareils radio exempts de licence.

Soyez avisés que tout changement ou toute modification à l'équipement qui n'a pas fait l'objet d'une autorisation expresse par la partie responsable d'assurer sa conformité pourrait annuler le droit de l'utilisateur à utiliser l'équipement.

Avis : L'exploitation est autorisée aux deux conditions suivantes : (1) l'appareil ne doit pas produire de brouillage, et (2) l'utilisateur de l'appareil doit accepter tout brouillage radioélectrique subi, même si le brouillage est susceptible d'en compromettre le fonctionnement.

Cet appareil numérique de classe B est conforme à la norme canadienne NMB-003.

ISDEC : 12594A-DVRC320R

Contents

Operating Instructions 4

1. Product overview 8

1.1 Included items 8
- 1.1.1 DVR-C320R (2 camera) 8
- 1.1.2 DVR-C320S (1 camera) 9
- 1.1.3 RVC-C320 (rear view only) 9

1.2 Part names 10
- 1.2.1 Front camera (main unit) - front view 10
- 1.2.2 Front camera (main unit) - rear view 11
- 1.2.3 Rear camera (RVC-C320) 11

1.3 Removing and inserting the memory card 12

1.4 Overviewing connection diagram 13
- 1.4.1 2 Camera connection diagram (DVR-C320R) 13
- 1.4.2 1 Camera connection diagram (DVR-C320S) 14

2. Installing the product 15

2.1 Installing the front camera (main unit) 15
- 2.1.1 Selecting an installation location 15
- 2.1.2 Securing the product 15

2.2 Installing the rear camera 16
- 2.2.1 Selecting an installation location 16
- 2.2.2 Securing the rear camera 17
- 2.2.3 Connecting the rear camera cable 18

3. Using recording features 19

3.1 Turning the product on or off 19

3.2 Learning about file storage locations 19

3.3 Using the continuous recording feature 20

3.4 Recording manually 20

3.5 Using parking mode 21

3.6 Using the Super Night Vision 2.0 22

3.7 Using the road safety features 22

4. Using the mobile viewer 23

4.1 Connect the product to a smartphone 23

4.2 Viewing the mobile viewer screen layout 23

5. Using the PC viewer 24

5.1 System requirements 24

5.2 Learning about the PC viewer 24
- 5.2.1 Installing the PC viewer 24
- 5.2.2 PC viewer screen layout (for Windows) 25
- 5.2.3 Playing recorded videos on the PC viewer (for Windows) 26
- 5.2.4 PC viewer screen layout (for Mac) 27
- 5.2.5 Playing recorded videos on the PC viewer (for Mac) 28

6. Settings 29

6.1 Managing the memory card 29

6.2 Setting the Camera 29

6.3 Setting recording features 30

6.4 Setting road safety features 31

6.5 Configuring the system settings 31

7. Accessing the product information 32

7.1 Viewing product information 32

7.2 Accessing and configuring the GPS 32

8. Upgrading the firmware 33

9. Troubleshooting 34

10. Specifications 35

10.1 DVR-C320R (2 camera) 35

10.2 DVR-C320S (1 camera) 36

Operating Instructions

Points to Observe for Safe Usage

Read this manual carefully before using this disc and the system components. They contain instructions on how to use this product in a safe and effective manner. Alpine cannot be responsible for problems resulting from failure to observe the instructions in this manual.

This manual uses various pictorial displays to show you how to use this product safely and to alert you to potential dangers resulting from improper connections and operation. Following are the meanings of these pictorial displays. It is important to fully understand the meanings of these pictorial displays in order to use this manual and the system properly.

Safety symbols in this guide

"Warning" - This symbol means Important Instructions. Failure to heed them can result in serious injury or death.

"Caution" - This symbol means Important Instructions. Failure to heed them can result in Injury or material property damage.

"Note" - This symbol means useful information that helps users better utilize the product's features.

Safety information for proper use

Driving and product operation

- **KEEP THE VOLUME AT A LEVEL WHERE YOU CAN STILL HEAR OUTSIDE NOISES WHILE DRIVING.** Excessive volume levels that obscure sounds such as emergency vehicle sirens or road warning signals (train crossings, etc.) can be dangerous and may result in an accident. LISTENING AT LOUD VOLUME LEVELS IN A CAR MAY ALSO CAUSE HEARING DAMAGE.
- **MINIMIZE DISPLAY VIEWING WHILE DRIVING.** Viewing the display may distract the driver from looking ahead of the vehicle and cause an accident.
- **OPERATION OF THE SYSTEM WHILE DRIVING IS DANGEROUS.** Users should stop vehicle before operating the software.
- **THIS SOFTWARE IS DESIGNED FOR USE EXCLUSIVELY IN THE UNIT.** It cannot and may not be used in conjunction with other hardware.

Power supply and product installation

- **INSTALL THE PRODUCT CORRECTLY SO THAT THE DRIVER CANNOT WATCH TV/VIDEO UNLESS THE VEHICLE IS STOPPED AND THE EMERGENCY BRAKE IS APPLIED.** It is dangerous for the driver to watch TV/Video while driving a vehicle. Installing this product incorrectly enables the driver to watch TV/Video while driving. This may cause a distraction, preventing the driver from looking ahead, thus causing an accident. The driver or other people could be severely injured.
- **DO NOT WATCH VIDEO WHILE DRIVING.** Watching the video may distract the driver from looking ahead of the vehicle and cause an accident.
- **DO NOT DISASSEMBLE OR ALTER.** Doing so may result in an accident, fire or electric shock.
- **USE ONLY IN CARS WITH A 12 VOLT NEGATIVE GROUND.** (Check with your dealer if you are not sure.) Failure to do so may result in fire, etc.
- **USE THE CORRET AMPERE RATING WHEN REPLACING FUSES.** Failure to do so may result in fire or electric shock.
- **DO NOT BLOCK VENTS OR RADIATOR PANELS.** Doing so may cause heat to build up inside and may result in fire.
- **USE THIS PRODUCT FOR MOBILE 12V APPLICATIONS.** Use for other than its designed application may result in fire, electric shock or other injury.
- **MAKE THE CORRECT CONNECTIONS.** Failure to make the proper connections may result in fire or product damage.
- **BEFORE WIRING, DISCONNECT THE CABLE FROM THE NEGATIVE BATTERY TERMINAL.** Failure to do so may result in electric shock or injury due to electrical shorts.
- **DO NOT ALLOW CABLES TO BECOME ENTANGLED IN SURROUNDING OBJECTS.** Arrange wiring and cables in compliance with the manual to prevent obstructions when driving. Cables or wiring that obstruct or hang up on places such as the steering wheel, gear lever, brake pedals, etc. can be extremely hazardous.
- **DO NOT SPLICE INTO ELECTRICAL CABLES.** Never cut away cable insulation to supply power to other equipment. Doing so will exceed the current carrying capacity of the wire and result in fire or electric shock.
- **DO NOT DAMAGE PIPE OR WIRING WHEN DRILLING HOLES.** When drilling holes in the chassis for installation, take precautions so as not to contact, damage or obstruct pipes, fuel lines, tanks or electrical wiring. Failure to take such precautions may result in fire.
- **DO NOT USE BOLTS OR NUTS IN THE BRAKE OR STEERING SYSTEMS TO MAKE GROUND CONNECTIONS.** Bolts or nuts used for the brake or steering systems (or any other safety-related system), or tanks should NEVER be used for installations or ground connections. Using such parts could disable control of the vehicle and cause fire etc.
- **DO NOT INSTALL IN LOCATIONS WHICH MIGHT HINDER VEHICLE OPERATION, SUCH AS THE STEERING WHEEL OR SHIFT LEVER.** Doing so may obstruct forward vision or hamper movement etc. and results in serious accident.
- **DO NOT OPERATE ANY FUNCTION THAT TAKES YOUR ATTENTION AWAY FROM SAFELY DRIVING YOUR VEHICLE.** Any function that requires your prolonged attention should only be performed after coming to a complete stop. Always stop the vehicle in a safe location before performing these functions. Failure to do so may result in an accident.

Children

KEEP SMALL OBJECTS SUCH AS SCREWS OUT OF THE REACH OF CHILDREN. Swallowing them may result in serious injury. If swallowed, consult a physician immediately.

Other information about the product

Product management and operation

- **HALT USE IMMEDIATELY IF A PROBLEM APPEARS.** Failure to do so may cause personal injury or damage to the product. Return it to your authorized Alpine dealer or the nearest Alpine Service Center for repairing.
- **HAVE THE WIRING AND INSTALLATION DONE BY EXPERTS.** The wiring and installation of this unit requires special technical skill and experience. To ensure safety, always contact the dealer where you purchased this product to have the work done.
- **USE SPECIFIED ACCESSORY PARTS AND INSTALL THEM SECURELY.** Be sure to use only the specified accessory parts. Use of other than designated parts may damage this unit internally or may not securely install the unit in place. This may cause parts to become loose resulting in hazards or product failure.
- **ARRANGE THE WIRING SO IT IS NOT CRIMPED OR PINCHED BY A SHARP METAL EDGE.** Route the cables and wiring away from moving parts (like the seat rails) or sharp or pointed edges. This will prevent crimping and damage to the wiring. If wiring passes through a hole in metal, use a rubber grommet to prevent the wire's insulation from being cut by the metal edge of the hole.
- **DO NOT INSTALL IN LOCATIONS WITH HIGH MOISTURE OR DUST.** Avoid installing the unit in locations with high incidence of moisture or dust. Moisture or dust that penetrates into this unit may result in product failure.

- Use a soft dry cloth for periodic cleaning of the product. For more severe stains, please dampen the cloth with water only. Anything else has the chance of dissolving the paint or damaging the plastic.
- Be sure the temperature inside the vehicle is between +45°C (+113°F) and 0°C (+32°F) before turning your unit on.
- If you have problems, do not attempt to repair the unit yourself. Return it to your Alpine dealer or the nearest Alpine Service Station for servicing.

Handling USB Flash drive

- This unit can control a memory storage device that supports the USB Mass Storage Class (MSC) protocol. Playable audio file formats are MP3, WMA, AAC and FLAC.
- USB Flash drive function is not guaranteed. Use USB flash drive according to the terms of agreement. Read the USB flash drive Owner's Manual thoroughly.
- Avoid usage or storage in the following locations:
  Anywhere in the car exposed to direct sunlight or high temperatures
  Anywhere the possibility of high humidity or corrosive substances are present .
- Fix the USB flash drive in a location where driver operation will not be hindered.
- USB Flash drive may not function correctly at high or low temperature Use only certified USB flash drive. Note that even certified USB flash drive, may not function correctly depending on its type or state.
- Depending on the settings of the USB flash drive type, memory state or encoding software, the unit may not play back or display properly.

- USB Flash drive may take time to start playback. If there is a particular file other than audio in the USB flash drive, it may take considerable time before the file is played back or searched. The unit can play back "mp3." "wma" or "mdi file extensions.
- Do not add the above extensions to a file other than audio data. This non-audio data will not be recognized. The resulting playback may contain noise that can damage speakers and/or amplifiers. It is recommended to back up important data on a personal computer.
- Do not remove the USB device while playback is in progress. Change SOURCE to something other than USB, then remove the USB device to prevent possible damage to its memory.
- Windows Media and the Windows logo are trademarks, or registered trademarks of Microsoft Corporation in the United States and/or other countries.
- Apple, iPhone, and Siri are trademarks of Apple Inc., registered in the U.S. and other countries. Apple CarPlay is a trademark of Apple Inc.
- Use of the Made for Apple and Works with Apple badges means that an accessory has been designed to connect specifically to the Apple product(s) identified in the Made for Apple badge and to work specifically with the technology identified in the Works with Apple badge, and has been certified by the developer to meet Apple performance standards. Apple is not responsible for the operation of this device or its compliance with safety and regulatory standards. Please note that the use of this accessory with an Apple product may affect wireless performance.
- Use of the Apple CarPlay logo means that a vehicle user interface meets Apple performance standards. Apple is not responsible for the operation of this vehicle or its compliance with safety and regulatory standards. Please note that the use of this product with iPhone may affect wireless performance.
- Google, Android, Android Auto, Google Play and other marks are trademarks of Google LLC.
- The Bluetooth' word mark and logos are registered trademarks owned by the Bluetooth SIG, Inc. and any use of such marks by Alpine Electronics, Inc. is under license.
- MPEG Layer-3 audio coding technology licensed from Fraunhofer IIS and Thomson. Supply of this product only conveys a license for private, non-commercial use and does not convey a license nor imply any right to use this product in any commercial (ie, revenue-generation) real time broadcasting (terrestrial, satellite, cable and/or any other media). broadcasting/streaming via internet, intranets and/or other networks or in other electronic content distribution systems, such as pay-audio or audio-on-demand applications. An independent license for such use is required. For details, please visit http//www.mp3licensing.com.

- Only an iPhone or USB flash drive can be connected to the USB connector on this unit. Correct performance using other USB products cannot be guaranteed.
- If the USB connector is used, be sure to use only the supplied connector cable with the unit. A USB hub is not supported.
- Depending on the connected USB flash drive, the unit may not function or some functions may not be performed.
- The audio file format that can be played back on the unit is MP3/WMA/AAC/FLAC.
- Artist/song name, etc., can be displayed. Certain, special characters may not be correctly displayed.

1. Product overview

1.1 Included items

Ensure that all the items are included when you open the product box.

The standard items may change without prior notice.

1.1.1 DVR-C320R (2 camera)

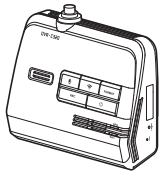

Front camera (main unit)

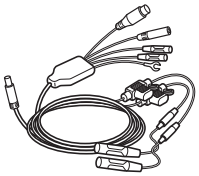

Hardwiring cable

Cable clamp holder

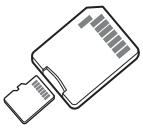

microSD card with adapter (consumable)

Quick start guide & Warranty / User guide (stored in the microSD card)

Dash cam recording warning sticker

Car charger

Rear camera

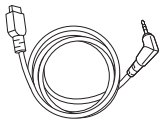

Rear camera cable

Rear camera extension cable

1.1.2 DVR-C320S (1 camera)

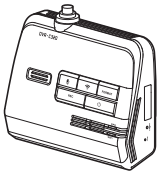

Front camera (main unit)

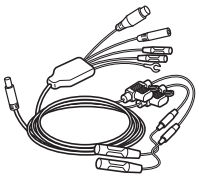

Hardwiring cable

Cable clamp holder

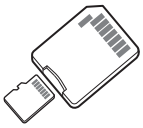

microSD card with adapter (consumable)

Quick start guide & Warranty / User guide (stored in the microSD card)

Dash cam recording warning sticker

Car charger

1.1.3 RVC-C320 (rear view only)

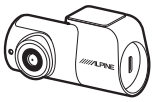

Rear camera

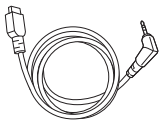

Rear camera cable

Rear camera extension cable

Cable clamp holder

1.2 Part names

1.2.1 Front camera (main unit) - front view

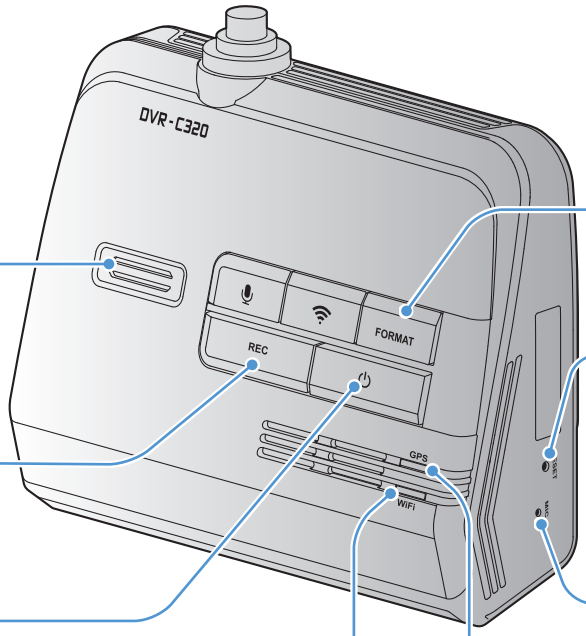

Speaker
Outputs the voice guide and buzzer sounds to indicate the product's status.

Voice recording button
Press to enable or disable voice recording.

Power button
Press and hold to turn off the product.
Press to turn on the product.

Format button
Press and hold to format the memory card.

Reset button
Insert the tip of a sharp object to reset the product when an error occurs.

Microphone
Used for voice recording.

GPS LED
Indicates the GPS connection status.

Wi-Fi LED
Indicates the Wi-Fi connection status.

- To reset the product, press and hold the voice recording ( ) and manual recording (**REC**) buttons simultaneously until you hear beeps.
- Refer to the following table to check the status of the product using the LED indicators.

LED	LED STATUS	Operation description
Security LED	(light on)	The product is turned on.
Wi-Fi LED	(light on)	In AP mode (Wi-fi connected).
	(flickers)	In AP mode (Wi-fi disconnected).
GPS LED	(light on)	GPS has been connected.
	Off	GPS has been disconnected.

1.2.2 Front camera (main unit) - rear view

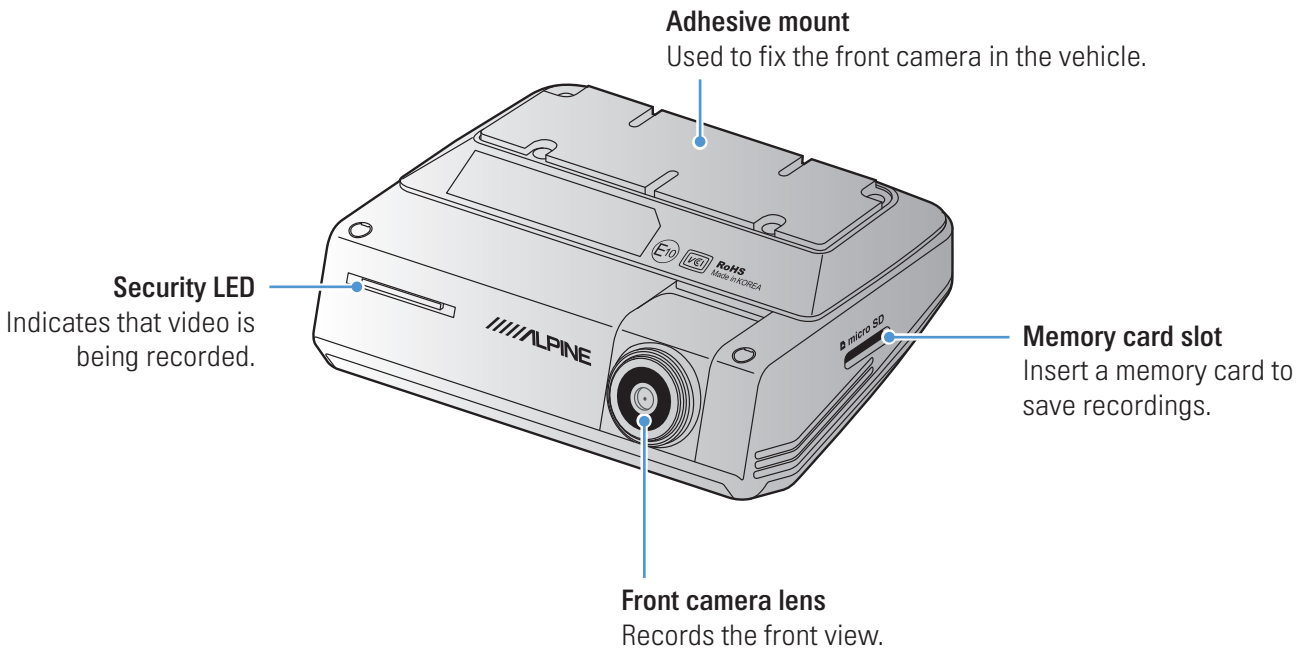

1.2.3 Rear camera (RVC-C320)

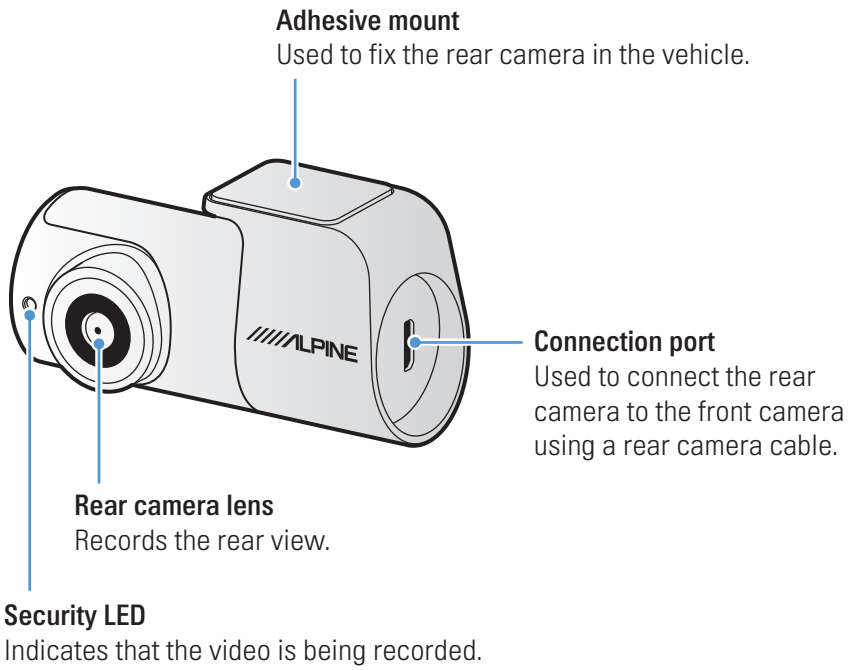

1.3 Removing and inserting the memory card

Follow the instructions to remove the memory card from the product or to insert the memory card into the product.

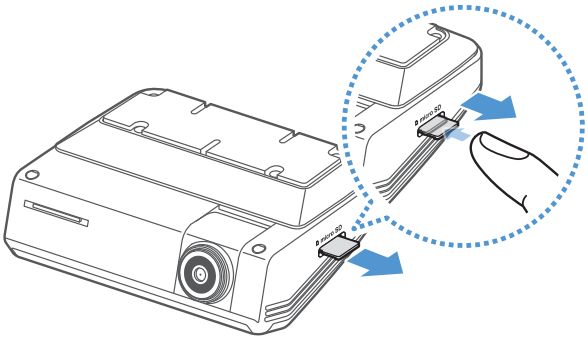

Before removing the memory card, ensure that the product is turned off. Gently push the bottom of the memory card with your fingernail to release it, and then remove it from the product.

To insert the memory card into the memory card slot, ensure that the metal contacts on the memory card are facing toward the product's buttons, and insert it into the slot until you hear a click.

- Ensure that the product is turned off before removing the memory card. The recorded video files may be corrupted or lost if you remove the memory card while the product is on.
- Ensure that the memory card is in the correct direction before inserting it into the product. The memory card slot or the memory card may be damaged if it is inserted incorrectly.
- Use only authentic memory cards from Alpine. Alpine does not guarantee the compatibility and normal operation of third-party memory cards.

To prevent loss of recorded video files, periodically back up the video files on a separate storage device.

1.4 Overviewing connection diagram

Follow the connection diagram to properly install the product.

> The connection diagram is for reference only. The product must be professionally installed in the vehicle by a trained mechanic.

1.4.1 2 Camera connection diagram (DVR-C320R)

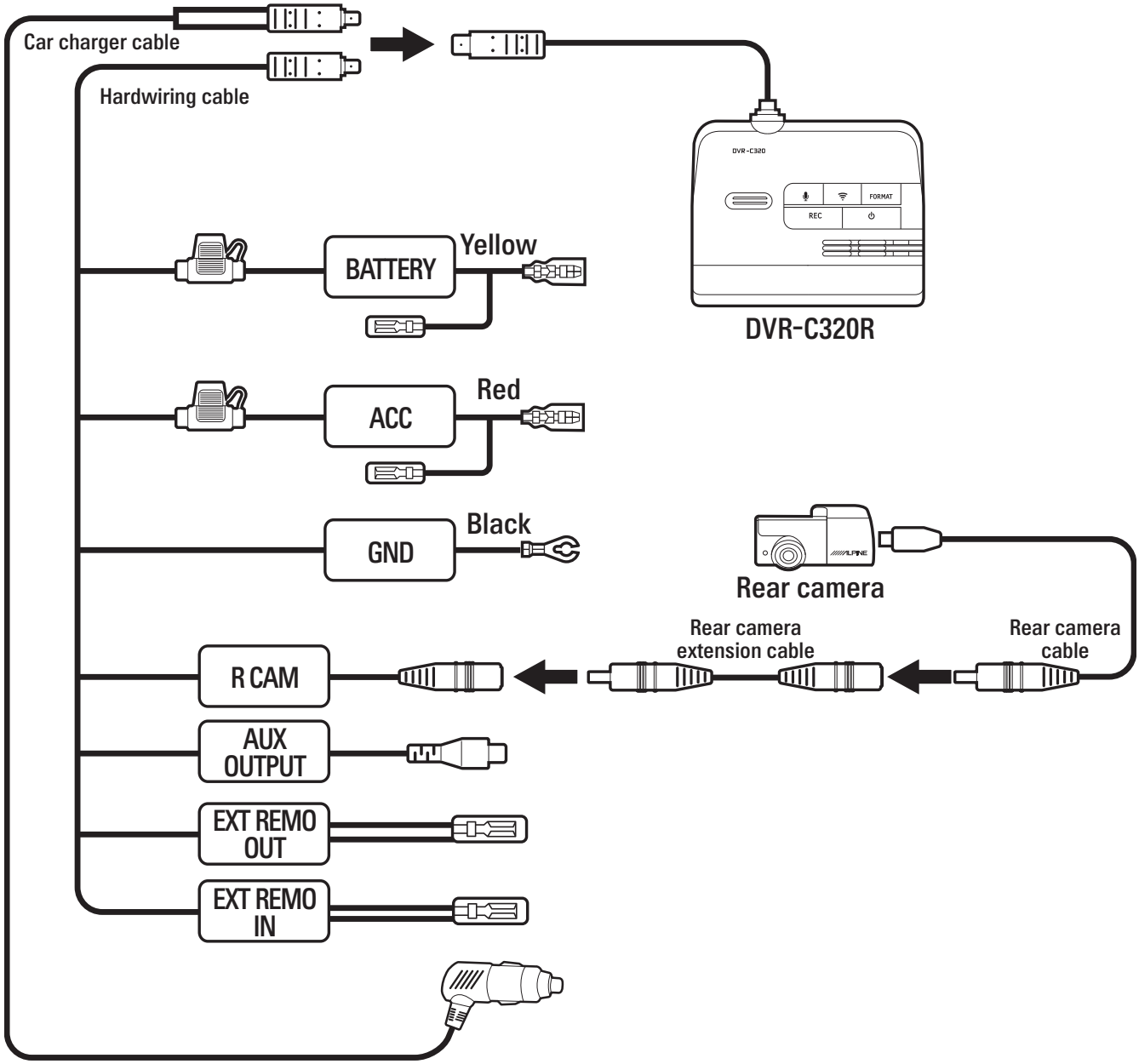

1.4.2 1 Camera connection diagram (DVR-C320S)

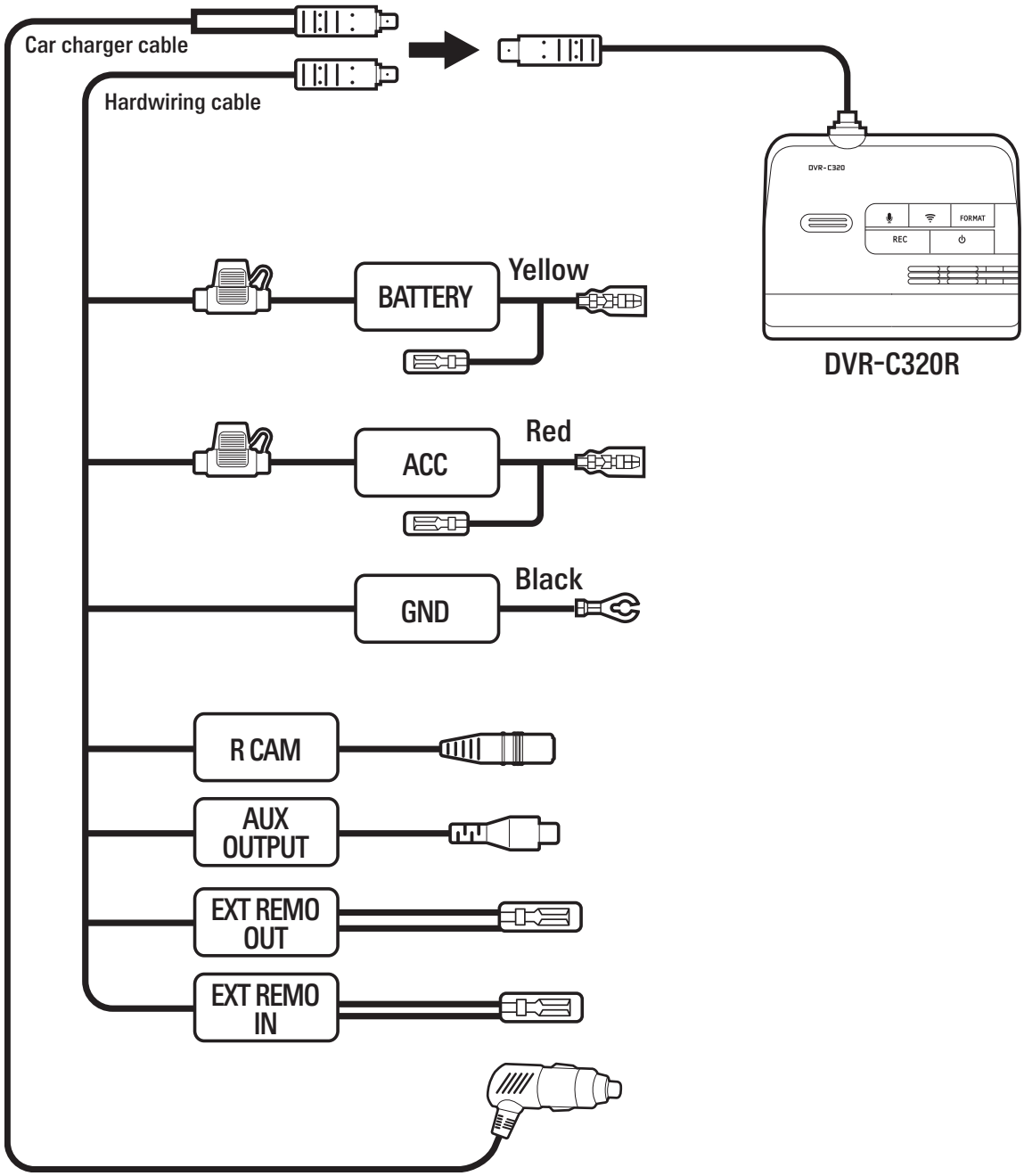

2. Installing the product

2.1 Installing the front camera (main unit)

Follow the instructions to properly install the product.

2.1.1 Selecting an installation location

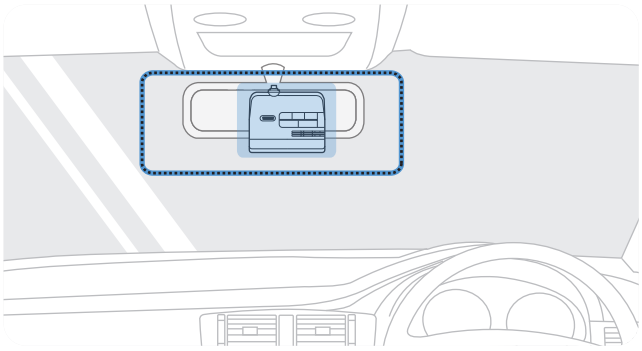

Select an installation location that can record the entire view in front of the vehicle without obstructing the driver's vision. Ensure that the front camera lens is located in around the center of the windshield.

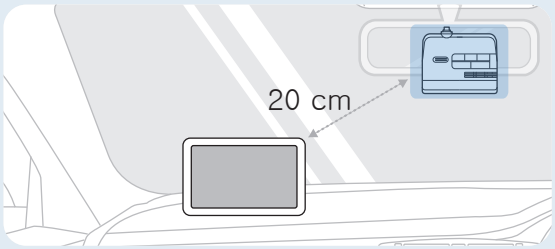

If a GPS navigating device is installed on the dashboard, its GPS reception may be affected depending on the dashboard camera's installation location.
Adjust the installation location of the GPS navigating device to ensure that the two devices are separated by at least 20 centimeters (approximately 8 inches).

2.1.2 Securing the product

Follow the instructions to secure the product at the installation location.

1 After determining the installation location, wipe the installation location on the windshield with a dry cloth.

2

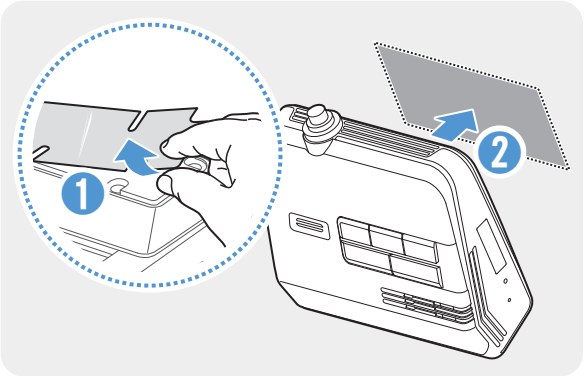

Remove the protective film from the bottom of the product, and then attach the product to the installation location.

3

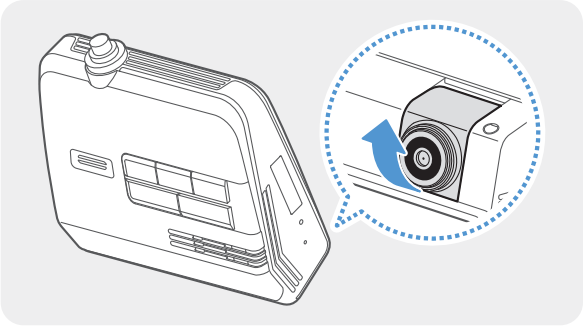

Set the vertical angle of the camera appropriately.

To confirm the camera angle, record a video after installation and check the video using the mobile viewer or the PC viewer. If necessary, adjust the camera angle again. For more information about the mobile viewer or the PC viewer, refer to "4. Using the mobile viewer" on page 23 or "5. Using the PC viewer" on page 24.

2.2 Installing the rear camera

Refer to the following instructions to properly install the rear camera.

2.2.1 Selecting an installation location

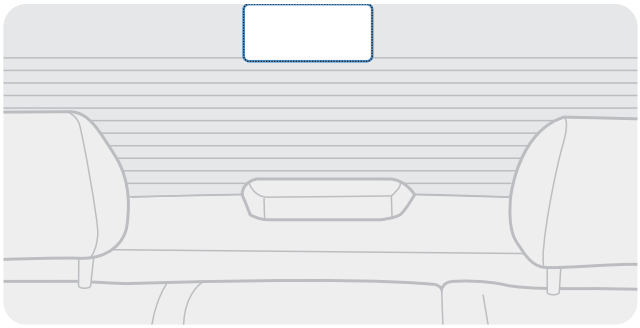

Select a location on the rear windshield where there is no defrost grid wire and the camera can record the entire rear view.

- For vehicles with a sunshade attached to the rear windshield, you must select a location where using the sunshade will not interfere with camera operation.
- The adhesive part of the rear camera should not touch the defrost grid.

2.2.2 Securing the rear camera

Refer to the following instructions to secure the product to the installation location.

1 After determining the installation location, wipe the installation surface of the windshield with a dry cloth.

> Check the installation location before you secure the rear camera to the rear windshield. After securing the rear camera to the windshield, it is hard to remove the camera or change the installation location due to the strong adhesive.

2 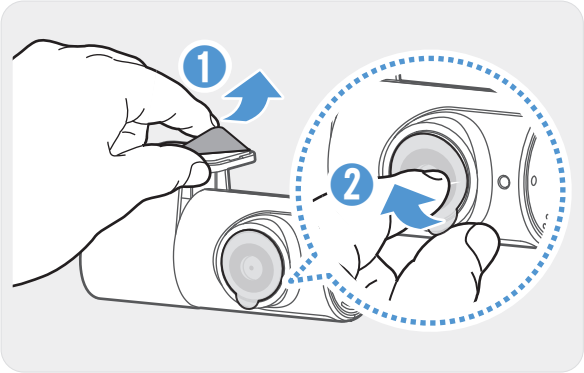

Remove the protective film from the adhesive mount and camera lens.

3 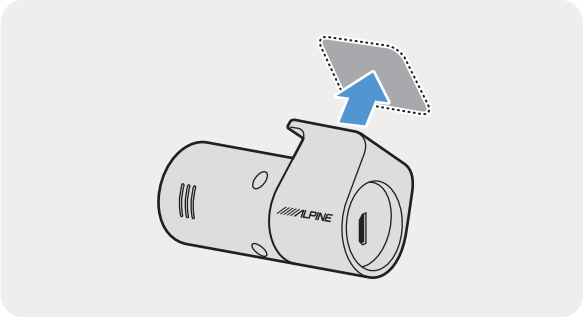

Attach the product with the Alpine logo facing indoors and press the adhesive tape firmly to secure the camera.

> If the product is fixed in reverse, the rear view will be recorded upside down.

4 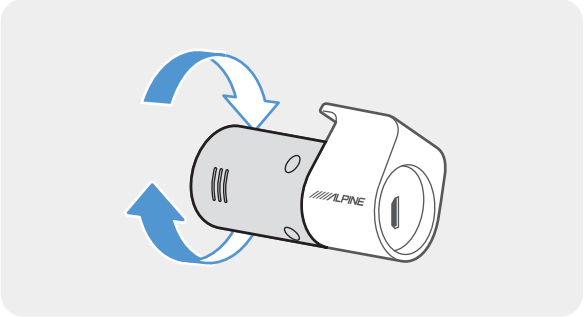

Adjust the camera's vertical angle.

2.2.3 Connecting the rear camera cable

Power off the product and connect the rear camera cable to the front camera (main unit).

1 Connect one end of the rear camera cable to the front camera's V-IN port.

2 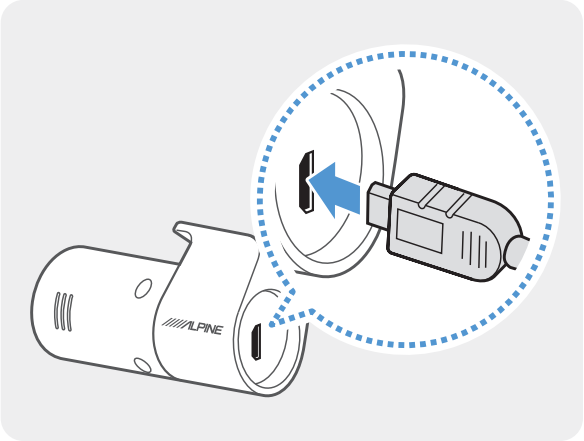

Connect the other end of the rear camera cable to the rear camera's connection port.

For safe driving, arrange the cables to prevent the driver's vision from being obstructed or interfering with driving.

3 Turn on the ACC or start the engine to check if the product is powered on. After the product is powered on, the voice guidance will be turned on.

The product is powered on when the ACC mode is turned on or when the engine starts.

3. Using recording features

3.1 Turning the product on or off

The product is turned on automatically and continuous recording starts when you turn on the ACC or start the engine.

Wait until the product is completely booted up after turning it on, and then begin operating the vehicle. The video recording does not begin until the product is completely turned on (booted up).

3.2 Learning about file storage locations

Videos are stored in the following folders according to their recording mode.

On the mobile viewer	Continuous	Continuous Incident	Manual Recording	Motion Detection	Parking Incident
In the memory card	cont_rec	evt_rec	manual_rec	motion_ timelapse_rec	parking_rec

Play videos on Window/Mac computer or using the **ALPINE Recording Viewer** application. If you play videos by inserting the memory card in devices such as a smartphone or a tablet PC, the video files may be lost.

A file name is composed of the recording start date and time, and the recording option.

YYYY_MM_DD HH_MM_SS

REC_2020_07_01_10_25_30_F.MP4

REC_2020_07_01_10_25_30_R.MP4

Recording conditions

- F: Front camera
- R: Rear camera

3.3 Using the continuous recording feature

Connect the power cable to the product's DC-IN power port and then turn on the vehicle's electrical accessories or start the engine. The voice guide will indicate that continuous recording has started.

During continuous recording, the product operates as follows.

Mode	Operation description
Continuous recording	During driving, videos are recorded in 1 minute segments and stored in the **"cont_rec"** folder.
Incident continuous recording*	When an impact to the vehicle is detected, a video is recorded for 20 seconds (from 10 seconds before the detection to 10 seconds after the detection) and stored in the **"evt_rec"** folder.
Incident continuous Recording for BCWS (Back Corner Warning)	When rear and corner collision danger is detected, a video is recorded for 20 seconds (from 10 seconds before detection to 10 seconds after detection). BCWS videos are saved as "BC" after the file name, and stored in the "evt_rec" folder.

* When an impact to the vehicle is detected during continuous recording, incident continuous recording starts with a double beep sound.

- Wait until the product is completely booted up after turning it on, and then begin operating the vehicle. The video recording does not begin until the product is completely turned on (booted up).
- When incident continuous recording starts, a double "beep" sounds as a notification.
- To enable recording, you must insert a memory card into the product.

3.4 Recording manually

You can record a scene you want to capture while driving and store it as a separate file.

To start manual recording, press the manual recording (**REC**) button. Then, the voice guide will indicate that manual recording has started.

During manual recording, the product operates as follows.

Mode	Operation description
Manual recording	When you press the manual recording (**REC**) button, a video will be recorded for 1 minute (from 10 seconds before to 50 seconds after pressing the button) and stored in the **"manual_rec"** folder.

3.5 Using parking mode

When the product is connected to the vehicle via the hardwiring cable, the operating mode is switched to parking mode after the engine or electrical accessories are turned off and the voice guide will indicate that the parking mode has started.

- Parking mode operates only when the hardwiring cable is connected. The hardwiring cable must be professionally installed to the vehicle by a trained mechanic.
- To use all recording modes, you must insert a memory card into the product.
- Depending on the battery charging status of the vehicle, the duration of parking mode may differ. If you want to use parking mode for an extended period, check the battery level to prevent battery depletion.

If you do not want to use parking mode or you want to change the mode settings, from the mobile viewer, tap **Dash Cam Settings > Record Settings**.

Refer to the following table to set the **Parking Mode** options.

Option		Operation description
Motion Detection	No motion or impact detected	Monitors movement in the area or impacts to the vehicle. Video will be recorded only when motion or an impact is detected.
	Motion detected	When a moving objects is detected while parking, a video is recorded for 20 seconds (from 10 seconds before detection to 10 seconds after detection) and stored in the **"motion_timelapse_rec"** folder.
	Impact detected	When an impact is detected while parking, a video is recorded for 20 seconds (from the moment 10 seconds before detection to 10 seconds after detection) and stored in the **"parking_rec"** folder.
Time Lapse	No impact detected	A videos is recorded at a rate of 2 fps for 10 minutes, compressed into a 2-minute long file, and stored in the **"motion_timelapse_rec"** folder. Since the video file recorded with this option is small, you can record a long video.
	Impact detected	When an impact is detected while parking, a video is recorded for 100 seconds at a rate of 2 fps (from the moment 50 seconds before detection to 50 seconds after detection) and stored in the **"parking_rec"** folder after being compressed into a 20-second long file. (The buzzer will sound.)
Energy Saving	No impact detected	Monitors impacts to the vehicle. Video will be recorded only when an impact is detected.
	Impact detected	When an impact is detected while parking, a video is recorded for 20 seconds (from within 1 second after detection) and stored in the **"parking_rec"** folder.
OFF		The product is powered off when electric accessories and the engine are turned off.

If parking mode settings are changed, the videos recorded with the previous settings will be deleted. To prevent data loss, back up all parking mode videos before changing parking mode settings.

You cannot use Motion Detection, Time Lapse, or Energy Saving at the same time.

3.6 Using the Super Night Vision 2.0

With the Super Night Vision 2.0 feature, you can record videos that are much brighter than videos recorded without this feature. This feature is enabled by real-time image signal processing (ISP) to improve the brightness of recorded videos, both while driving and parking at night.

1 From the mobile viewer, tap **Dash Cam Settings > Record Settings**.

2 From **Super Night Vision 2.0**, select the desired recording mode to use the Super Night Vision 2.0 feature. The new setting is applied automatically.

3.7 Using the road safety features

The road safety features include a safety camera alert system, a lane departure warning system (LDWS), a forward-collision warning system (FCWS), a low speed Forward collision warning system (low-speed FCWS), blind-sport collision warning system (BCWS) and a front vehicle departure warning (FVDW).

Safety feature	Description
LDWS (Lane Departure Warning)	Detects the lane departure via the real-time video image and warns the driver.
FCWS (Forward Collision Warning)	Detects forward collision danger via the real-time video image and warns the driver when the vehicle drives at 30 km/h or above.
Low Speed FCWS	Detects forward collision danger via the real-time video image and warns the driver when the vehicle drives at 30 km/h or lower.
BCWS (Back Corner Warning)	Detects rear and corner collision danger via real-time video and warns the driver. BCWS videos are saved as “BC” after the file name, and stored in the "evt_rec" folder.
FVDW (Front Vehicle Departure Warning)	Detects the departure of the vehicle in front and notify the driver.

Road safety features are performed differently depending on the set speed and sensitivity of the features.

To use and manage the road safety features, tap **Dash Cam settings > Record Settings** on the mobile viewer. For more information about road safety features settings, refer to "6.4 Setting road safety features" on page 31.

4. Using the mobile viewer

You can view and manage recorded videos and configure various product features on your smartphone.

- One of the following environments is required to use the **ALPINE Recording Viewer** application:
  - Android 7.0 (Nougat) or higher
  - iOS 11.4 or higher
- The Wi-Fi password is required when you connect the product to a smartphone for the first time. Enter "**123456789**" in the password input field.

4.1 Connect the product to a smartphone

1 On your smartphone, open the Google Play Store or Apple App Store and download and install **ALPINE Recording Viewer**.

2 Run **ALPINE Recording Viewer**.

3 Tap **Dash cam connection is required.** at the bottom of the screen and follow the on-screen instructions to connect the product to a smartphone.

4.2 Viewing the mobile viewer screen layout

The following provides brief information about the mobile viewer's screen layout.

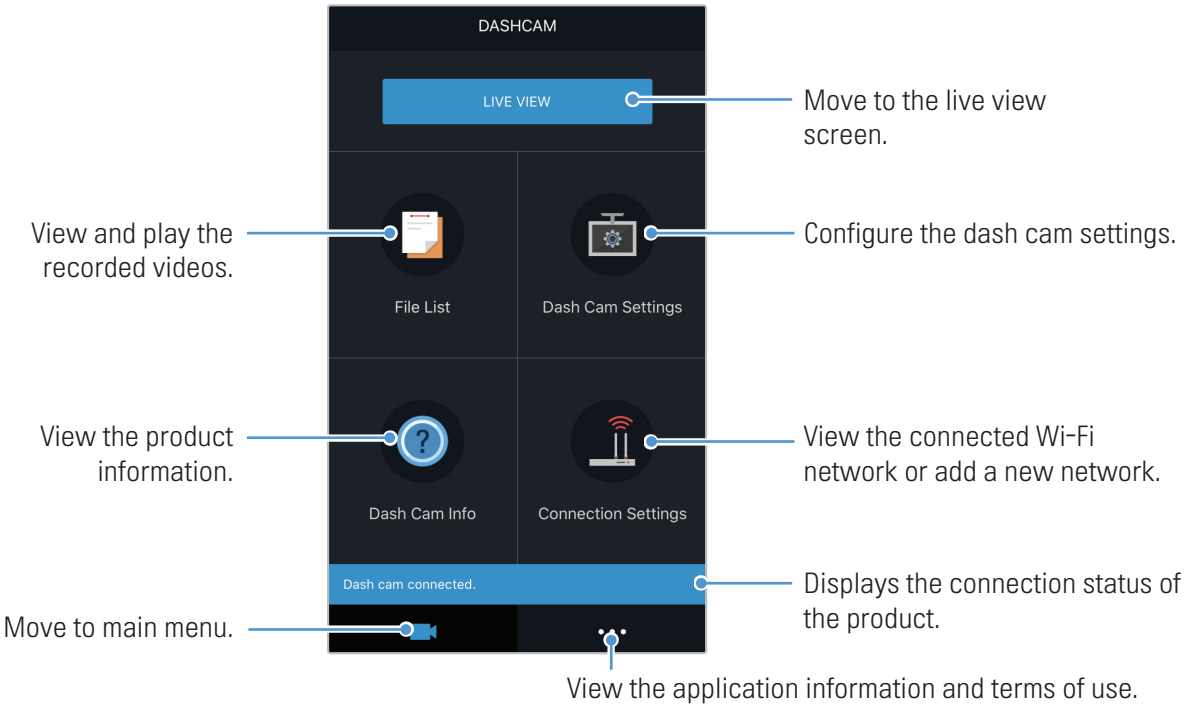

5. Using the PC viewer

You can view and manage the recorded videos and configure various product features on your PC.

5.1 System requirements

The following are the system requirements for running the PC viewer.

- Processor: Intel Core i5, or higher
- Memory: 4 GB or more
- Operating system: Windows 7 or later (64-bit is recommended), macOS X10.8 Mountain Lion or later
- Other: DirectX 9.0 or higher / Microsoft Explorer version 7.0 or higher

The PC viewer will not operate properly on PC systems running an operating system other than those listed in the system requirements.

5.2 Learning about the PC viewer

5.2.1 Installing the PC viewer

You can download the latest PC viewer software from the Alpine website (https://www.alpine.co.jp/).

The PC viewer installation file (setup.exe) is stored in the root folder of the memory card that is provided with the product. Follow the instructions to install the PC viewer on your PC.

1. Insert the memory card into a memory card reader connected to your PC.

2. Move the installation file to the desktop, run it, and complete the installation according to the instructions given in the installation wizard.
   After the installation is complete, there will be a shortcut icon to ALPINE Recording PC Viewer.

5.2.2 PC viewer screen layout (for Windows)

The following provides brief information about the PC viewer's screen layout.

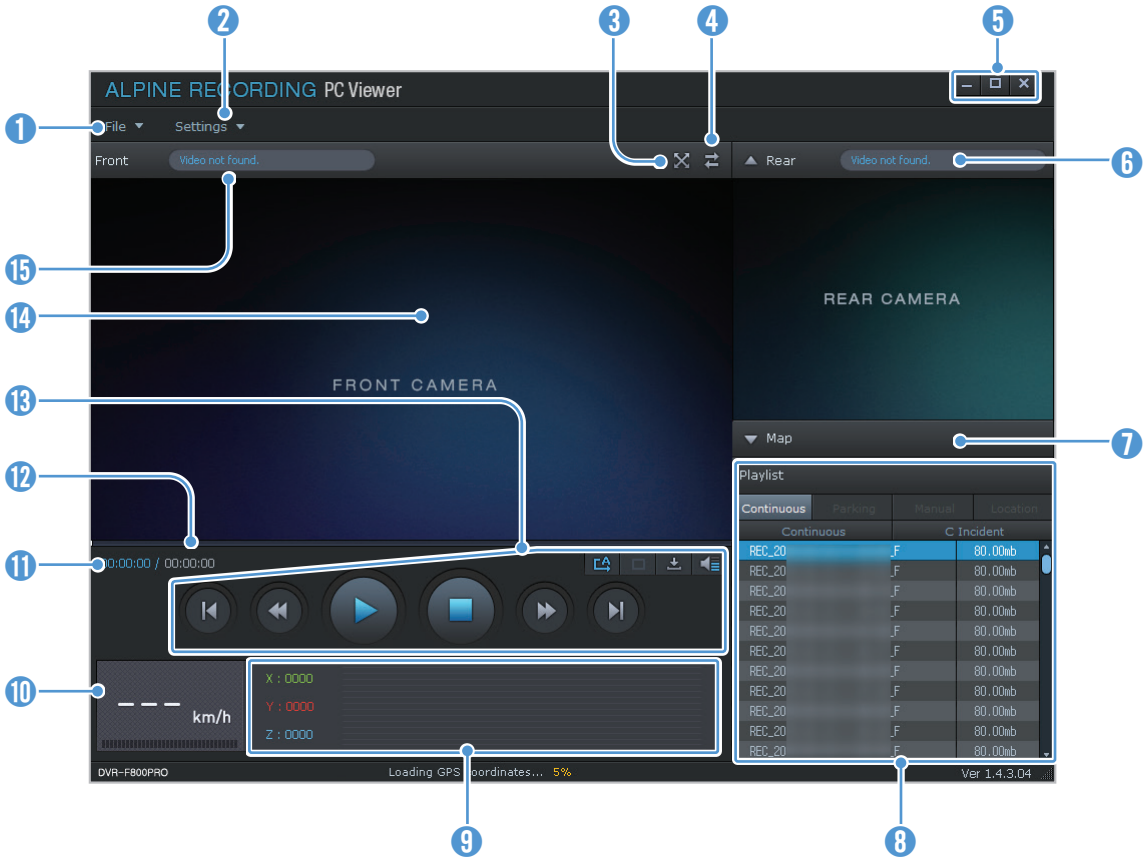

Number	Description
1	Open a file, or save a video with a different name.
2	View or configure the dash cam settings, and set the language for the PC viewer.
3	Display the current video in full screen. Tap the Back ( ) button to return to the previous screen.
4	Switch between the front and rear videos.
5	Minimize, expand, or close the software.
6	Display the recorded rear camera video.
7	Display the map screen.
8	Displays the playlist.
9	Indicates the G sensor value at the time of recording.
10	Indicates the vehicle's driving speed at the time of recording.
11	Displays the current and total running time of the current video.
12	Displays the progress of video playback.
13	Play or control a video.
14	Displays the current video.
15	Displays the video file name.

5.2.3 Playing recorded videos on the PC viewer (for Windows)

Follow the instructions to play recorded videos.

1 Turn off the product and remove the memory card.

2 Insert the memory card into a memory card reader connected to your PC.

3 Double-click the shortcut to the PC viewer ( ) to open the program. The video files in the memory card will be automatically added to the playlist in the bottom-right corner of the PC viewer screen. The playlist section layout is as follows.

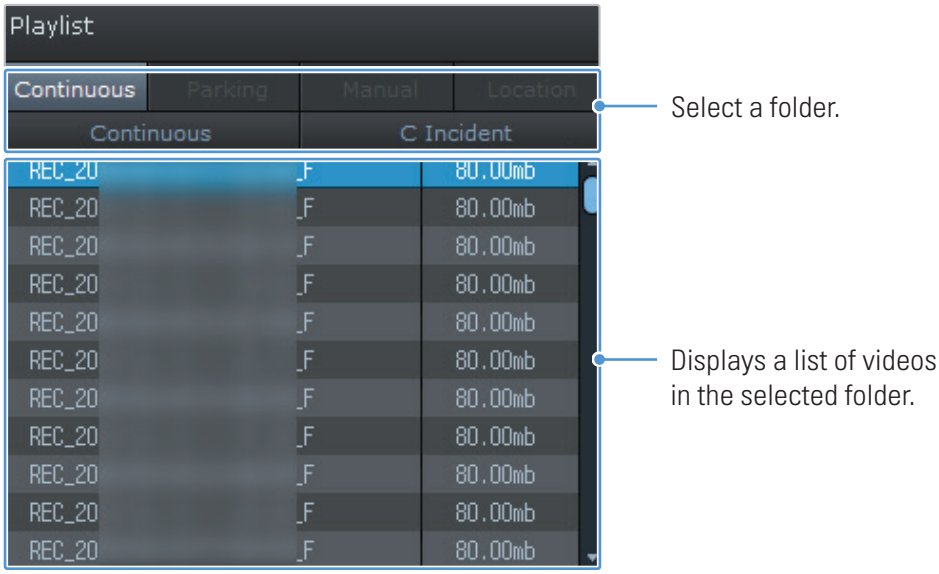

4 Double-click a video file after selecting a video folder, or click the Play (▶) button after selecting a video file. The selected video file will be played.

If the video files on the memory card are not automatically added to the playlist when you run the PC viewer, click **File▼ 〉 Open**, select the removable storage device for the memory card, and click **Confirm**.

5.2.4 PC viewer screen layout (for Mac)

The following provides brief information about the PC viewer's screen layout.

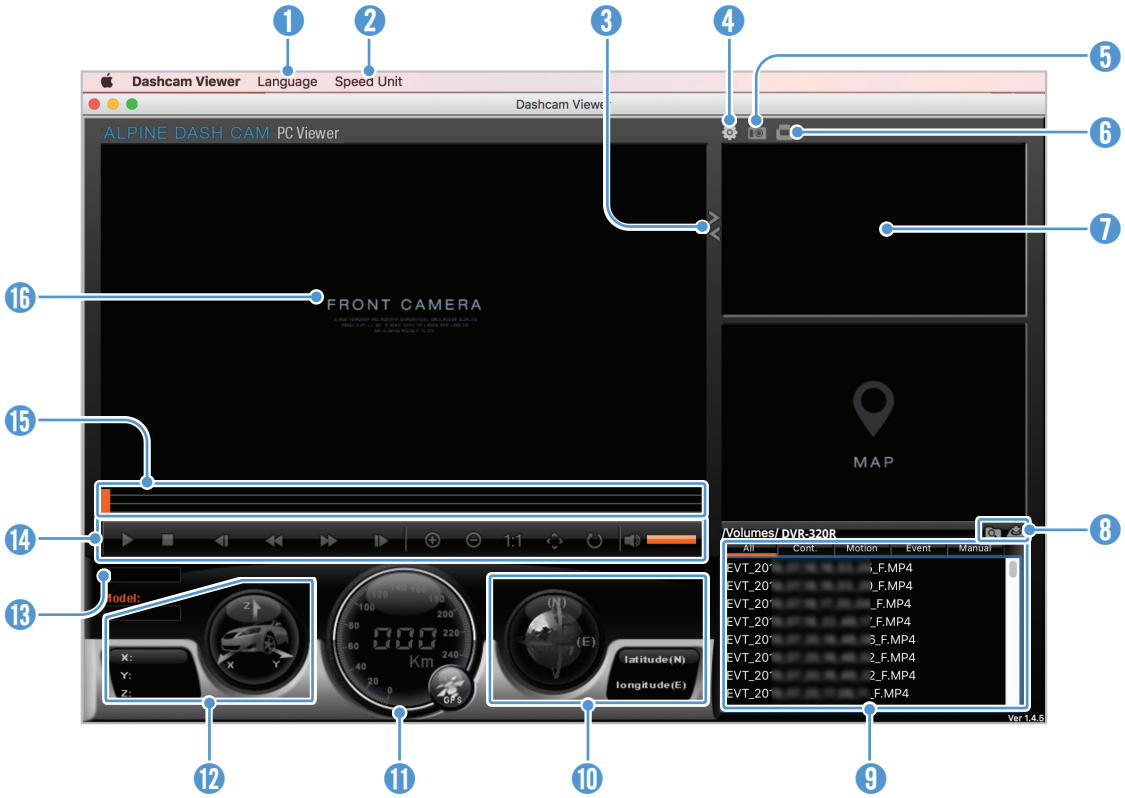

Number	Description
1	Set the language for the PC viewer.
2	Set the speed unit.
3	Switch between the front and rear videos.
4	View or configure the dash cam settings.
5	Save the current scene.
6	Print the current scene.
7	Displays the current rear video.
8	Open a file, or save a video with a different name.
9	Displays the playlist.
10	Displays the GPS information at the time of recording.
11	Indicates the vehicle's driving speed at the time of recording.
12	Indicates the G sensor value at the time of recording.
13	Displays the current and total running time of the current video.
14	Play or control a video.
15	Displays the progress of video playback.
16	Displays the current front video. Right-click this pane to display the current video in full screen.

5.2.5 Playing recorded videos on the PC viewer (for Mac)

Follow the instructions to play recorded videos.

1 Turn off the product and remove the memory card.

2 Insert the memory card into your Mac using a SD card reader or SD card adapter provided.

3 Open the PC viewer.

4 Click and locate the memory card.

The video files in the memory card will be automatically added to the playlist in the bottom-right corner of the PC viewer screen. The playlist section layout is as follows.

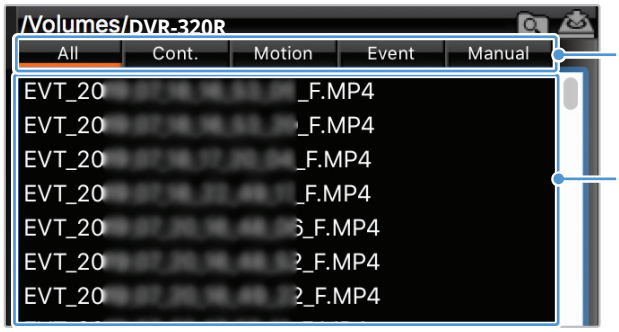

Select a folder.

Displays a list of videos in the selected folder.

5 Double-click a video file after selecting a video folder, or click the Play (▶) button after selecting a video file. The selected video file will be played.

6. Settings

You can set the product features according to your needs and preferences using the mobile viewer or the PC viewer. The following procedures are based on the mobile viewer.

The product will stop recording while configuring settings on the mobile viewer.

Select **Disable** to turn off the feature.

6.1 Managing the memory card

From the mobile viewer, tap **Dash Cam settings** > **Memory Card Settings** to manage the memory card settings.

Options	Description
Memory Partition	Select from **Continuous Priority/Incident Priority/Parking Priority/Manual Priority/ Driving Recording Only** for the memory partition type.
Formatting Memory Card	In **Formatting Memory Card**, tap **Format** > **OK** to proceed with formatting the memory card.

Do not disconnect the power or remove the memory card from the product while partitioning or formatting. Doing so may cause serious damage to the data stored in the memory.

6.2 Setting the Camera

From the mobile viewer, tap **Dash Cam settings** > **Camera Settings** to adjust the camera settings.

Options	Description
Brightness-front	Select from **Dark/Mid/Bright** for the brightness of the front camera.

6.3 Setting recording features

From the mobile viewer, tap **Dash Cam settings > Record Settings** to manage the recording features settings.

Options	Description
Voice Recording	Select from **Enabled/Disabled**.
Continuous Mode Incident Recording Sensitivity	Select from **Disabled/Lowest/Low/Mid/High** for the sensitivity.
Super Night Vision 2.0	Select from **Disabled/Continuous Mode/Parking Mode/Continuous+Parking** for the Super Night Vision 2.0 mode.
Parking Mode	Select from **Disabled/Motion Detection/Energy Saving** for the parking mode.
Impact Sensitivity in Parking Mode	Select from **Lowest/Low/ Mid/High/Highest** for the sensitivity.
Motion Detection Sensitivity	Select from **Lowest/Low/Mid/High/Highest** for the sensitivity.
Record Timer	Select from **Disabled/3hrs/6hrs/12hrs/24hrs/24hrs/48hrs/72hrs** for the recording time.
Battery Protection	Select from **Enabled/Disabled**.
Battery cutoff voltage	Select from **12V (11.6-12.3)/24V (23.2-24.6)** for the voltage.
Wintertime Battery Protection	Select the month(s) to apply the battery protection feature.

- To use parking mode, you must install the hardwiring cable. If continuous power is not supplied to the product, the product will stop recording when the vehicle engine is turned off.
- The vehicle's battery will not be charged while the vehicle is parked. If you record in parking mode for an extended period, the vehicle's battery may be depleted and you may not be able to start the vehicle.

- For more information about parking mode, refer to "3.5 Using parking mode" on page 21.
- The battery cutoff voltage can be set only when the **Battery Protection** setting is set to **Enabled**.
- If the off voltage value is too low, the product may consume the battery completely depending on various conditions, such as the vehicle type or temperature.

6.4 Setting road safety features

From the mobile viewer, tap **Dash Cam settings > Road Safety Settings** to manage the road safety features settings.

Options	Description
Safety Cameras	Select from **Enabled/Disabled**.
Mobile Zone Alert	Select from **Enabled/Disabled**.
Vehicle Type	Select from **Sedan/SUV/Truck (Bus)** for the vehicle type.
Initialize ADAS	In **Initialize ADAS**, tap **Initialize > Confirm** to proceed with initializing.
LDWS (Lane Departure Warning)	Select from **Disabled/Low/Mid/High** for the LDWS sensitivity.
LDWS Speed	Select from **50km/h / 60km/h / 80km/h / 100km/h** the LDWS detection speed.
FCWS (Forward Collision Warning)	Select from **Disabled/Low/Mid/High** for the FCWS sensitivity.
Low Speed FCWS	Select from **Disabled/Low/Mid/High** for the low speed FCWS sensitivity.
BCWS	Select from **Enabled/Disabled**.
FVDW (Front Vehicle Departure Warning)	Select from **Enable/Disabled**.
ADAS Volume	Select the desired ADAS volume level.

6.5 Configuring the system settings

From the mobile viewer, tap **Dash Cam Settings > System Settings** to configure the hardware system settings.

Options	Description
Language	Select the desired language.
Volume	Select the desired volume level.
Security LED	Select the desired security LED mode.
Time Zone	Select the desired time zone.
Date / Time	Select the date and time.
Daylight Saving	Select from **Enabled/Disabled**.
Speed Unit	Select from **km/h/mph** for the speed unit.
Speed Stamp	Select from **Enabled/Disabled**.

If you select 0 for the volume level, the voice guidance will be disabled.

7. Accessing the product information

New users may benefit from the basic product information that can be accessed from the Menu screen.

7.1 Viewing product information

From the mobile viewer, tap **Dash Cam Info** to view product information. The following product information menus will be displayed on the screen.

- Model Name
- Memory Size
- Firmware Ver.
- Local ID
- Safety Camera Version
- MICOM Ver.

7.2 Accessing and configuring the GPS

A GPS module is used to include the location data in the recorded videos. From the mobile viewer, tap **Dash Cam Info 〉 GPS Info** to view the GPS features. The connection status, signal strength, time (UTC), vehicle speed, current altitude, and Horizontal Dilution of Precision (HDOP) will be displayed on the screen.

Tap to initialize the GPS, and allow it to locate the current position.

Horizontal Dilution of Precision (HDOP)
HDOP is a value that refers to GPS deviation due to satellite positioning.

8. Upgrading the firmware

A firmware upgrade is provided to enhance the product's features, operation or to increase stability. For optimal operation of the product, ensure that you keep the firmware up to date.

Follow the instructions to upgrade the firmware.

1. On your PC, open a web browser and go to https://www.alpine.co.jp/.
2. Select the product and download the latest firmware upgrade file.
3. Unzip the downloaded file.
4. Disconnect power to the product and remove the memory card.
5. Open the memory card on a PC and copy the firmware upgrade file to the root folder of the memory card.
6. While the power is disconnected from the product, insert the memory card into the memory card slot on the product.
7. Connect the power cable to the product, and then turn on the power (ACC ON) or start the engine to turn on the product. The firmware upgrade starts automatically, and the system will restart once the firmware update is completed.

   Do not disconnect the power or remove the memory card from the product during the upgrade. Doing so may cause serious damage to the product, or to the data stored in the memory card.

You can also update the firmware from the mobile viewer and the PC viewer.

9. Troubleshooting

The following table lists the problems users may encounter while using the product and measures to resolve them. If the problem persists after taking the measures provided in the table, contact the customer service center.

Problems	Solution
Cannot power on the product	• Make sure the power cable (the hardwiring cable) is connected to the vehicle and the product properly. • Check the vehicle's battery level.
The voice guide and/or buzzer do not sound.	Check if the volume is set to the minimum.
The video is unclear or hardly visible.	• Ensure that the protective film on the camera lens has been removed. The video may look unclear if the protective film is still on the camera lens. • Check the installation location of the front or rear camera, turn on the product, and then adjust the camera's viewing angle.
The memory card cannot be recognized.	• Ensure that the memory card has been inserted in the correct direction. Before inserting the memory card, ensure that the metal contacts on the memory card are facing toward the lens of the product. • Turn off the power, remove the memory card, and then check to ensure that the contacts in the memory card slot are not damaged. • Ensure that the memory card is an authentic product distributed by Alpine. Alpine does not guarantee compatibility and normal operation of third-party memory cards.
The recorded video cannot be played on a PC.	The recorded videos are stored as MP4 video files. Ensure that the video player installed on your PC supports the playback of MP4 video files.
GPS signal cannot be received.	The GPS signal may not be received in out-of-service areas, or if the product is located between tall buildings. Also, GPS signal reception may not be available during storms or heavy rain. Try again on a clear day at a location that is known to have a good GPS reception. It may take up to 5 minutes until GPS reception is established.

Before contacting a service center

Please back up all important data stored in the memory card. The data in the memory card may be deleted during repair. Every product requested for repair is regarded as a device that has had its data backed up. The customer service center does not back up your data. Alpine is not responsible for any loss, such as data loss.

10. Specifications

To see the product specifications, refer to the following table.

10.1 DVR-C320R (2 camera)

Item	Specification	Remarks
Model name	DVR-320R	
Dimensions / Weight	92 x 73.3 x 36.8 mm / 166.6 g	Rear camera: 61.06 x 32.8 x 27.6 mm / 26 g
Memory	microSD card	16 GB, 32 GB, 64 GB, 128 GB (UHS-I)
Recording mode	Continuous Rec	Records videos in 1-minute segments (dual channels are supported for recording the front and rear view)
	Incident Rec	Records 10 seconds before and after the incident (total 20 seconds)
	Incident continuous Recording for BCWS	Records 10 seconds before and after rear and corner collision danger is detected.
	Manual Rec	Records from 10 seconds before and 50 seconds after manually starting the recording (total 1 minute)
	Parking Rec (parking mode)	Motion Detection / Time Lapse / Energy Saving
Camera sensor	2.1M Pixels, CMOS, 1080p	2.12 M Pixels, 1920x1080
Angle of view (Lens)	Approximately 140° (diagonally)	Rear camera: approximately 160°
Video	FHD (1920 x 1080 @ 29fps / H.264 / MP4)	Rear camera: HD (1080 x 720 @ 30fps / H.264 / MP4)
Audio	HE-AAC	Press the voice recording button to turn the audio recording on or off
Acceleration sensor	3-axis acceleration sensor (3D, ±3G)	5 levels for sensitivity adjustment available
Rear camera	V-IN port	
GPS	Embedded GPS	Supports ADAS features (LDWS, FCWS, Low Speed FCWS, BCWS, FVDW).
Features	Format Free 2.0, High temperature shutdown, Fast Boot, Battery depletion protection	
GNSS	GPS / GLONASS	
Wi-Fi	802.11 b/g/n 2.4G	
Power input	DC 12 / 24 V supported	
Power consumption	2ch: 4.9 W / 1ch: 3.9 W (mean)	Except for the fully charged supercapacitor / GPS
Auxiliary power unit	Super capacitor	
LED indicator	GPS, Wi-Fi	
Alarm	Built-in speakers	Voice guide (buzzer sounds)
Operating temperature	14 – 140°F / -10 – 60°C	
Storage temperature	-4 – 158°F / -20 – 70°C	

10.2 DVR-C320S (1 camera)

Item	Specification	Remarks
Model name	DVR-320S	
Dimensions / Weight	92 x 73.3 x 36.8 mm / 166.6 g	
Memory	microSD card	16 GB, 32 GB, 64 GB, 128 GB (UHS-I)
Recording mode	Continuous Rec	Records videos in 1-minute segments (dual channels are supported for recording the front and rear view)
	Incident Rec	Records 10 seconds before and after the incident (total 20 seconds)
	Incident continuous Recording for BCWS	Records 10 seconds before and after rear and corner collision danger is detected.
	Manual Rec	Records from 10 seconds before and 50 seconds after manually starting the recording (total 1 minute)
	Parking Rec (parking mode)	Motion Detection / Time Lapse / Energy Saving
Camera sensor	2.1M Pixels, CMOS, 1080p	
Angle of view (Lens)	Approximately 140° (diagonally)	
Video	FHD (1920 x 1080 @ 29fps / H.264 / MP4)	
Audio	HE-AAC	Press the voice recording button to turn the audio recording on or off
Acceleration sensor	3-axis acceleration sensor (3D, ±3G)	5 levels for sensitivity adjustment available
Rear camera	V-IN port	
GPS	Embedded GPS	Supports ADAS features (LDWS, FCWS, Low Speed FCWS, BCWS, FVDW).
Features	Format Free 2.0, High temperature shutdown, Fast Boot, Battery depletion protection	
GNSS	GPS / GLONASS	
Wi-Fi	802.11 b/g/n 2.4G	
Power input	DC 12 / 24 V supported	
Power consumption	2ch: 4.9 W / 1ch: 3.9 W (mean)	Except for the fully charged supercapacitor / GPS
Auxiliary power unit	Super capacitor	
LED indicator	GPS, Wi-Fi	
Alarm	Built-in speakers	Voice guide (buzzer sounds)
Operating temperature	14 – 140°F / -10 – 60°C	
Storage temperature	-4 – 158°F / -20 – 70°C	

CE

Hereby, Alpine Electronics (Europe) declares that the radio equipment type DVR-C320R and DVR-C320S are in compliance with Directive 2014/53/EU.

The full text of the EU declaration of conformity is available at the following internet address: http://www.alpine.com/e/research/doc/

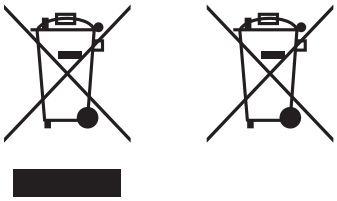

Information on Disposal of Old Electrical and Electronic Equipment and Battery (applicable for countries that have adopted separate waste collection systems)

If you want to dispose this product, do not mix it with general household waste. There is a separate collection system for used electronic products in accordance with legislation that requires proper treatment, recovery and recycling. Contact your local authority for details in locating a recycle facility nearest to you. Proper recycling and waste disposal will help conserve resources whist preventing detrimental effects on our health and the environment.

Important information on the software

About the software licence of the product

The software installed in the product contains open-source software.

See the following Alpine website for details on the open source software.

www.alpine-usa.com
www.alpine-europe.com

www.alpine-usa.com
www.alpine-europe.com

Ver. 1.0 (June. 2020)

ALPINE ELECTRONICS OF AMERICA, INC.
1500 Atlantic Boulevard, Auburn Hills,
Michigan 48326, USA
Phone: 1-800-ALPINE-1 (1-800-257-4631)

ALPINE ELECTRONICS OF U.K., LTD.
Alpine House Earlplace Business Park,
Fletchamstead Highway,
Coventry CV4, 9TW, U.K.

ALPINE ELECTRONICS GmbH SUCCURSALE FRANCE
184 allée des Erables
CS 52016 – Villepinte
95 945 Roissy CDG cedex
FRANCE
Phone: +33(0)1 48 63 89 89

ALPINE ELECTRONICS GmbH
Ohmstrasse 4, D-85716,
Unterschleissheim, Germany
Phone: 089-324264-0

ALPINE ITALIA S.p.A.
Viale C. Colombo 8,
20090 Trezzano Sul Naviglio (MI), Italy
Phone: +39 02 484781

ALPINE ELECTRONICS GmbH SUCURSAL EN ESPAÑA
C/Portal de Gamarra 36,
01013 Vitoria (Alava) - APDO 133
Phone: 945-28 35 88