THINKWARE DASH CAM™

U3000

User Guide

This product records videos while the vehicle is operating.
Read and follow the instructions in this guide to properly use and maintain the product.

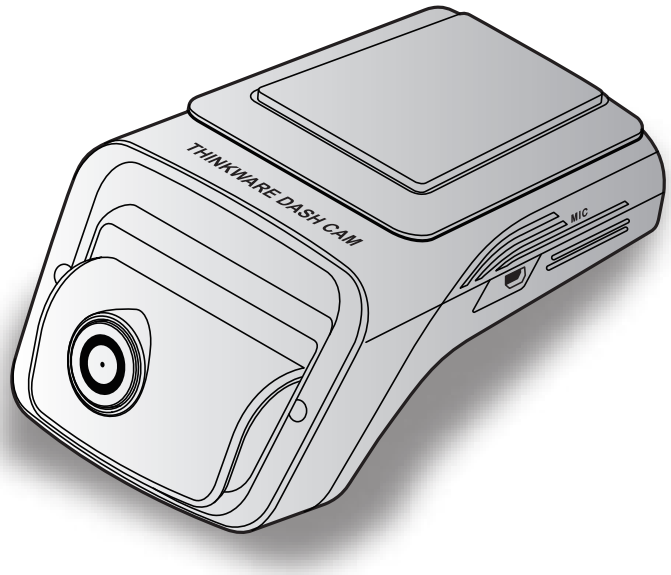

Before using the product

About the product

This product records videos while the vehicle is operating. Use this product only for reference when investigating incidents or road accidents. This product is not guaranteed to record for all events. The device may not record accidents with impacts that are too minor to activate the impact sensor or accidents with massive impacts that cause the vehicle's battery voltage to deviate.

Video recording does not begin until the product is completely turned on (booted up). To ensure that all vehicle events are recorded, wait until the product is completely booted up after turning it on, and then begin operating the vehicle.

THINKWARE is not responsible for any loss caused by an accident, nor is it responsible for providing any support regarding the outcome of an accident.

Depending on the vehicle's configuration or operating conditions, such as the installation of remote door lock devices, ECU settings, or TPMS settings, some product features may not be supported, and different firmware versions may influence the product's performance or features.

About the user guide

The information provided in the guide may change when the manufacturer updates its service policy.

This user guide is intended for THINKWARE U3000 model only, and it may contain technical errors, editorial errors, or missing information.

Copyrights

All rights for the content and maps in this guide are reserved by THINKWARE and are protected under copyright laws. All unauthorized duplication, revision, publication, or distribution of this guide without written consent from THINKWARE is prohibited and is eligible for criminal charges.

Registered trademarks

THINKWARE U3000 is a registered trademark of THINKWARE.

Other product logos and service names in this guide are trademarks of the relevant companies.

Information to user : RSS-247

This equipment complies with IC radiation exposure limits set forth for an uncontrolled environment. This equipment should be installed and operated with minimum distance 20 cm between the radiator & your body.

This device contains licence-exempt transmitter(s)/receiver(s) that comply with Innovation, Science and Economic Development Canada's licence-exempt RSS(s).

Please be cautioned the changes or modifications not expressly approved by the party responsible for compliance could void the user's authority to operate the equipment.

Notice: Operation is subject to the following two conditions : (1) this device may not cause interference, and (2) this device must accept any interference, including interference that may cause undesired operation of the device.

This Class B digital apparatus complies with Canadian ICES-003.

IC: 12594A-U3000

Contents

Safety information 5

1. Product overview 8

1.1 Included items 8

1.1.1 Standard items 8

1.1.2 Accessories (sold separately) 8

1.2 Part names 9

1.2.1 Front camera (main unit) - front view 9

1.2.2 Front camera (main unit) - rear view 10

1.2.3 Rear camera (optional) 10

1.3 Removing and inserting the memory card 11

2. Installing the product 12

2.1 Installing the front camera (main unit) 12

2.1.1 Selecting an installation location 12

2.1.2 Securing the product 12

2.1.3 Connecting the power cable 14

2.2 Installing the rear camera (optional) 17

2.2.1 Selecting an installation location 17

2.2.2 Securing the rear camera 17

2.2.3 Connecting the rear camera cable 18

3. Using recording features 19

3.1 Turning the product on or off 19

3.2 Learning about the file storage locations 19

3.3 Using the continuous recording feature 19

3.4 Recording manually 20

3.5 Using the SOS recording feature 20

3.6 Using parking mode 21

3.7 Using the Super night vision feature 23

3.8 Using the road safety features 23

4. Using the mobile viewer 24

4.1 Connect the product to a smartphone 24

4.2 Viewing the mobile viewer screen layout 24

5. Using THINKWARE CONNECTED 25

5.1 Connecting the product to THINKWARE CONNECTED 25

6. Using the PC viewer 26

6.1 System requirements 26

6.2 Learning about the PC viewer 26

6.2.1 Installing the PC viewer 26

6.2.2 PC viewer screen layout (for Windows) 27

6.2.3 Playing recorded videos on the PC viewer (for Windows) 28

6.2.4 PC viewer screen layout (for Mac) 29

6.2.5 Playing recorded videos on the PC viewer (for Mac) 30

7. Settings 31

7.1 Managing the memory card 31

7.2 Setting the Camera 31

7.3 Setting recording features 32

7.4 Setting road safety features 33

7.5 Configuring the system settings 33

8. Accessing the product information 34

8.1 Viewing the product information 34

8.2 Accessing and configuring the GPS 34

9. Upgrading the firmware 35

10. Troubleshooting 36

11. Specifications 37

Safety information

Read the following safety information to properly use the product.

Safety symbols in this guide

"Warning" - Indicates a potential hazard which, if not avoided, may result in injury or death.

"Caution" - Indicates a potential hazard which, if not avoided, may result in minor injury or property damage.

"Note" - Provides useful information to help users better utilize the product's features.

Safety information for proper use

Driving and product operation

- **Do not operate the product while driving a vehicle.** Distraction while driving may cause accidents and result in injury or death.
- **Install the product in places where the driver's view is not obstructed.** Obstruction of the driver's vision may cause accidents and result in injury or death. Check with your state and municipal laws before mounting the product to the windshield.

Power supply

- **Do not operate or handle the power cable with wet hands.** Doing so may result in electrocution.
- **Do not use damaged power cables.** Doing so may result in electrical fire or electrocution.
- **Keep the power cable away from all heat sources.** Failure to do so may cause the power cord insulation to melt, resulting in electrical fire or electrocution.
- **Use the power cable with the correct connector and make sure the power cable is connected securely and is firmly in place.** Failure to do so may result in electrical fire or electrocution.
- **Do not modify or cut the power cable.** Also, do not place heavy objects on the power cable or pull, insert, or bend the power cable using excessive force. Doing so may result in electrical fire or electrocution.

- **Use only genuine accessories from THINKWARE or an authorized THINKWARE dealer.** THINKWARE does not guarantee compatibility and normal operation of third-party accessories.
- **When connecting the power cable to the product, ensure that the connection between the cable plug and the power cable connector on the product is secure.** If the connection is loose, the power cable may become disconnected due to vehicle vibration. Video recording is not available if the power connector is disconnected.

Children and pets

Ensure that the product is out of the reach of children and pets. If the product breaks, it may result in fatal damage.

Other information about the product

Product management and operation

- **Do not separate the product and the mount when the product is turned on.** Doing so may result in product malfunction.
- **Do not expose the product to direct sunlight or intense light.** The lens or internal circuitry may fail otherwise.
- **Use the product at a temperature between 14°F and 140°F (-10°C to 60°C) and store the product at a temperature between -4°F and 158°F (-20°C to 70°C).** The product may not function as designed and some permanent physical damages may result if it is operated or stored out of the specified temperature ranges. Such damages are not covered by the warranty.
- **Frequently check the product for the proper installation position.** Impact caused by extreme road conditions may alter the installation position. Ensure that the product is positioned as instructed in this guide.
- **Do not apply excessive force when pressing the buttons.** Doing so may damage the buttons.
- **Do not use chemical cleaners or solvents to clean the product.** Doing so may damage plastic components of the product. Clean the product using a clean, soft, and dry fabric.
- **Do not disassemble the product or subject the product to impact.** Doing so may damage the product. Unauthorized disassembly of the product voids the product warranty.
- **Handle with care.** If you drop, mishandle, or expose the product to external shocks, it may cause damage and/or result in the malfunction of the product.
- **Do not attempt to insert foreign objects into the device.** Doing so may damage the product.
- **Avoid excessive humidity and do not allow any water to enter the product.** Electronic components inside the product may fail if exposed to humidity or water.

- Depending on the make and model of your car, the power may be constantly supplied to the dash cam even when the ignition is turned off. Installation of the device to a continuously powered 12V outlet could result in vehicle battery drainage.
- This device is designed to record video while the vehicle is in operation. The quality of the video might be affected by weather conditions and the road environment, such as whether it is day or night, presence of street lighting, entering/exiting tunnels, and the surrounding temperature.
- THINKWARE is NOT responsible for the loss of any recorded video during operation.
- Although the device was designed to withstand high-impact car collisions, THINKWARE does not guarantee the recording of accidents when the device is damaged as a result of the accident.
- Keep the windshield and camera lens clean for optimal video quality. Particles and substances on the camera lens or windshield may reduce the quality of the recorded videos.
- This device is intended to be used inside the vehicle only.

1. Product overview

1.1 Included items

Ensure that all the items are included when you open the product box.

1.1.1 Standard items

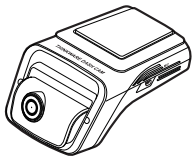

Front camera (main unit)

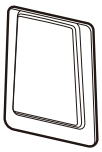

Mount

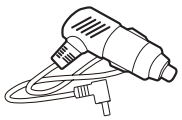

Car charger

Hardwiring cable

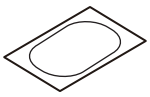

Heat Blocking Film

Adhesive cable holder

MicroSD memory card with adapter (consumable)

Warranty / CS & CE information

CPL filter

The standard items may change without prior notice.

1.1.2 Accessories (sold separately)

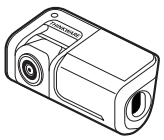

Rear camera

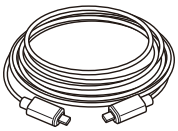

Rear camera cable

1.2 Part names

1.2.1 Front camera (main unit) - front view

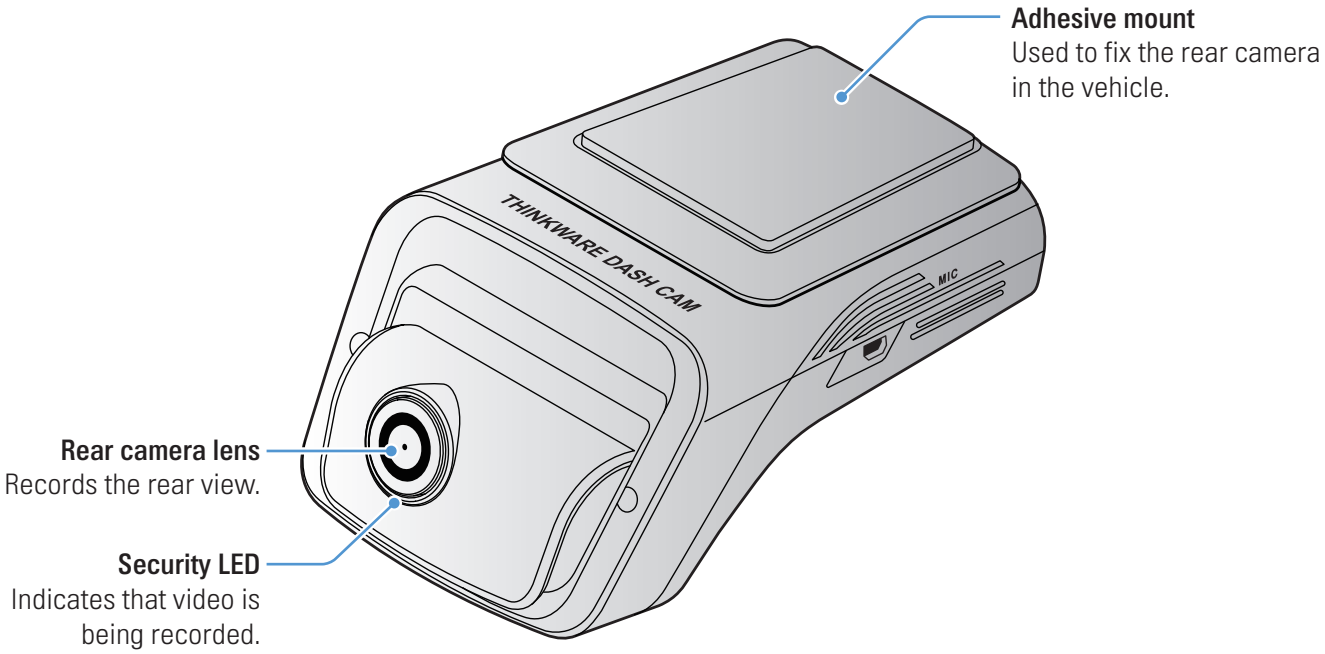

- To reset the product, press and hold the voice recording ( ) and manual recording (**REC**) buttons simultaneously until you hear beeps.
- Refer to the following table to check the status of the product using the LED indicators.

LED	LED STATUS	Operation description
Front Security LED	(light on)	The product is turned on.
Connection LED	(light on)	Bluetooth connected
	(flickers)	Bluetooth pairing
	(light on)	Wi-Fi connected
	(flickers)	Internet Mode pairing (not connected)
	(light on)	Internet Mode connected
	(flickers quickly)	SOS recording
	(flickers)	Bluetooth/Wi-Fi reset
REC LED	(light on)	Continuous Recording/Parking Recording (Time Lapse)
	(flickers)	Manual recording/Event recording/Parking recording (Motion Detection)
	OFF	Parking recording (Energy Saving)
	(flickers quickly)	SOS recording
GPS LED	(light on)	GPS activated

1.2.2 Front camera (main unit) - rear view

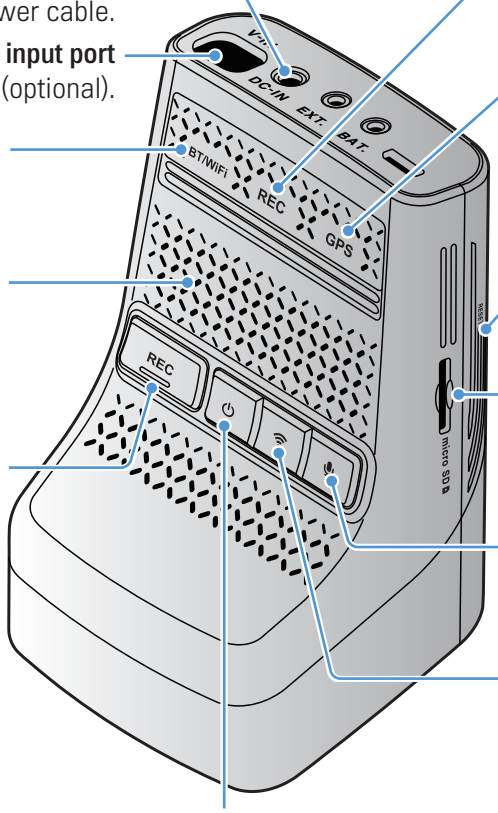

DC-IN power port
Used to connect the power cable.

V-IN input port
Used to connect the rear camera (optional).

Connection LED
Indicates the Wi-Fi and Bluetooth connection status.

Speaker
Outputs the voice guide and buzzer sounds to indicate the product's status.

Manual recording button
• Press to start manual recording.
• Press and hold for 3 seconds for SOS recording.

REC LED
Indicates the recording status.

GPS LED
Indicates the GPS connection status.

Reset button
Insert the tip of a sharp object to reset the product when an error occurs.

Memory card slot
Insert a memory card to save recordings.

Voice recording button
Press to enable or disable voice recording.

Connection button
Press to connect the product to a smartphone via Bluetooth or Wi-Fi network.

Power button
• Press and hold to turn off the product.
• Press to turn on the product.

1.2.3 Rear camera (optional)

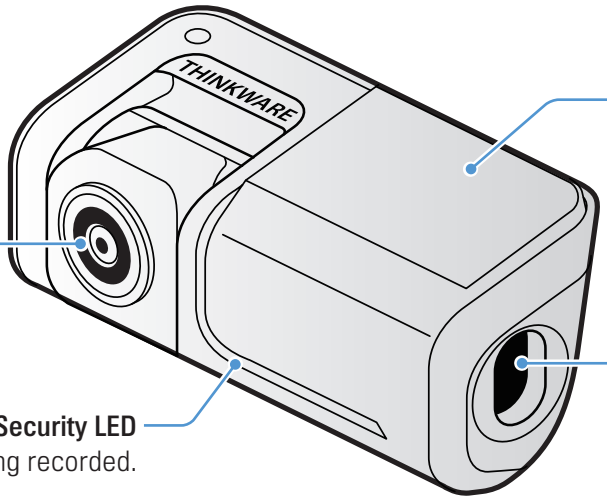

Adhesive mount
Used to fix the rear camera in the vehicle.

Rear camera lens
Records the rear view.

Connection port
Used to connect the rear camera to the front camera using a rear camera cable.

Security LED
Indicates that video is being recorded.

Depending on the laws and regulations of the country, the security LED specifications may be different.

1.3 Removing and inserting the memory card

Follow the instructions to remove the memory card from the product or to insert the memory card into the product.

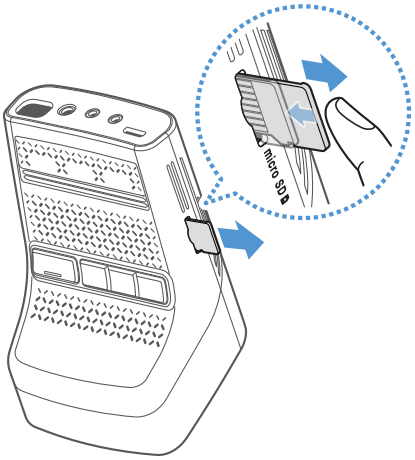

Before removing the memory card, ensure that the product is turned off. Gently push the bottom of the memory card with your fingernail to release it, and then remove it from the product.

To insert the memory card into the memory card slot, ensure that the metal contacts on the memory card are facing toward the product's buttons, and insert it into the slot until you hear a click.

- Ensure that the product is turned off before removing the memory card. The recorded video files may be corrupted or lost if you remove the memory card while the product is on.
- Ensure that the memory card is in the correct direction before inserting it into the product. The memory card slot or the memory card may be damaged if it is inserted incorrectly.
- Use only authentic memory cards from THINKWARE. THINKWARE does not guarantee the compatibility and normal operation of third-party memory cards.

To prevent loss of recorded video files, periodically back up the video files on a separate storage device.

2. Installing the product

2.1 Installing the front camera (main unit)

Follow the instructions to properly install the product.

2.1.1 Selecting an installation location

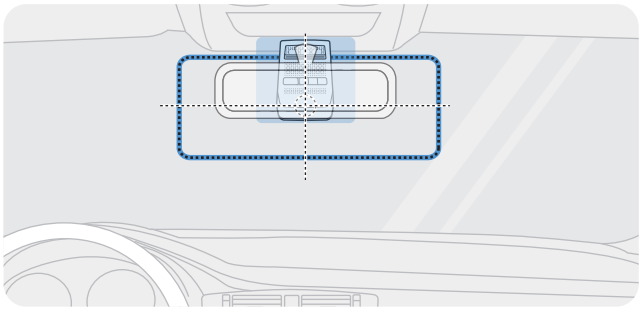

Select an installation location that can record the entire view in front of the vehicle without obstructing the driver's vision. Ensure that the front camera lens is located in the center of the windshield.

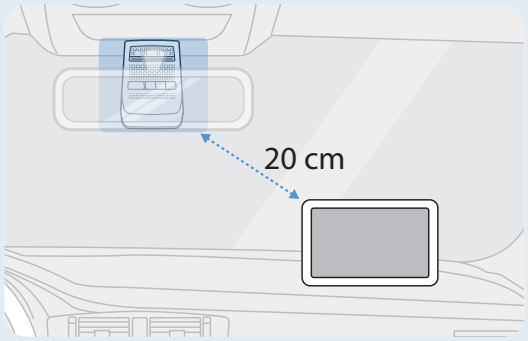

If a GPS navigating device is installed on the dashboard, its GPS reception may be affected depending on the dashboard camera's installation location.
Adjust the installation location of the GPS navigating device to ensure that the two devices are separated by at least 20 centimeters (approximately 8 inches).

2.1.2 Securing the product

Follow the instructions to secure the product at the installation location.

1 After determining the installation location, wipe the installation location on the windshield with a dry cloth.

2 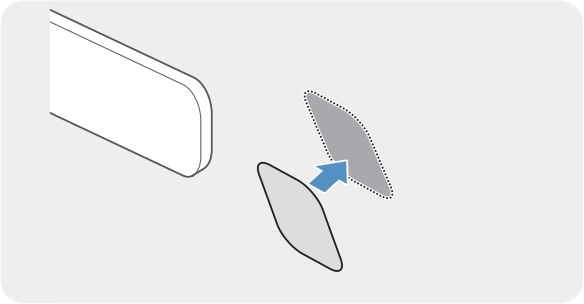

Attach the heat blocking film to the installation location.

Attach the heat blocking film where the front camera will not be blocked.

3

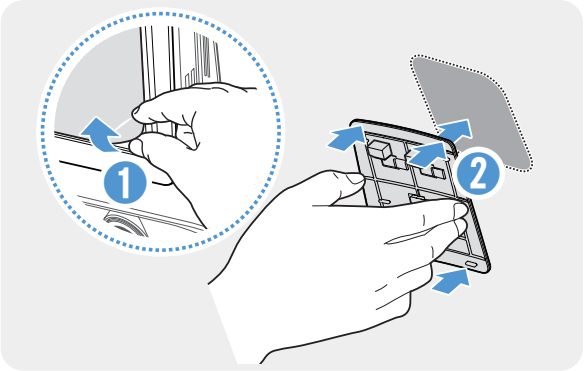

Remove the protective film from the adhesive mount, and then press the mount to the heat blocking film. Push the mount against the windshield to ensure that the mount is firmly fixed.

4

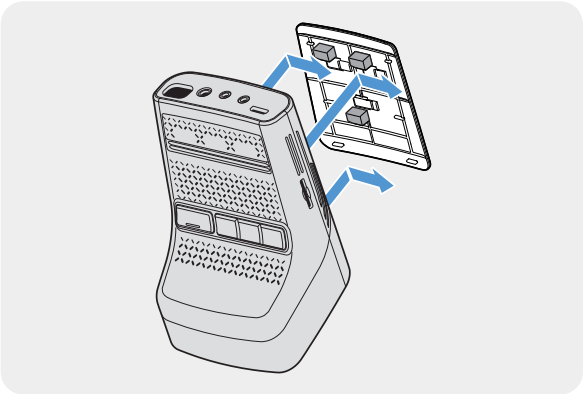

Align the product to the mount, and then slide it into the locking position until you hear a click.

- The product may fall and be damaged during vehicle operation if it is not firmly fixed to the mount.
- If you need to remove the mount from the windshield to alter the installation location, be careful not to damage the windshield's film coat.

5

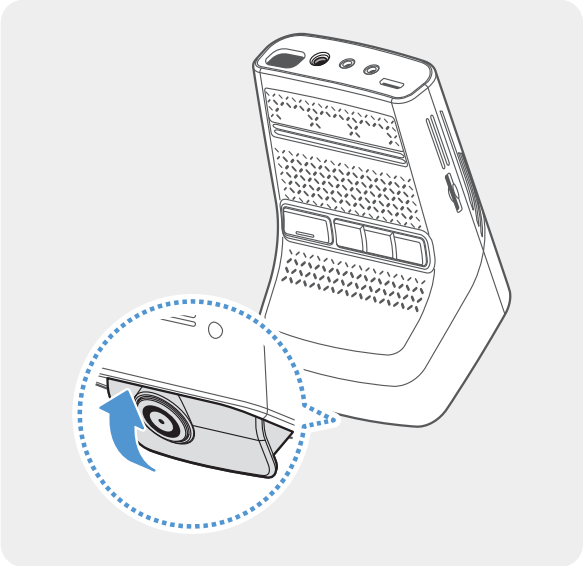

Set the vertical angle of the camera appropriately.

To confirm the camera angle, record a video after installation and check the video using the mobile viewer or the PC viewer. If necessary, adjust the camera angle again. For more information about the mobile viewer or the PC viewer, refer to "4. Using the mobile viewer" on page 24 or "6. Using the PC viewer" on page 26.

2.1.3 Connecting the power cable

When the engine and electrical accessories are turned off, connect the continuous power cable or the cigar socket power cable to the product.

Connecting the car charger

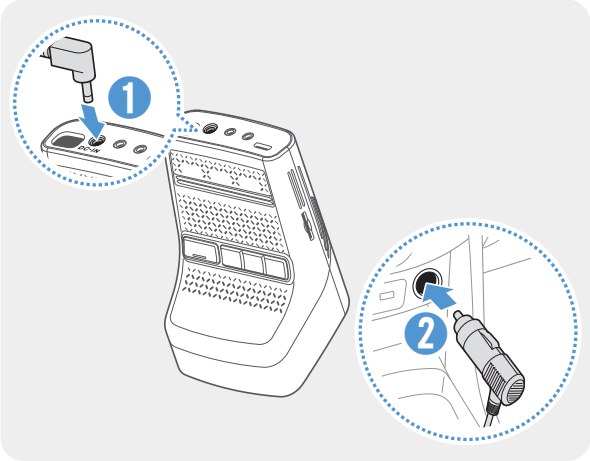

Connect the car charger to the product's DC-IN power port and insert the cigar jack into the vehicle's power socket.

The location and specifications of the power socket may differ by vehicle make and model.

- Use the authentic THINKWARE car charger. Use of third party power cables may damage the product and result in electrical fire or electrocution due to the voltage difference.
- Do not cut or modify the power cable yourself. Doing so may damage the product or the vehicle.
- For safe driving, arrange the cables to prevent the driver's vision from being obstructed or interfering with driving. For more information about arranging cables, visit www.thinkware.com.

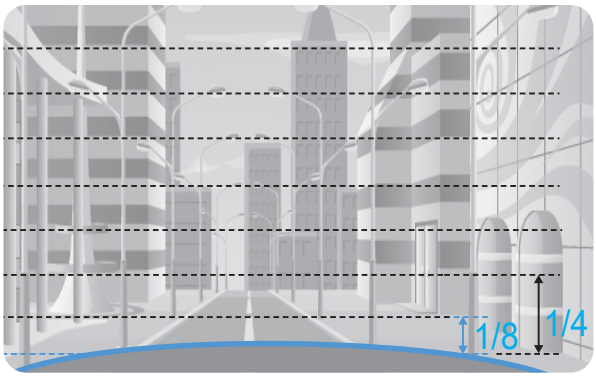

Connect the product to **THINKWARE DASH CAM LINK** on your smartphone and adjust the camera angle so that the hood of the vehicle covers 1/4 - 1/8 of the screen while viewing the live view screen, as shown in the image to the left.

For more information about connecting and using the **THINKWARE DASH CAM LINK**, refer to "4. Using the mobile viewer" on page 24.

Connecting the continuous hardwiring cable

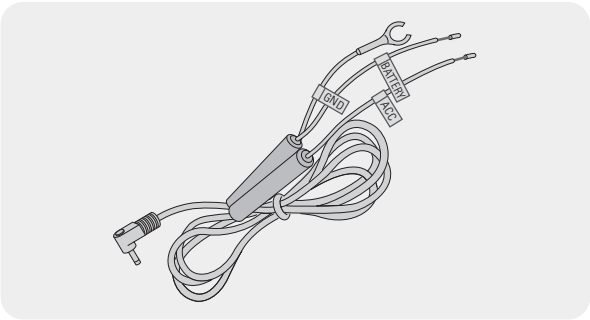

If you connect the product to the vehicle via the continuous power cable, the camera continues operating even when the vehicle is not operating (parking mode). In parking mode, the camera detects impacts to the vehicle and nearby motion and records video.

For more information about parking mode, refer to "3.6 Using parking mode" on page 21.

- The continuous power cable must be professionally installed in the vehicle by a trained mechanic. Contact an authorized service center to connect the continuous power cable to the vehicle. If the product is not installed properly, the product may be damaged or an electrical fire or electrocution may occur.
- Use the authentic THINKWARE continuous power cable only. Using other manufacturer's cable may damage the product or cause electrocution due to the voltage difference.
- When connecting the continuous power cable, pay special attention to wiring. If the wires are connected incorrectly, the product or the vehicle may be damaged.

1

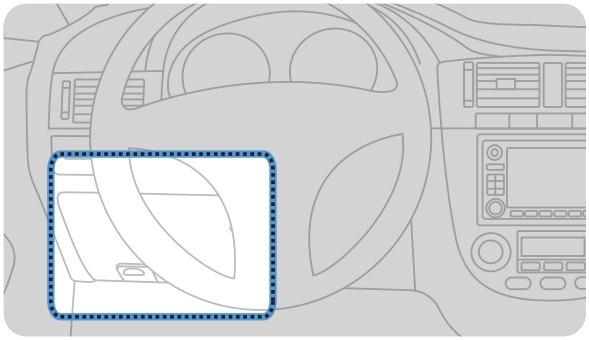

Find the vehicle's fuse box. Usually the fuse box is installed under the driver's seat.

The location of the fuse box may differ depending on the make and model of the vehicle. For more information, refer to your vehicle's owner's manual.

2

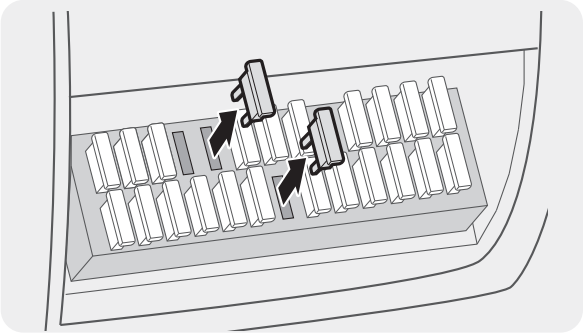

Open the fuse box, find the continuous power terminal (which supplies power when the vehicle is off) and the ACC terminal (which supplies power when the ignition status is "ACC ON") by using an electrical tester, and detach the fuses from the terminals.

3

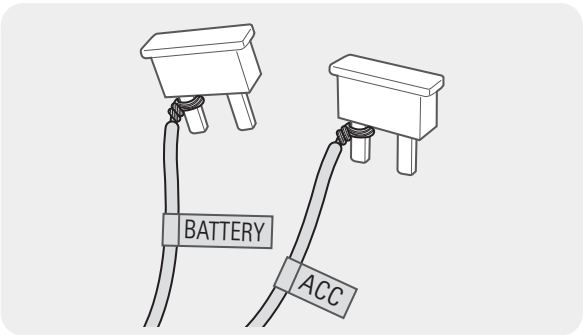

Connect the BATTERY wire to a fuse leg of the continuous power terminal and connect the ACC wire to a fuse leg of the normal (ACC) terminal.

4 Check the fuse panel's input and output contact points by using an electrical tester.

5 Place the fuses back into their locations on the fuse panel, connecting each fuse leg with the wire to the output contact point and taking care not to change the fuse position.

When you install the fuses on the fuse panel, the fuse legs for the BATTERY wire and the ACC wire must be connected to the output terminals respectively. If the fuse leg with the wire is connected to an input terminal, the product or vehicle may be damaged or electrical fire may result.

6

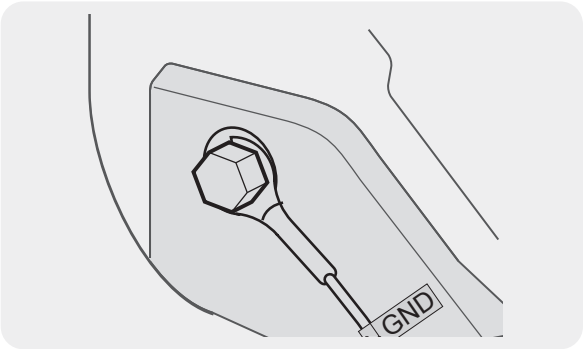

Connect the ground wire (the GND wire) to a bolt attached to a metallic part of the vehicle's body.

Normally, the metallic bolt that you can connect the ground wire to (the GND wire) is fitted nearby fuse box or the driver seat's door interior.

7 Connect the continuous power cable to the product's DC-IN power connector and start the engine to make sure the product operates normally.

Once the product is powered on, the LED indicator and the voice guidance are turned on.

8 Install the **THINKWARE DASH CAM LINK** on your smartphone via the Google Play Store or the Apple App Store.

For more information about connecting and using the **THINKWARE DASH CAM LINK**, refer to "4. Using the mobile viewer" on page 24.

9 Adjust the camera angle so that the hood of the vehicle covers 1/4 - 1/8 of the screen while viewing the live view on the LCD screen.

For more information about adjusting angle, refer to "Connecting the car charger" on page 14.

2.2 Installing the rear camera (optional)

Refer to the following instructions to properly install the rear camera.

2.2.1 Selecting an installation location

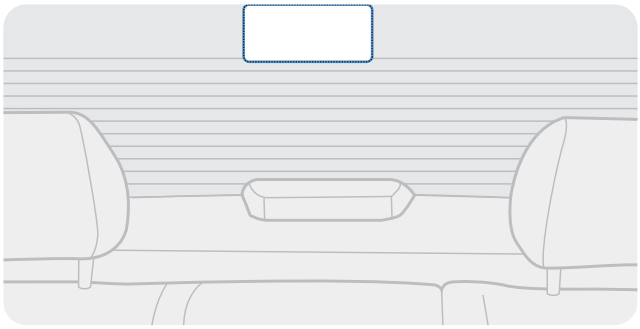

Select a location on the rear windshield where there is no defrost grid wire and the camera can record the entire rear view.

- For vehicles with a sunshade attached to the rear windshield, you must select a location where using the sunshade will not interfere with camera operation.
- The adhesive part of the rear camera should not touch the defrost grid.

2.2.2 Securing the rear camera

Refer to the following instructions to secure the product to the installation location.

1 After determining the installation location, wipe the installation surface of the windshield with a dry cloth.

Check the installation location before you secure the rear camera to the rear windshield. After securing the rear camera to the windshield, it is hard to remove the camera or change the installation location due to the strong adhesive.

2

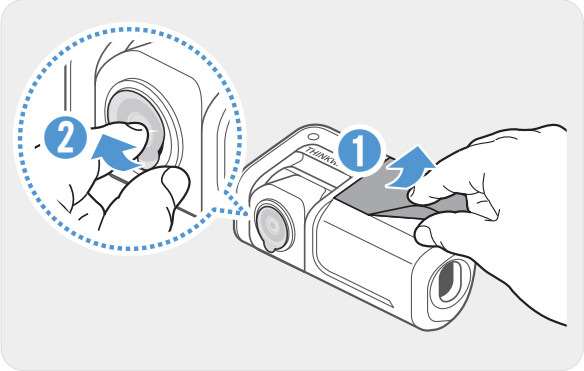

Remove the protective film from the adhesive mount and camera lens.

3

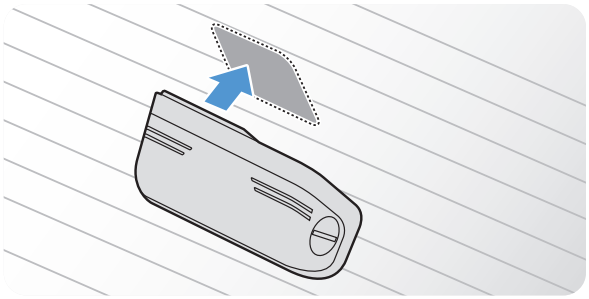

Attach the product and press the adhesive tape firmly to secure the camera.

If the product is fixed in reverse, the rear view will be recorded upside down.

4

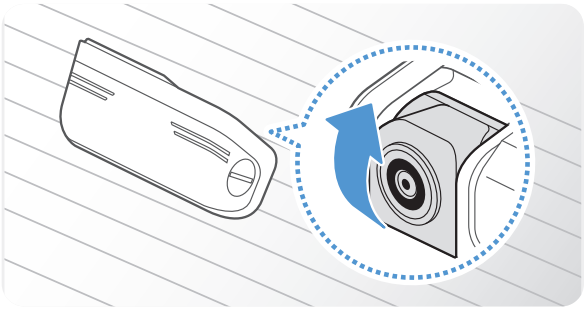

Adjust the camera's vertical angle.

2.2.3 Connecting the rear camera cable

Power off the product and connect the rear camera cable to the front camera (main unit).

1

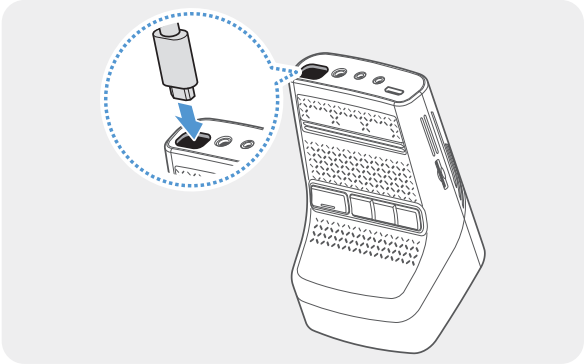

Connect one end of the rear camera cable to the front camera's V-IN port.

2

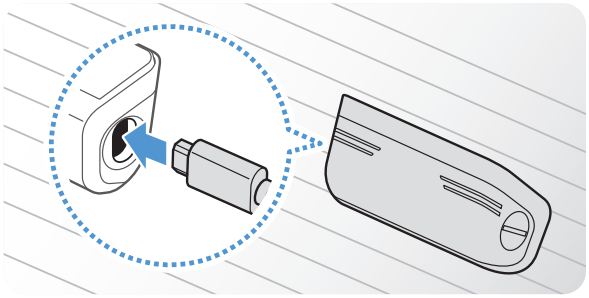

Connect the other end of the rear camera cable to the rear camera's connection port.

For safe driving, arrange the cables to prevent the driver's vision from being obstructed or interfering with driving.

3 Turn on the ACC or start the engine to check if the product is powered on. After the product is powered on, the voice guidance will be turned on.

The product is powered on when the ACC mode is turned on or when the engine starts.

3. Using recording features

3.1 Turning the product on or off

The product is turned on automatically and continuous recording starts when you turn on the ACC or start the engine.

Wait until the product is completely booted up after turning it on, and then begin operating the vehicle. The video recording does not begin until the product is completely turned on (booted up).

3.2 Learning about the file storage locations

Videos are stored in the following folders according to their recording mode.

On the mobile viewer	Continuous	Continuous Incident	Manual Recording	Motion Detection	Parking Incident	SOS Recording
In the memory card	cont_rec	evt_rec	manual_rec	motion_ timelapse_rec	parking_rec	sos_rec

Play videos on Window/Mac computers or using the **THINKWARE DASH CAM LINK**. If you play videos by inserting the memory card in devices such as a smartphone or a tablet PC, the video files may be lost.

A file name is composed of the recording start date and time, and the recording option.

YYYY_MM_DD HH_MM_SS

REC_2022_07_01_10_25_30_F.MP4

REC_2022_07_01_10_25_30_R.MP4

Recording conditions

- F: Front camera
- R: Rear camera (when optional rear camera is equipped)

3.3 Using the continuous recording feature

Connect the power cable to the product's DC-IN power port and then turn on the vehicle's electrical accessories or start the engine. The voice guide will indicate that continuous recording has started.

During continuous recording, the product operates as follows.

Mode	Operation description	REC LED
Continuous recording	During driving, videos are recorded in 1 minute segments and stored in the **"cont_rec"** folder.	(light on)
Incident continuous recording*	When an impact to the vehicle is detected, a video is recorded for 20 seconds (from 10 seconds before the detection to 10 seconds after the detection) and stored in the **"evt_rec"** folder.	(flickers)

* When an impact to the vehicle is detected during continuous recording, incident continuous recording starts with a double beep sound.

- Wait until the product is completely booted up after turning it on, and then begin operating the vehicle. The video recording does not begin until the product is completely turned on (booted up).
- When incident continuous recording starts, a double "beep" sounds as a notification.
- To enable recording, you must insert a memory card into the product.

3.4 Recording manually

You can record a scene you want to capture while driving and store it as a separate file.

To start manual recording, press the manual REC button. Then, the voice guide will indicate that manual recording has started.

During manual recording, the product operates as follows.

Mode	Operation description	REC LED
Manual recording	When you press the manual recording (**REC**) button, a video will be recorded for 1 minute (from 10 seconds before to 50 seconds after pressing the button) and stored in the **"manual_rec"** folder.	(flickers)

3.5 Using the SOS recording feature

You can record a scene when an accident occurs while driving and store it as a separate file.

To start SOS recording, press the REC button for 3 seconds. During SOS recording, the product operates as follows.

Mode	Operation description	Connection LED/ REC LED
SOS recording	If you press the REC button for 3 seconds when an accident occurs, a video will be recorded for 10 seconds (from 5 seconds before the accident to 5 seconds after pressing the button) and stored in the **"sos_rec"** folder.	(flickers quickly)

- To use this feature, you must sign in to the **THINKWARE CONNECTED** application.
- The video will be uploaded to the **THINKWARE CONNECTED** application with the location where the accident occurred.

3.6 Using parking mode

When the product is connected to the vehicle via the hardwiring cable, the operating mode is switched to parking mode after the engine or electrical accessories are turned off and the voice guide will indicate that the parking mode has started.

- Parking mode operates only when the hardwiring cable is connected. The hardwiring cable must be professionally installed to the vehicle by a trained mechanic.
- To use all recording modes, you must insert a memory card into the product.
- Depending on the battery charging status of the vehicle, the duration of parking mode may differ. If you want to use parking mode for an extended period, check the battery level to prevent battery depletion.

If you do not want to use parking mode or you want to change the mode settings, from the mobile viewer, tap **Dash Cam Settings > Record Settings**.

Refer to the following table to set the **Parking Mode** options.

Option		Operation description	REC LED
Motion Detection	No motion or impact detected	Monitors movement in the area or impacts to the vehicle. Video will be recorded only when motion or an impact is detected.	(flickers)
	Motion detected	When a moving object is detected while parking, a video is recorded for 20 seconds (from 10 seconds before detection to 10 seconds after detection) and stored in the **"motion_timelapse_rec"** folder.	(flickers)
	Impact detected	When an impact is detected while parking, a video is recorded for 20 seconds (from the moment 10 seconds before detection to 10 seconds after detection) and stored in the **"parking_rec"** folder.	(flickers)
Time Lapse	No impact detected	A video is recorded at a rate of 2 fps for 10 minutes, compressed into a 2-minute long file, and stored in the **"motion_timelapse_rec"** folder. Since the video file recorded with this option is small, you can record a long video.	(light on)
	Impact detected	When an impact is detected while parking, a video is recorded for 100 seconds at a rate of 2 fps (from the moment 50 seconds before detection to 50 seconds after detection) and stored in the **"parking_rec"** folder after being compressed into a 20-second long file. (The buzzer will sound.)	(flickers)

Option		Operation description	REC LED
Energy Saving	No impact detected	Monitors impacts to the vehicle. Video will be recorded only when an impact is detected.	OFF
	Impact detected	When an impact is detected while parking, a video is recorded for 20 seconds (from within 1 second after detection) and stored in the **"parking_rec"** folder. • When the RADAR on the dash cam detects an object in the radar area, Energy Saving is switched off and the impact detection is set for 30 seconds. (If there is no impact detected, the product does not store the recording and switches back to Energy Saving.) • If an object and impact are detected in the radar area, a video is recorded for 20 seconds and stored in the **"parking_rec"** folder. (The buzzer will sound.) When the recording ends, the product switches back to Energy Saving.	(flickers)
OFF		The product is powered off when electric accessories and the engine are turned off.	OFF

If parking mode settings are changed, the videos recorded with the previous settings will be deleted. To prevent data loss, back up all parking mode videos before changing parking mode settings.

You cannot use Motion Detection, Time Lapse, or Energy Saving at the same time.

3.7 Using the Super night vision feature

With the Super Night Vision feature, you can record videos that are much brighter than videos recorded without this feature. This feature is enabled by real-time image signal processing (ISP) to improve the brightness of videos recorded.

〈When Super Night Vision is deactivated〉

〈When Super Night Vision is activated〉

1 From the mobile viewer, tap **Dash Cam Settings > Record Settings**.

2 From **Super Night Vision**, select the desired recording mode to use the Super Night Vision feature. The new setting is applied automatically.

3.8 Using the road safety features

The road safety features include a safety camera alert system, a lane departure warning system (LDWS), a lane departure warning system speed (LDWS Speed), a forward-collision warning system (FCWS), a low speed Forward collision warning system (low-speed FCWS), and a front vehicle departure warning (FVDW).

Safety feature	Description
LDWS (Lane Departure Warning)	Detects the lane departure via the real-time video and warns the driver.
LDWS Speed	Detects lane departure and warns the driver when the speed of the vehicle goes over the speed selected in the settings.
FCWS (Forward Collision Warning)	Detects forward collision threats via the real-time video and warns the driver when the vehicle is moving at 40 km/h or above.
Low Speed FCWS	Detects forward collision threats via real-time video and warns the driver when the vehicle is moving at 10-30 km/h.
FVDW (Front Vehicle Departure Warning)	Detects the departure of another vehicle that was previously stationary in front of the vehicle and notifies the driver after four seconds.
RCWS (Rear Collision Warning)	Detects rear collision threats via the real-time video and warns the driver when the vehicle is moving at 40 km/h or above.

Road safety features are performed differently depending on the set speed and sensitivity of the features.

4. Using the mobile viewer

You can view and manage recorded videos and configure various product features on your smartphone.

One of the following environments is required to use the **THINKWARE DASH CAM LINK** application:

- Android 7.0 (Nougat) or higher
- iOS 13 or higher

4.1 Connect the product to a smartphone

1 On your smartphone, open the Google Play Store or Apple App Store and download and install **THINKWARE DASH CAM LINK**.

2 Run **THINKWARE DASH CAM LINK**.

3 Tap **Dash cam connection is required.** at the bottom of the screen and follow the on-screen instructions to connect the product to a smartphone.

4.2 Viewing the mobile viewer screen layout

The following provides brief information about the mobile viewer's screen layout.

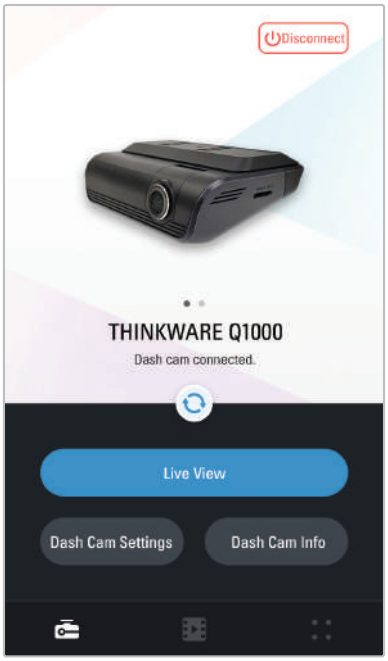

5. Using THINKWARE CONNECTED

You can view and manage recorded videos and configure various product features on your smartphone.

- One of the following environments is required to use the THINKWARE CONNECTED application:
  - Android 7.0 (Nougat) or higher
  - iOS 11.4 or higher
- The services and features provided by **THINKWARE CONNECTED** application may be changed according to the service policy. Refer to the THINKWARE website (https://www.thinkware.com) for more information.

- Status of the vehicle while driving/parking
- Vehicle battery voltage status
- Dash cam power off
- Driving history
- SOS notification, recorded video backup, and SMS transmission
- Driving impact notification, video backup, and SMS transmission
- Parking impact notification and recorded video backup
- Download and share the event location and recorded video
- The captured image of the front camera during the most recent parking
- Real-time vehicle location
- Remote live view

5.1 Connecting the product to THINKWARE CONNECTED

1 On your smartphone, open the Google Play Store or Apple App Store and download and install **THINKWARE CONNECTED**.

2 Run **THINKWARE CONNECTED** and tap **Sign In** on your smartphone.

You need a THINKWARE ID to use **THINKWARE CONNECTED**. If you don't have an ID, tap **Sign Up** and sign up for a THINKWARE membership.

3 After you sign in, follow the app's instructions. Tap **Register a Device**, and enter a barcode number to register a product.

6. Using the PC viewer

You can view and manage the recorded videos and configure various product features on your PC.

6.1 System requirements

The following are the system requirements for running the PC viewer.

- Processor: Intel Core i5, or higher
- Memory: 4 GB or more
- Operating system: Windows 7 or later (64-bit is recommended), Mac OS X 10.10 or later
- Other: DirectX 9.0 or higher / Microsoft Explorer version 7.0 or higher

The PC viewer will not operate properly on PC systems running an operating system other than those listed in the system requirements.

6.2 Learning about the PC viewer

6.2.1 Installing the PC viewer

You can download the latest PC viewer software from the THINKWARE website (https://www.thinkware.com/Support/Download).

The PC viewer installation file (setup.exe) is stored in the root folder of the memory card that is provided with the product. Follow the instructions to install the PC viewer on your PC.

1. Insert the memory card into a memory card reader connected to your PC.

2. Move the installation file to the desktop, run it, and complete the installation according to the instructions given in the installation wizard.
   After the installation is complete, there will be a shortcut icon to Thinkware Dashcam Viewer.

6.2.2 PC viewer screen layout (for Windows)

The following provides brief information about the PC viewer's screen layout.

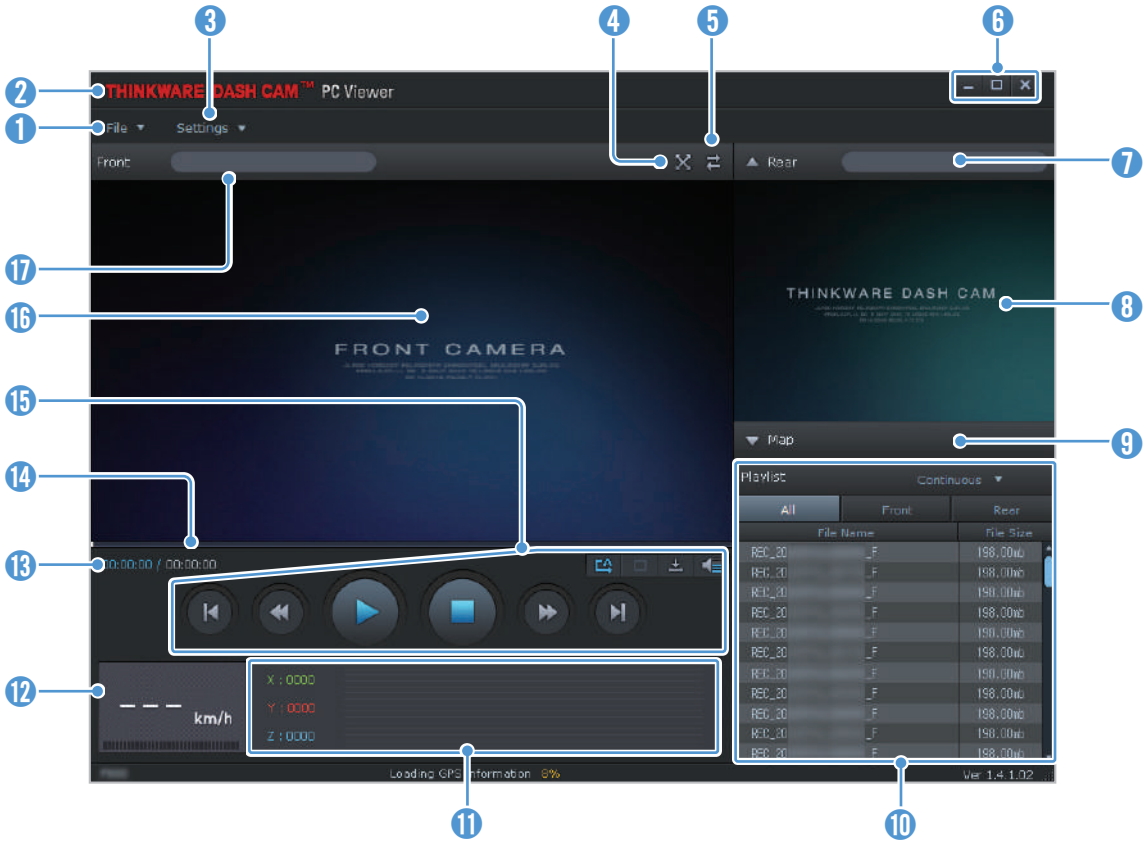

Number	Description
1	Open a file, or save a video with a different name.
2	Visit the THINKWARE website.
3	View or configure the dashcam settings, and set the language for the PC viewer.
4	Display the current video in full screen. Tap the Back ( ) button to return to the previous screen.
5	Switch between the front and rear videos.
6	Minimize, expand, or close the software.
7	Displays the rear camera video file name.
8	Displays the recorded rear camera video.
9	Display the map screen.
10	Displays the playlist.
11	Indicates the G sensor value at the time of recording.
12	Indicates the vehicle's driving speed at the time of recording.
13	Displays the current and total running time of the current video.
14	Displays the progress of video playback.
15	Play or control a video.
16	Displays the recorded front camera video.
17	Displays the front camera video file name.

6.2.3 Playing recorded videos on the PC viewer (for Windows)

Follow the instructions to play recorded videos.

1 Turn off the product and remove the memory card.

2 Insert the memory card into a memory card reader connected to your PC.

3 Double-click the shortcut to the PC viewer ( ) to open the program. The video files in the memory card will be automatically added to the playlist in the bottom-right corner of the PC viewer screen. The playlist section layout is as follows.

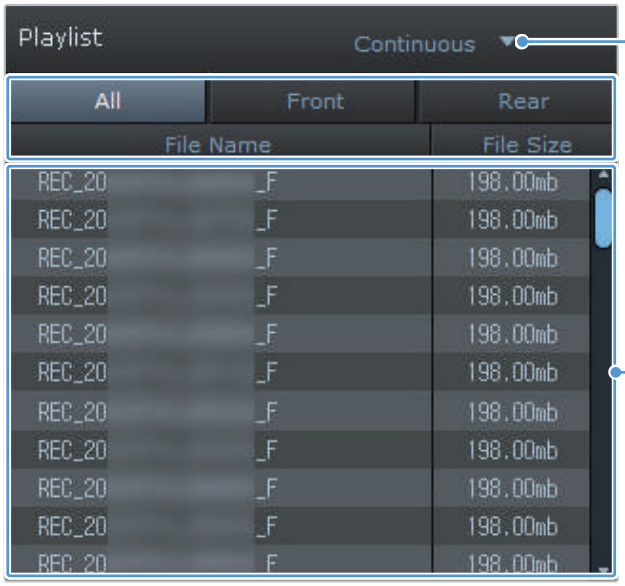

Select a folder.

Displays a list of videos in the selected folder.

4 Double-click a video file after selecting a video folder, or click the Play (▶) button after selecting a video file. The selected video file will be played.

If the video files on the memory card are not automatically added to the playlist when you run the PC viewer, click **File▼ > Open**, select the removable storage device for the memory card, and click **Confirm**.

6.2.4 PC viewer screen layout (for Mac)

The following provides brief information about the PC viewer's screen layout.

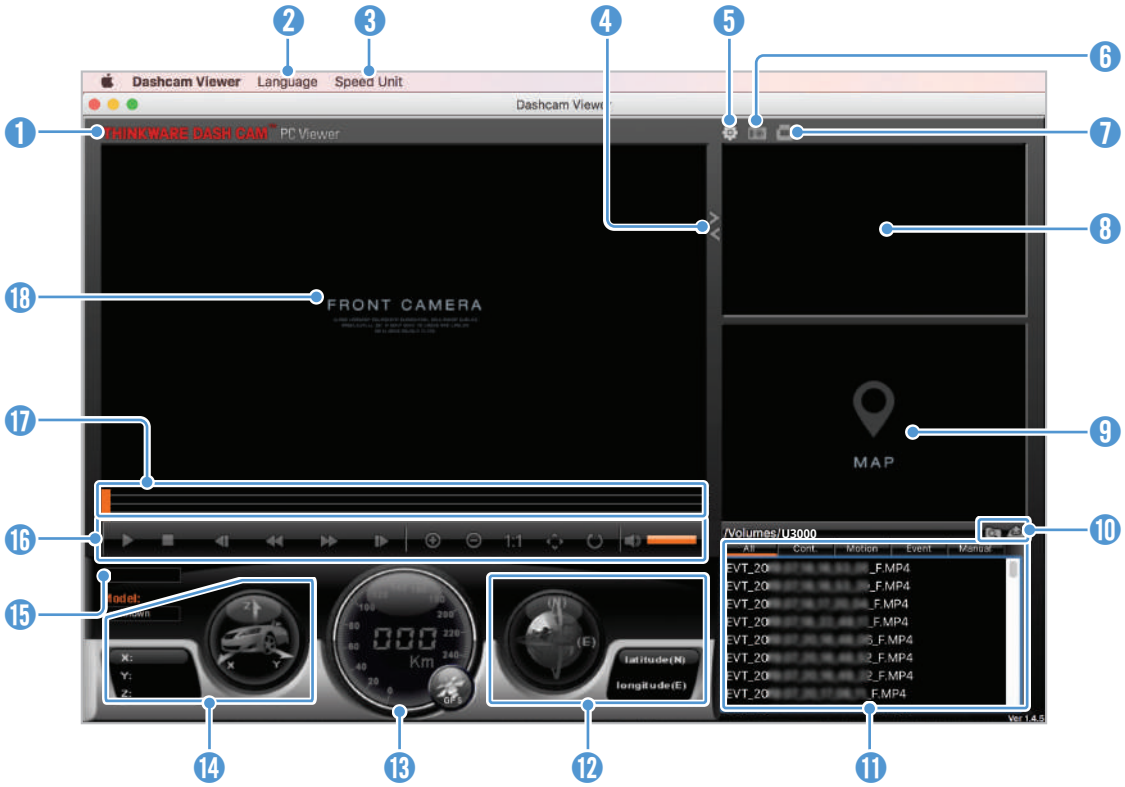

Number	Description
1	Visit the THINKWARE website.
2	Set the language for the PC viewer.
3	Set the speed unit.
4	Switch between the front and rear videos.
5	View or configure the dashcam settings.
6	Save the current scene.
7	Print the current scene.
8	Displays the recorded rear camera video.
9	Displays the map screen.
10	Open a file, or save a video with a different name.
11	Displays the playlist.
12	Displays the GPS information at the time of recording.
13	Indicates the vehicle's driving speed at the time of recording.
14	Indicates the G sensor value at the time of recording.
15	Displays the current and total running time of the current video.
16	Play or control a video.
17	Displays the progress of video playback.
18	Displays the recorded front camera video. Right-click this pane to display the current video in full screen.

6.2.5 Playing recorded videos on the PC viewer (for Mac)

Follow the instructions to play recorded videos.

1 Turn off the product and remove the memory card.

2 Insert the memory card into your Mac using a SD card reader or SD card adapter provided.

3 Open the PC viewer.

4 Click and locate the memory card.

The video files in the memory card will be automatically added to the playlist in the bottom-right corner of the PC viewer screen. The playlist section layout is as follows.

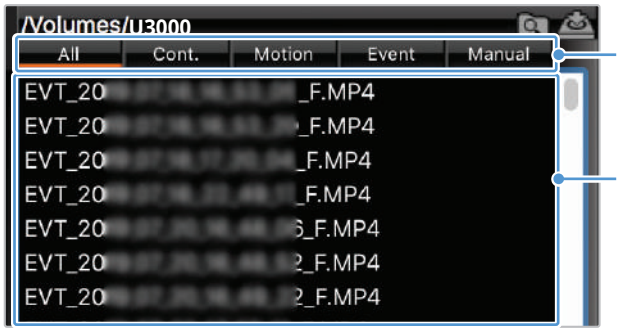

Select a folder.

Displays a list of videos in the selected folder.

5 Double-click a video file after selecting a video folder, or click the Play (▶) button after selecting a video file. The selected video file will be played.

7. Settings

You can set the product features according to your needs and preferences using the mobile viewer or the PC viewer. The following procedures are based on the mobile viewer.

The product will stop recording while configuring settings on the mobile viewer.

7.1 Managing the memory card

From the mobile viewer, tap **Dash Cam settings > Memory Card Settings** to manage the memory card settings.

Options	Description
Memory Partition	Select from **Continuous Priority/Incident Priority/Parking Priority/Manual Priority/ Driving Recording Only** for the memory partition type.
Formatting Memory Card	In **Formatting Memory Card**, tap **Format > Confirm** to proceed with formatting the memory card.
Overwrite Videos	Select the desired modes to allow video overwriting.

7.2 Setting the Camera

From the mobile viewer, tap **Dash Cam settings > Camera Settings** to adjust the camera settings.

Options	Description
Resolution	Select from **4K 30 fps + QHD 30 fps/QHD 60 fps + QHD 30 fps** for the desired front/ rear resolution.
Brightness-front	Select from **Dark/Mid/Bright** for the brightness of the front camera.
Brightness-rear	Select from **Dark/Mid/Bright** for the brightness of the rear camera.
Rotate Rear Camera	Select from **Enabled/Disabled** to flip the rear view image upside down.
(Continuous Mode) Super Night Vision 2.0	Select from **Enabled/Disabled** for the Super Night Vision feature.
(Parking Mode) Super Night Vision 2.0	Select from **Enabled/Disabled** for the Super Night Vision feature.

The HDR feature is only available at QHD 30 fps + QHD 30 fps resolution and only supports the front camera.

7.3 Setting recording features

From the mobile viewer, tap **Dash Cam settings > Record Settings** to manage the recording features settings.

Options	Description
Voice Recording	Select from **Enabled/Disabled**.
Set Privacy Recording	You can set the privacy recording feature to delete your recorded files after a set amount of time to protect the privacy of others. Select from **G-Shock only/1min (max. 2min)/3min (max. 4min)/Disabled** for the privacy recording setting. If it is set to G-Shock only mode, then it is not consistently recorded.
Continuous Mode Incident Recording Sensitivity	Select from **Lowest/Low/Mid/High/Disabled** for the sensitivity.
Parking Mode	Select from **Motion Detection/Time Lapse/Energy Saving/RADAR/Disabled** for the parking mode.
Parking Mode Waiting Time	Select from **30 sec./1 min./2 min./3 min./4 min./5 min.** for the parking mode waiting time.
Smart Parking Rec	Select from **Enabled/Disabled** for thermal protection and external battery saving.
Impact Sensitivity in Parking Mode	Select one of the five parking mode sensitivity levels.
Motion Detection Sensitivity	Select one of the five motion detection sensitivity levels.
Radar Sensitivity	Select one of the five radar sensitivity levels for the front/rear camera.
Use External Battery	Select from **Enabled/Disabled**.
Off Timer	Select the desired off time. To turn off the off timer, select **Disabled**.
Battery Protection	Select from **Enabled/Disabled** for the battery protection.
Vehicle Type	Select from **Regular car/Hybrid car/Electric car** for the vehicle type.
Battery Cutoff Voltage	Select from **12V (11.6~13.2V)/24V (23.2-24.6)** for the battery cutoff voltage.
Wintertime Battery Protection	Select the month(s) to apply the battery protection feature.

- To use parking mode, you must install the hardwiring cable. If continuous power is not supplied to the product, the product will stop recording when the vehicle engine is turned off.
- The vehicle battery will not be charged while the vehicle is parked. If you record in parking mode for an extended period, the vehicle's battery may be depleted and you may not be able to start the vehicle.

- For more information about parking mode, refer to "3.6 Using parking mode" on page 21.
- The battery cutoff voltage can be set only when the **Battery Protection** setting is set to **Enabled**.
- If the off voltage value is too low, the product may consume the battery completely depending on the conditions like the vehicle type or temperature.

7.4 Setting road safety features

From the mobile viewer, tap **Dash Cam settings > Road Safety Settings** to manage the road safety features settings.

Options	Description
Safety Cameras	Select from **Enabled/Disabled** for the safety cameras.
Mobile Zone Alert	Select from **Enabled/Disabled** for the mobile zone alert.
Vehicle Type	Select the vehicle type from **Sedan/SUV/Truck (Bus)**.
Initialize ADAS	In **Initialize ADAS**, tap **Initialize > OK** to proceed with initializing.
LDWS (Lane Departure Warning)	Select from **Disabled/Low/Mid/High** for the LDWS sensitivity.
LDWS Speed	Select from **50km/h / 60km/h / 80km/h / 100km/h** for the LDWS detection speed.
FCWS (Forward Collision Warning)	Select from **Disabled/Low/Mid/High** for the sensitivity.
Low Speed FCWS	Select from **Disabled/Low/Mid/High** for the sensitivity.
RCW (Rear Collision Warning)	Select from **Enabled/Disabled** for the RCW feature.
RCWS Speed	Select from **50km/h / 60km/h / 80km/h / 100km/h** for the RDWS detection speed.
Rear Collision Recording	Select from **Enabled/Disabled** for the rear collision recording feature.
FVDW (Front Vehicle Departure Warning)	Select from **Enabled/Disabled** for the FVDW feature.

7.5 Configuring the system settings

From the mobile viewer, tap **Dash Cam Settings > System Settings** to configure the hardware system settings.

Options	Description
Language	Select the desired language.
Volume	Select the desired volume level for each feature (**Safety Cameras/ADAS/System and Others**).
Security LED	Select from **Lateral/Blink/Spread/Disabled** for the security LED.
Rear Camera LED	Select from **Enabled/Disabled** for rear camera LED.
Time Zone	Select the date and time.
Daylight Saving	Select from **Enabled/Disabled** for the daylight saving.
Speed Unit	Select from **km/h/mph** for the speed unit.
Speed Stamp	Select from **Enabled/Disabled** for the speed stamp.
Wi-Fi Frequency Band	Select from **2.4GHz/5GHz** for the Wi-Fi frequency.
Internet	Select from **Enabled/Disabled** for Internet mode.

If you select **0** for the volume level, the voice guidance will be disabled.

8. Accessing the product information

New users may benefit from the basic product information that can be accessed from the Menu screen.

8.1 Viewing the product information

From the mobile viewer, tap **Dash Cam Info** to view product information. The following product information will be displayed on the screen.

- Model Name
- Firmware Ver.
- Safety Camera Ver.
- Micom ver.
- Memory Size
- LOCAL ID
- GPS Info

8.2 Accessing and configuring the GPS

A GPS module is used to include the location data in the recorded videos. From the mobile viewer, tap **Dash Cam Info > GPS Info** to view the GPS features. The connection status, signal strength, time (UTC), vehicle speed, current altitude, and Horizontal Dilution of Precision (HDOP) are displayed on the screen.

Tap to initialize the GPS, and allow it to locate the current position.

Horizontal Dilution of Precision (HDOP)
HDOP is a value that refers to GPS deviation due to satellite positioning.

9. Upgrading the firmware

A firmware upgrade is provided to enhance the product's features, operation or to increase stability. For optimal operation of the product, ensure that you keep the firmware up to date.

Follow the instructions to upgrade the firmware.

1. On your PC, open a web browser and go to https://www.thinkware.com/Support/Download.
2. Select the product and download the latest firmware upgrade file.
3. Unzip the downloaded file.
4. Disconnect power to the product and remove the memory card.
5. Open the memory card on a PC and copy the firmware upgrade file to the root folder of the memory card.
6. While the power is disconnected from the product, insert the memory card into the memory card slot on the product.
7. Connect the power cable to the product, and then turn on the power (ACC ON) or start the engine to turn on the product. The firmware upgrade starts automatically, and the system will restart once the firmware update is completed.

   Do not disconnect the power or remove the memory card from the product during the upgrade. Doing so may cause serious damage to the product, or to the data stored in the memory card.

You can also update the firmware from the mobile viewer and the PC viewer.

10. Troubleshooting

The following table lists the problems users may encounter while using the product and measures to resolve them. If the problem persists after taking the measures provided in the table, contact the customer service center.

Problems	Solution
Cannot power on the product	• Make sure the power cable (the optional hardwiring cable or car charger) is connected to the vehicle and the product properly. • Check the vehicle's battery level.
The voice guide and/or buzzer do not sound.	Check if the volume is set to the minimum.
The video is unclear or hardly visible.	• Ensure that the protective film on the camera lens has been removed. The video may look unclear if the protective film is still on the camera lens. • Check the installation location of the front or rear camera, turn on the product, and then adjust the camera's viewing angle.
The memory card cannot be recognized.	• Ensure that the memory card has been inserted in the correct direction. Before inserting the memory card, ensure that the metal contacts on the memory card are facing toward the lens of the product. • Turn off the power, remove the memory card, and then check to ensure that the contacts in the memory card slot are not damaged. • Ensure that the memory card is an authentic product distributed by THINKWARE. THINKWARE does not guarantee compatibility and normal operation of third-party memory cards.
The recorded video cannot be played on a PC.	The recorded videos are stored as MP4 video files. Ensure that the video player installed on your PC supports the playback of MP4 video files.
GPS signal cannot be received.	The GPS signal may not be received in out-of-service areas, or if the product is located between tall buildings. Also, GPS signal reception may not be available during storms or heavy rain. Try again on a clear day at a location that is known to have a good GPS reception. It may take up to 5 minutes until GPS reception is established.

11. Specifications

To see the product specifications, refer to the following table.

Item	Specification	Remarks
Model name	U3000	
Dimensions	69.8 x 55.5 x 99.9 mm	Rear Camera (BCQH-500): 79.3 x 36.9 x 31.9 mm (optional)
Memory	microSD memory card	32 GB, 64 GB, 128 GB, 256 GB
Camera sensor	5.14 Megapixel, Type 1/2.8"	
Angle of view (Lens)	Approximately 156° (diagonally)	
Video	Default: 4K UHD (3840 x 2160 @ 30fps) / H.265 / MP4	Option: QHD (2560 x 1440 @ 30fps) / H.265 / MP4
Recording mode	Continuous Rec, Incident Rec, Manual Rec, Parking Mode (Motion Detection / Time Lapse / Energy Saving)	
Features	Super Night Vision, Privacy Recording, Smart Parking Recording, Intelligent Impact Detection, RADAR, External Battery connected with the dash cam	
Acceleration sensor	3-axis acceleration sensor (3D, ±3G)	5 levels for sensitivity adjustment available
GPS	Embedded GPS	Supports ADAS features (LDWS, LDWS Speed, FCWS, Low Speed FCWS, FVDW, RCW)
GNSS	GPS/GLONASS	
Bluetooth	Standard	Bluetooth V5.0, BLE
	Frequency	2.402 MHz ~ 2.480 MHz
Wi-Fi	Standard	802.11 a/b/g/n/ac
	Frequency	2.400 GHz – 2.483.5 GHz 5.15 GHz – 5.25 GHz
RADAR Module	Frequency	24.00 GHz – 24.25 GHz Front / Rear Camera (BCQH-500)
Power input	DC 12 / 24 V ⎓ supported	Rear Camera (BCQH-500): DC 3.3 V ⎓
Power consumption	2ch: 5.6 W / 1ch: 4.1 W (mean)	Except for the fully charged supercapacitor / GPS Actual power consumption may vary depending on the usage conditions and environment. Rear Cemera(BCQH-500): 0.55 W (mean)
Auxiliary power unit	Super capacitor	
LED indicator	Security LED, REC LED, GPS LED, Connection LED	
Alarm	Built-in speakers	Voice guide (buzzer sounds)
Operating temperature	14 – 140°F / -10 – 60°C	
Storage temperature	-4 – 158°F / -20 – 70°C	

FCC Statement

This device complies with Part 15 of the FCC Rules. Operation is subject to the following two conditions: (1) this device may not cause harmful interference, and (2) this device must accept any interference received, including interference that may cause undesired operation.

This equipment has been tested and found to comply with the limits for a Class B digital device, pursuant to Part 15 of the FCC Rules. These limits are designed to provide reasonable protection against harmful interference in a residential installation. This equipment generates, uses and can radiate radio frequency energy and, if not installed and used in accordance with the instructions, may cause harmful interference to radio communications. However, there is no guarantee that interference will not occur in a particular installation. If this equipment does cause harmful interference to radio or television reception, which can be determined by turning the equipment off and on, the user is encouraged to try to correct the interference by one or more of the following measures:

- Reorient or relocate the receiving antenna.
- Increase the separation between the equipment and receiver.
- Connect the equipment to an outlet on a circuit different from that to which the receiver is connected.
- Consult the dealer or an experienced radio/TV technician for help.
- This appliance and its antenna must not be co-located or operation in conjunction with any other antenna or transmitter.
- A minimum separation distance of 20cm must be maintained between the antenna and the person for this appliance to satisfy the RF exposure requirements.

FCC CAUTION: Any changes or modifications to the equipment not expressly approved by the party responsible for compliance could void your authority to operate the equipment.

FCC ID: 2ADTG-U3000

CE RoHS UK CA

Before contacting a service center

Please back up all important data stored in the memory card. The data in the memory card may be deleted during repair. Every product requested for repair is regarded as a device that has had its data backed up. The customer service center does not back up your data. THINKWARE is not responsible for any loss, such as data loss.

https://www.thinkware.com

Ver. 1.0 (August, 2022)