Overview

Wireless Vehicle Detection System

Wireless Vehicle Detection System uses wireless magneto-resistive sensors to detect the presence and movement of vehicles. The vehicle detector– installed on the surface or in small holes cored in the roadway – transmit detection data in real-time via low-power radio technology to a nearby access point. Vehicle detections are further relayed to a traffic signal controller, remote traffic management center, or other system.

Vehicle detector embedded in the road to accurately measure vehicle occupancy and detection. Powered by an industry-leading D-cell lithium battery, vehicle detector will transmit real-time data autonomously for up to 10 years, providing a solution to a broad range of transportation needs.

Wireless Vehicle Detection System is simple to install and easy to use, with four primary components: the Vehicle Detector, Router Point, Access Point, and Adapter Module.

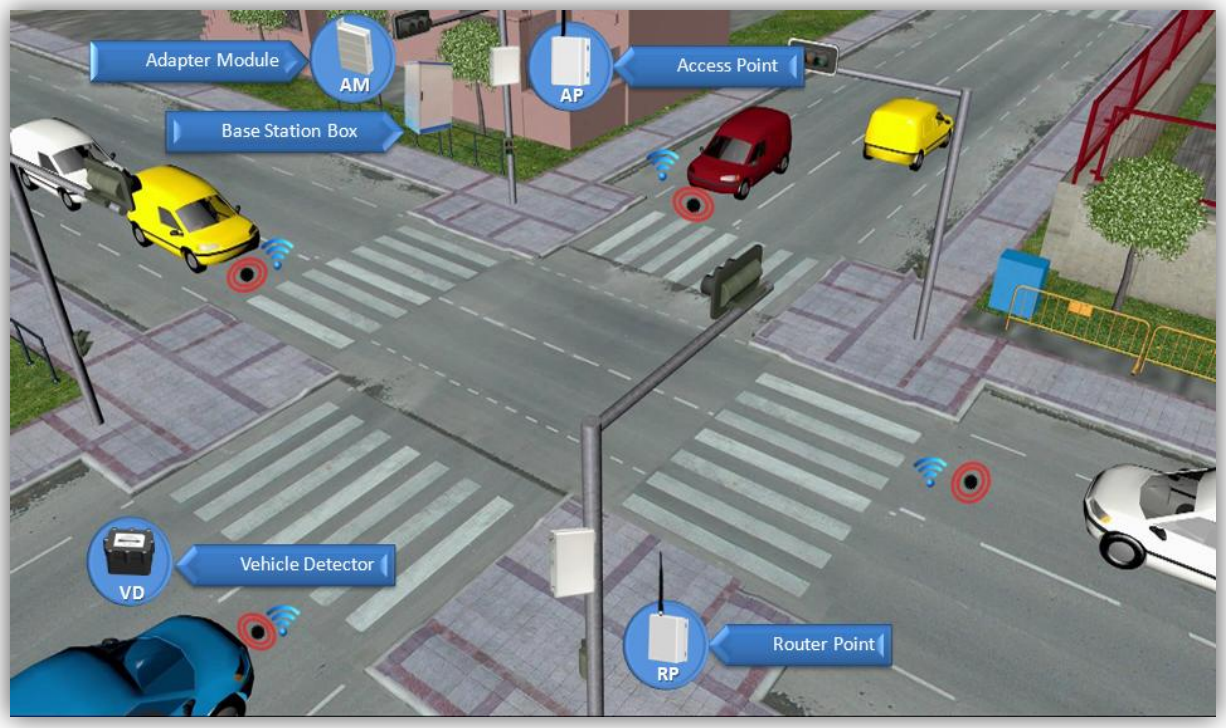

Vehicle Detector(VD)

The Vehicle Detectors combine a state-of-the-art magnetometer and a low-power radio in a small, hardened plastic case suitable for installation directly in the pavement. In typical traffic management applications, a sensor is placed in the middle of a traffic lane to detect the presence and passage of vehicles. Vehicle speeds and length are measured by two sensors installed in the same lane with the exact distance between them configured in software.

Functions / Features

2-axis/3- axis magnetometer for vehicle detection

- 50 Hz sampling rate
- Count and presence detection modes

Superior accuracy

Exceptional reliability

Flush-mount in-pavement installation with no wires or lead-in cabling

Fast & simple installation

- Installs in less than 10 minutes in small hole using a hammer or core drill
  - –– 108mm diameter; 100mm deep
  - – -Covered with fast-drying epoxy
- Minimal lane closure time
- No saw cuts

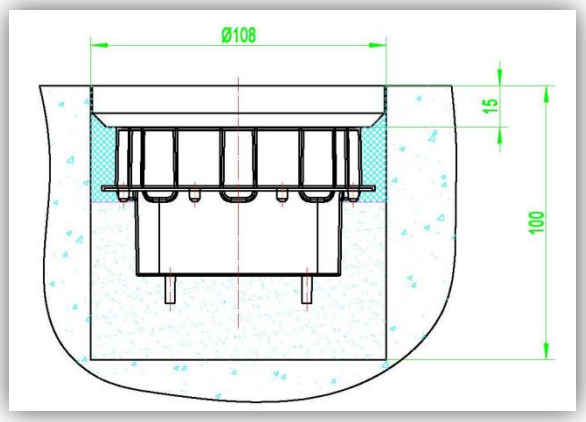

Extremely long battery life – average of 10 years

- Rugged mechanical design
- Auto-calibration

Reliable 2-way radio communications with access point

- Uniquely addressable and configurable
- Firmware can be upgraded over-the-air

Can be readily deployed where other systems cannot be used

- Split roadways
- High water tables
- Damaged pavement

Functional Specifications

Detection technique	2/3-axis magnetic field sensing, Stepless adjustable sensitivity
programmable vehicle detection parameters	• Vehicle Detector ID • the network band • sensitivity • The sampling frequency
protocol	IEEE802.15.4，Zigbee PRO
transmit/receive bit rate	250kbps
frequency band	2.4-2.483GHz
frequency channels	16
channel bandwidth	2MHz
antenna type	microstrip patch antenna (mounted below top surface of sensor)
nominal output power	Up to 10dBm
Typical receive sensitivity	-100dBm

Power, Physical, & Environment

power supply	non-replaceable primary Li-SOCl 3.6V battery 19Ah(nominal capacity)
dimensions	87mmx69mmx52mm
weight	0.3kg
environmental	Designed for in-pavement mounting IP67 ingress protection
operating temp	-20°C to +45°C

Access Point （AP）

Access Point is an intelligent device operating that maintains two-way wireless links to a vehicle detection system's detectors and routers, establishes overall time synchronization, transmits configuration commands and message acknowledgements, and receives and processes data from the detectors. The access point then uses either wired or wireless connections (or both) to relay the sensor detection data to a roadside traffic controller or remote server, traffic management system, or other vehicle detection application.

Functions / Features

Radio communications

- To/from wireless sensors
- To/from Router Point

Relay of sensor data

- Via contact closure signals to traffic controller
- Via serial connectivity (RS232/RS485) to traffic management systems, upstream systems, etc.

Processing of sensor data

- Per-lane or per-vehicle data
- Data binning over selectable time intervals
- Data filtering (e.g., adaptive holdover)

Storage of sensor data

- Data buffering (event caching)
- Data storage (processed data)

Firmware upgrades

- Can be upgraded via serial connectivity or via local PC connection
- Can deliver upgrades to all other systems devices

Simple installation

- Any roadside location that provides adequate signal coverage to sensors/repeaters
- No special requirements regarding setback, relative angle of the sun, or mounting stability

Functional Specifications

interfaces	• to/from Vehicle Detectors via 802.15.4 PHY radio • to/from Routing Point via 802.15.4 PHY radio • to/from configuration device(PC) via serial interface
per-lane data processing	• counts(volume) • occupancy • average and median speeds • binned speeds and vehicle lengths overs electable time intervals
per-vehicle data processing	• initial vehicle detect time • gap • speed • length
physical layer protocol	IEEE802.15.4PHY
transmit/receive bit rate	250kbps
frequency band	2.4 to 2.483GHz (ISM unlicensed band)
frequency channels	16
channel bandwidth	2MHz
antenna type	Omnidirectional (outside the installation box)
nominal output power	Up to 10dBm
typical receive sensitivity	-100dBm (PER≤1%)
Saturation (max input level)	≥10dBm

Power, Physical, & Environmental

input voltage	• via PoE cable to RJ45 connector • 9-36VDC (12VDC nominal)
power consumption	2W
dimensions	Access Point: 96mm x 94mm x 28mm Base station box :165mm x 26mm x 68mm
weight	Access Point: 0.19kg Base station box : 0.5 5kg
environmental	• designed for weather proof, outdoor operation • IP65 ingress protection
operating temp	-20°C to +45°C

Routing Point

In cases where one or more installed Networks wireless sensors are out of range of the nearest access point, one or more Networks repeaters can be used to provide a two-way relay between the out-of-range sensors and the access point. As many as two repeaters operating in tandem can be installed between a sensor and the access point. To simplify its deployment, draw power directly from a traffic light pole, to reduce the difficulty of construction.

A router extends the range and coverage of an installation's access point. Mounted by the roadside on a pole or other structure, the router must be positioned so that both the detectors to be supported by the router and the communicating router or access point are within view and within range.

Functions / Features

Relay of radio communications

- To/from Detectors
- To/from Access Point
- To/from another router

Extension of range and coverage of the access point

- Can be operated in tandem – one repeater and its supported sensors can communicate with another router and then to the access point
- Maximum single-hop range of 500 meters from supporting access point or router point

Fully wireless operation – installation

- The traffic lights turn no effect
- Pole electric

Simple installation

- Any roadside location that provides adequate signal coverage to sensors and the access point or router
- No special requirements regarding setback, relative angle of the sun, or mounting stability

Firmware upgrades over-the-air from access point

No calibration or adjustment required

Functional Specifications

physical layer protocol	IEEE802.15.4/Zigbee PRO
modulation	Direct Sequence Spread Spectrum Offset Quadrature Phase-Shift Keying (QPSK)
transmit/receive bit rate	250kbps
frequency band	2.4-2.483GHz
frequency channels	16
channel bandwidth	2MHz
antenna type	The interface of SMA antenna
antenna field of view	Omnidirectional
nominal output power	Up to 10dBm
Typical receive sensitivity	-100dBm
installation	fixed in the base station box

Power, Physical, Environmental, & Compliance

power supply	9~36VDC (12VDC nominal)
dimensions	Routing Point: 91mm x 85mm x 25mm Base station box :165mm x 26mm x 68mm
weight	Routing Point: 0.15kg Base station box : 0.5 kg
environmental	IP65 ingress protection(Base station box)
operating temp	-40°C to +80°C

Adapter Module

The adapter module as data transfer equipment, can be received and processed the vehicle state data from the regional controller, and convert it to a dry contact signal output to the terminal equipment, data exchange through RS485 communication. In addition, the adapter module provides 24 state indicating lamp, used for visual display of the vehicle state information of each lane. The adapter module as data transmission equipment, mainly to complete and the terminal system or equipment debugging docking, can provide various types of external interfaces, such as RS232/RS485/ contact signal /TTL level signal /RJ-45 interface. If need be, customizable supporting interface, to achieve the perfect docking device.

Functions / Features

Relay of radio communications

- Reliable dry contact signal

Function extension

- can provide RS232/RS485 /TTL level signal /RJ-45 interface
- Can be customized according to demand the interface

Simple installation

- Installed in the terminal system equipment cabinet

Functional Specifications

communication	RS485(regional controller)
power supply	12VDC
average current	≤50mA
maximum current	120mA
interface form	contact signal
installation	fixed in the base station

Power, Physical, & Environmental

power supply	take power in base station
dimensions	157mm x 104 mm x 40mm
weight	0.37 kg
operating temp	-20°C to +45°C

This equipment has been tested and found to comply with the limits for a Class B digital device, pursuant to part 15 of the FCC Rules. These limits are designed to provide reasonable protection against harmful interference in a residential installation. This equipment generates, uses and can radiate radio frequency energy and, if not installed and used in accordance with the instructions, may cause harmful interference to radio communications. However, there is no guarantee that interference will not occur in a particular installation. If this equipment does cause harmful interference to radio or television reception, which can be determined by turning the equipment off and on, the user is encouraged to try to correct the interference by one or more of the following measures:

- Reorient or relocate the receiving antenna.
- Increase the separation between the equipment and receiver.
- Connect the equipment into an outlet on a circuit different from that to which the receiver is connected.
- Consult the dealer or an experienced radio/TV technician for help.

Caution: Any changes or modifications to this device not explicitly approved by manufacturer could void your authority to operate this equipment.

This device complies with part 15 of the FCC Rules. Operation is subject to the following two conditions: (1) This device may not cause harmful interference, and (2) this device must accept any interference received, including interference that may cause undesired operation.

To comply with FCC Part 15 rules in the United States, the system must be professionally installed to ensure compliance with the Part 15 certification. It is the responsibility of the operator and professional installer to ensure that only certified systems are deployed in the United States. The use of the system in any other combination (such as co-located antennas transmitting the same information) is expressly forbidden.

To comply with FCC RF exposure compliance requirements, this grant is applicable to only mobile configurations. The antennas used for this transmitter must be installed to provide a separation distance of at least 20 cm from all persons and must not be co-located or operating in conjunction with any other antenna or transmitter.