7- Cleaning

7.8 Cleaning the mixing system parts

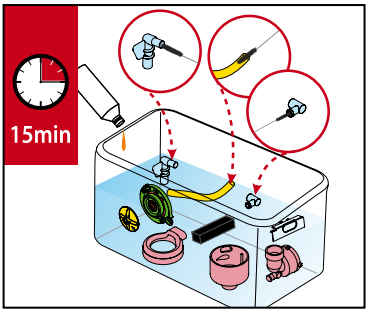

Fig.13

1. Place all the mixing system parts in a bin with a locally approved food grade cleaning agent and hot water and soak for approximately 15 minutes. (See Fig.13)

Note:
Use a pipe brush to clean the tubes.
Comply with the safety instructions and cleaning instructions on the cleaning agent packaging.
The mixing system parts can also be washed in a dishwasher.

7.9 Reassemble mixing system

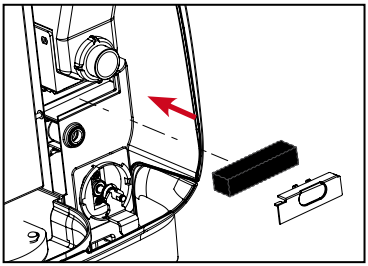

Fig.14

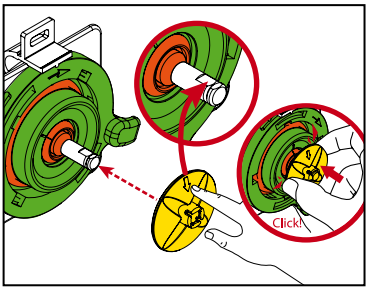

Fig.15

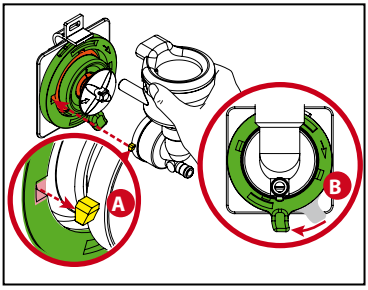

Fig.16

1. Replace the filter and its cover. (See Fig.14)
2. Replace the mounting plate on the mixer motor and shaft. Make sure to align the arrow on the whipper towards the flat surface on the shaft. Press the whipper onto the shaft until it “clicks” into position. (See Fig.15)
3. Turn the mounting plate clockwise until the mixer holes are aligned to the 3 o’clock and 9 o’clock positions. Align the guide hooks on the mixer bowl and instert them through the plate and into the chassis (A). Finally, lock the mixer bowl in by rotating the mounting plate clockwise until it complete stops turning and the tab is at the 6 o’clock positon (B). (See Fig.16)
4. Replace the tube on the mixer bowl (C), and snap the outlet nozzle on the mixing tray. The display will show WATER TREATMENT PANEL REMOVED, close the panel (D) and the machine will automatically return to normal dispensing functions. (see fig.17)

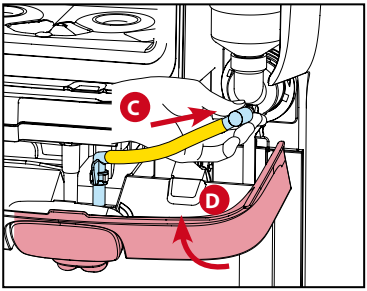

Fig.17

7- Cleaning

7.10 Replacing product packs and flushing the outlets

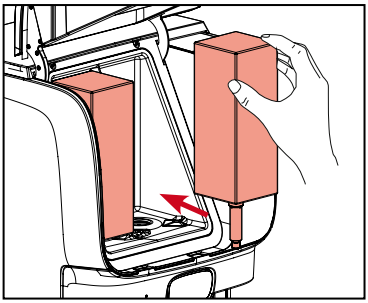

Fig.18

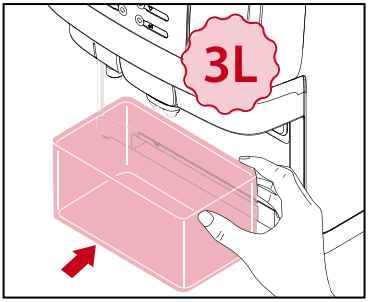

Fig.19

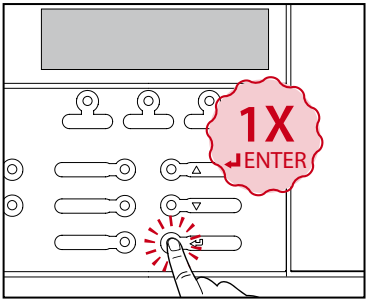

Fig.20

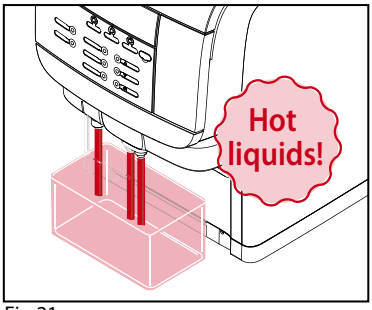

Fig.21

1. When the packs are removed, the display will show: ***PLACE BACK PRODUCT PACKS***

Reinstall the product packs if they have not passed the expiry date. If expired, replace with new product packs (see Fig. 18).

2. When both packs have been placed in the cooling compartment, the display will automatically continue and show: ***PLACE FLUSH BIN MIN 1L PRESS ENTER WHEN DONE***

3. Remove the drip tray and place a 3 liter / 3 quart container (see Fig.19) under the outlets, then press **ENTER** . Follow the instructions on the display: ***PRESS ENTER TO FLUSH***

4. Press **ENTER** to begin flushing the drink outlets (See Fig 20-21).

   CAUTION HOT LIQUIDS is shown in the display.

   When done, dispose of the flushed water and replace the drip tray. The dispenser is ready for use.

Warning:
The drinks dispensed are hot! Avoid scalding! Keep hands and other body parts away from the dispenser during the flushing process. Never let children perform the cleaning procedures.

7- Cleaning

7.11 Cleaning the foam air filter

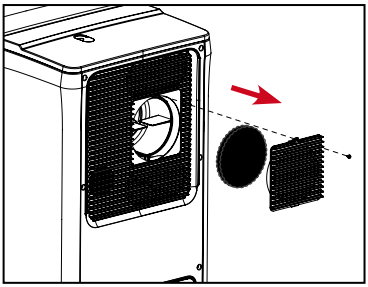

Fig.24

Fig.25

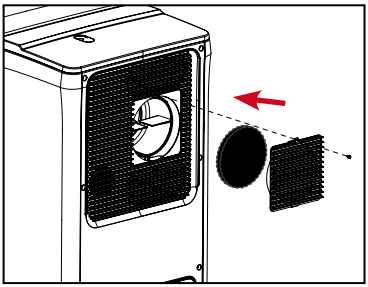

Fig.26

1. Remove the fixing screw and open the removable ventilation cover to access the foam air filter. (See Fig.24)
2. Rinse the air filter and cover with warm water to remove any accumulated dust. Squeeze excess water out of the foam air filter and dry the cover with a towel to prevent water getting into the air inlet. (See Fig.25)
3. Replace the air filter and ventilation cover and reinstall the fixing screw. Do not overtighten the screw. (See Fig.26)

Note:
The air filter should be cleaned once per month under normal conditions, or twice per month in extremely dusty conditions.

7- Cleaning

7.12 Cleaning the water tank

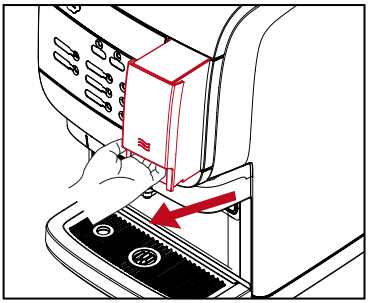

Fig.27

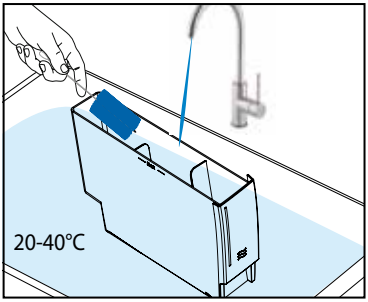

Fig.28

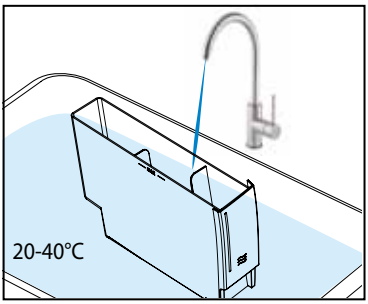

Fig.29

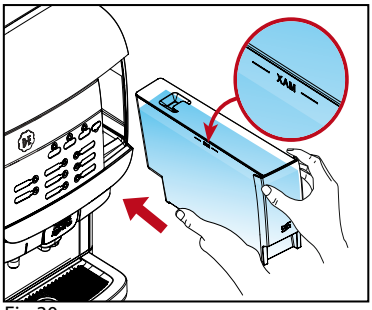

Fig.30

1. Remove the water tank by lifting slightly, then pulling straight out. (See Fig.27)
2. Wash the water tank with clean water, 20-40°C / 68-104°F. A food-safe cleaning agent may be used as needed. (See Fig.28)
3. Rinse the water tank thoroughly with clean water, 20-40°C / 68-104°F. (See Fig.29)
4. Refill the water tank to the MAX level with fresh, clean water and replace it in the dispenser. (See Fig.30)

8- Troubleshooting

Symbol	Cause	Action
REFILL RIGHT PRODUCT	**Empty ingredient pack (right hand side)**	Replace the right ingredient pack
REFILL LEFT PRODUCT	**Empty ingredient pack (left hand side)**	Replace the left ingredient pack
REFILL PRODUCT	**The product packs are:** **1. empty** **2. incorrectly positioned** **3. not present**	• Insert a product pack. • Replace the empty product packs. • Check whether the product pack is inserted correctly. • Call the operator when the number is shown on the display.
BOILER HEATING UP	**The water in the boiler has not yet reached the required temperature.**	The drink delivery of the dispenser is blocked until the temperature reaches the correct value.
	The drink delivery is blocked because the Standby/Clear-Error button on the dispenser was pressed.	Press the Standby/Clear-Error button again to unlock the dispenser.
	The dispenser must be cleaned.	Run the cleaning program within the same day. Call the operator if the number is shown on the display.
CLEANING OVERDUE	**The drink delivery is blocked because the dispenser was not cleaned as scheduled.**	Run the cleaning program immediately. Call the operator if the number is shown on the display.

8- Troubleshooting

Symbol	Cause	Action
	The water filter must be replaced. (some options not available in all markets)	Contact service to replace the water filter.
ECO ECO WAKEUP/ PRESS DRINK BUTTON	**The drink delivery is blocked because ECO mode is on.**	• The ECO mode will end automatically at the set time. • To dispense immediately, press a drink button. The boiler will start to heat up and when normal temperature is reached it will dispense a drink. ECO mode reactives 10 minutes after the boiler has heated up or 10 minutes after the last drink was dispensed.
Err 11/17/18 OR CHECK WATER SUPPLY **+ 0123456789**	**Water system error**	• Check if the water supply line to the dispenser is blocked, check if the water tap is turned off. • Press and hold the LOCK/Clear switch for 5 seconds to restart the machine. • Contact service if the error remains.
Err 30 **+ 0123456789**	**Cooling error**	• Check the ventilation and the ambient temperature of the dispenser, and clean the ventilation grid if necessary. • Press and hold the LOCK/Clear switch for 5 seconds to restart machine. • Contact service if the error remains.
WATER TREATMENT / PANEL REMOVED	**Water treatment panel is not detected**	• Check if the fluid treatment panel is incorrectly closed or a part is missing. • Contact service if the error remains.
MIXING TRAY REMOVED	**Mixing tray not detected**	• Check if the mixing tray is incorrectly inserted or a part is missing. • Contact service if the error remains.
DRIP TRAY FULL	**Drip tray is full**	Remove the drip tray, empty and replace it.

Produced by Crem International (Shanghai) Co., Ltd.
Address: Building 5, No 521-551 KangYi Road, Pudong New Area, Shanghai, China

www.creminternational.com