INMOTION

V13

Challenger

Electric Unicycle User Manual

Please wear an approved helmet, elbow pads, knee pads and other protective gear before riding.
Please read the user manual and keep it for ready reference.

INMOTION

Contents

1. About This Manual 2
2.Brief Introductions 2
2.1Serial Number 2
2.2Packing List 2
3. Diagram 3
4. Functions 3
5. Specifications 5
6. Dimension 6
7. Initial Use 6
7.1 Before Use 6
7.2 Download INMOTION APP 7
7.3 Air Springs 7
7.4 Damping Adjustment 8
7.5 Suspension Adjustment 8
7.6 Remove Air Suspensions and Dampers 9
7.7 Learning to Ride 10
8. Safety Instructions 11
9. Care and Maintenance 12
9.1 Storage 12
9.2 Battery Maintenance 13
9.3 Daily Maintenance and Care 13
10.Trademark and Legal Statement 14
10.1Personal Information Statement 14
10.2Trademark Statement 15
10.3 Intellectual Property Declaration 16

1. About This Manual

This manual applies to the electric unicycle Challenger V13 (hereinafter referred to as V13) produced by INMOTION Technologies Co.,Ltd. V13 is an intelligent, high-tech recreation product . When you use V13, there may be injuries caused by collision or falls and other risks. To reduce the possible risks and ensure the personal and property safety of you and others, please read this manual carefully and fully understand all warnings and precautions listed in it, then make sure you use it correctly.

For the latest features/functions and safety guidance, please download from INMOTION official website.

2.Brief Introductions

2.1Serial Number

Serial number (hereinafter referred to as SN) is a unique identifier assigned sequentially to an item which can be used for warranty, maintenance, insurance compensation, damage confirmation, etc. SN is a 16-character number that can be found from the packing case sticker, user manual, vehicle body, and vehicle information on INMOTION App.

2.2Packing List

Before use, please read this user manual carefully and check to confirm that any and all parts are in serviceable condition. If any parts are missing, please contact your dealer immediately.

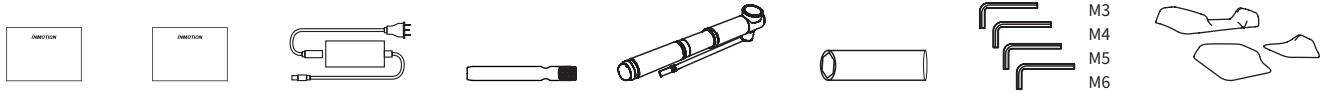

User Manual | Quick start guide | Power Adapter | Damper Regulator | Inflator | hex socket | wrench*4 | Power Pads

Warning: Please retain the box at least 30 days after the date you receive your product for future use when transporting the electric unicycle.

3. Diagram

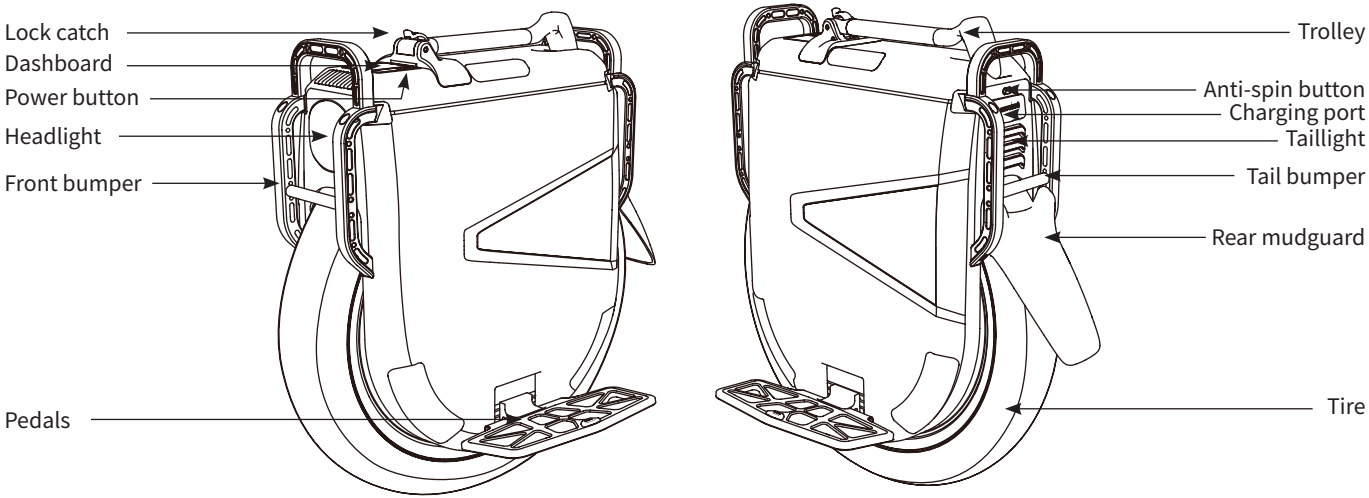

4. Functions

Power on/off: Long press the power button to turn on the wheel. Long press the power button to turn off the wheel after powering on.
Headlight: Press the power button to turn on/off the light after powering on; The headlight can be set to automatically on/off on the App.
Taillight: It flashes brightly when braking; The taillight keeps lighting up when the headlight is on.
Anti-spin button: Press and hold the anti-spin button, the vehicle could result in loss of balance.
Power Assistant : Turn on this mode to help you accelerate and brake rapidly.
Acceleration Assistant: Adjust the values for better and rapid acceleration with smaller values representing shorter braking distance.
Brake Assistant: Adjust the values for better and rapid acceleration with greater values representing shorter braking distance.

Charging

The original charger is 126V⎓5A. Blue light indicates the Power is on, green light shows when the battery is fully charged, and red light indicates it's charging or completion of charge. Two chargers working together will reduce charging time by 50%; Type-C and USB ports are available for power output.

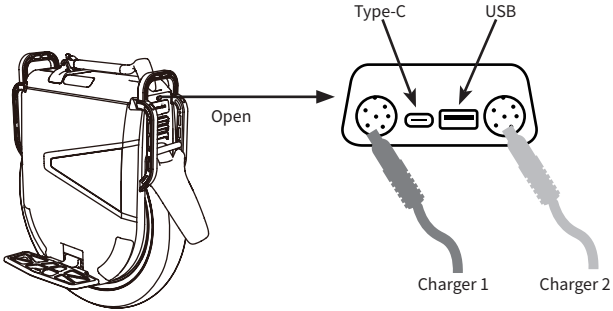

Suspension

The air suspension systems must be inflated when you use them for the first time.

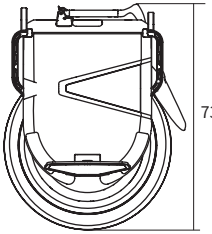

Before Air Springs Inflation

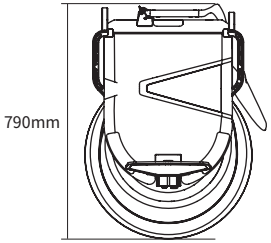

After Air Springs Inflation

Trolley

Unfold: Pull up the lock catch, the trolley will bounce up automatically.

Fold: Pull up the lock catch, then press down the trolley.

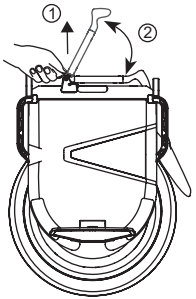

Dashboard

Get real-time riding information and set vehicle parameters after entering the password

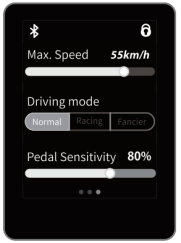

5. Specifications

Specification	Items	Parameter
Basic specs	Model	V13
	Dimension	579x268x731mm
	Net weight	Approx. 53.2kg
Requirement to Rider	Max. palyload	130kg
	Required height	120-200cm
	Recommended age	16-50 years
Performance	Typical range [1]	Approx. 90-140km
	Max. slope [2]	Approx. 45°
	Max. speed [3]	90km/h
	IP rating	IP55
	Charging time	Approx. 6h
	Working Temperature	-10°C ~ 45° C
	Storage Temperature	-20°C ~ 45° C
Battery	Intelligent BMS	Over-charge, Over-temperature, Over-discharge, Over-current, Short circuit, Over-voltage
	Rating Voltage (VDC)	126V
	Capacity	3024Wh
Motor	Nominal power	4500W
	Max.of power	10000W
Charger	Input Voltage (VAC)	AC100-240V 50/60HZ
	Output Voltage (VDC)	126V ⎓ 5A
Other	Display	2.4 Inch touch-screen
	Output ports	USB+Type-C
	Tire size	22 Inch air-filled low rolling resistance tire （Tire pressure is 40Psi or 2.8Bar）

[1]: Measured with 75kg load at a speed ranging from 25km/h to 40km/h on the flat road in windless conditions when fully charged. The range depends on temperature, tire pressure, road condition, riding habit (like sudden acceleration, shock absorption and etc.)
[2]: Measured with 75kg load when fully charged.
[3]: Measured with 75kg load at 25°C on the flat road in windless conditions when fully charged.

6. Dimension

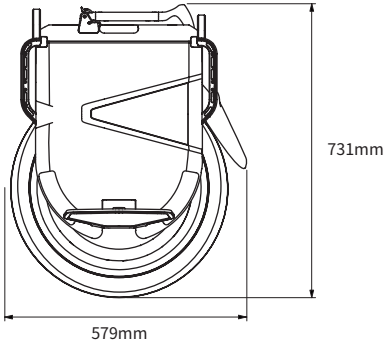

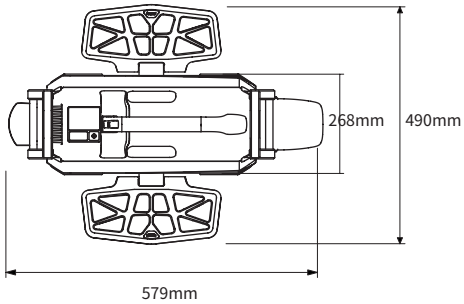

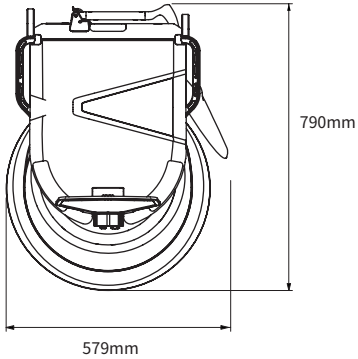

7. Initial Use

7.1 Before Use

V13 is a high-tech recreation product. When you ride without following the operation specifications, it may lead to unpredictable injuries and property losses. The following will explain how to use V13 and the precautions in details. Please read it carefully and use V13 as required. Before using, please make sure that all parts of V13 are not damaged and installed properly.

Note:

- Before using the V13, ensure that the battery is fully charged. It is recommended to charge it more than 80 percent of capacity.
- Find a relatively open and flat area to practice riding, (at least 4m by 4m in area), both inside and outside. You need to be fully aware of the riding environment around you to ensure that you are not disturbed by obstacles such as cars, pedestrians, pets, bicycles, etc.
- You need a skilled assistant stood by. The assistant must be familiar with V13 and all precautions and usage methods in this manual.
- Please do not ride the vehicle on slippery ground.
- Users are advised to wear comfortable, casual or sports clothing, and to wear flats and warm up to improve your flexibility.
- Be sure to wear a helmet and riding protective gear to avoid injury.

7.2 Download INMOTION APP

Download the App in the following ways
1. Scan the QR code below
2. Search “INMOTION” in the Apple store or Google Play Store.
3. Visit www.inmotionworld.com/support/app

Note:

V13 supports Bluetooth 5.0 BLE. The BLE ID is V13-XXXXXXXX, where XXXXXXXX is the last 8 digits of SN.

Install the INMOTION App on your mobile device (iOS 8.0 and above or Android 4.4 and above supported) and follow the prompts to connect your V13.

For more functions, please visit the official website to download the latest version of INMOTION App user manual.

7.3 Air Springs

Please inflate the built-in air spring before using this product, otherwise it may damage the product.

⚠ **After powering off, lay the vehicle flat for 10 min and then inflate it as shown in the picture.**

Before inflating, unscrew the red covers of the air springs at the bottom of the pedals, and then use the inflator delivered with the vehicle to inflate, refer to the table below for air pressure. It is recommended to check the air pressure every 3 months.

Weight - Barometer	
Weight	Air pressure
Under 60kg	80-120psi
60-70kg	120-130psi
70-80kg	130-150psi
80-90kg	150-180psi
90-100kg	180-200psi
100-130kg	200-220psi

Scan to check out the how-to video

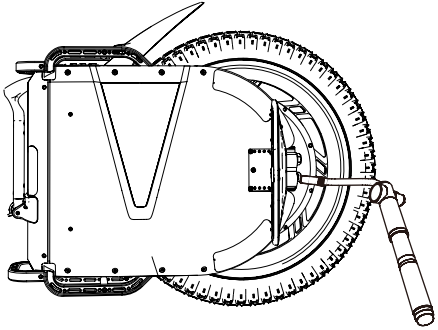

7.4 Damping Adjustment

For initial use, user can adjust the damper according to weight and preference as follows

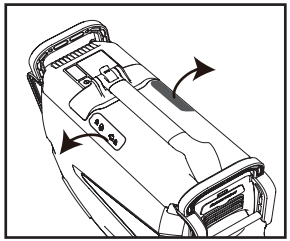

1.Open the protective cover.

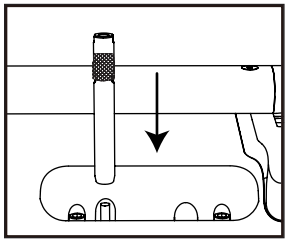

2. Take out the damping regulator from accessories, insert it into the damping adjusting port in the direction shown in the figure, turn the regulator, the damping decreases counterclockwise, and increases vice versa.

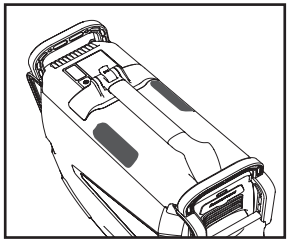

3. After adjustment, cover it tightly.

7.5 Suspension Adjustment

There will be a certain gap when the shock absorbing parts are used for a long time. When the riding experience is affected, use the M3 wrench delivered with the vehicle to adjust it. Reduce the gap by turning the M3 wrench clockwise, on the contrary, it increases.

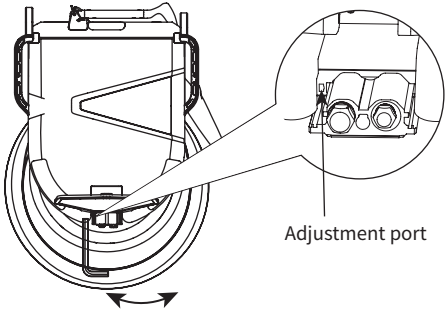

Scan to check out the how-to video

7.6 Remove Air Suspensions and Dampers

Scan to check out the how-to video

How to Remove the Air Spring and Damper

How to Install the Air Spring and Damper

7.7 Learning to Ride

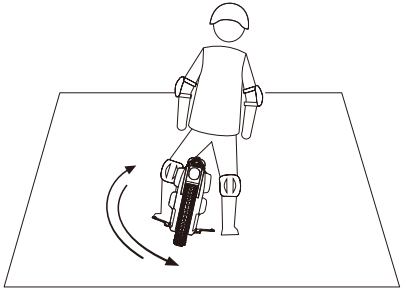

1. Step on the pedal with one foot, then swing back and forth.

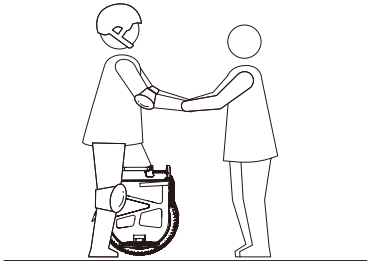

2. Step on the pedal with one foot, keep your feet and body upright and gradually shift your weight up.

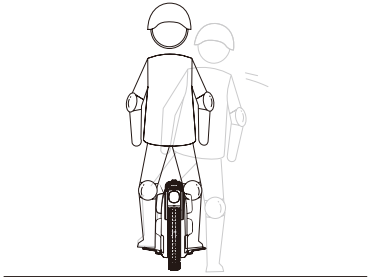

3. Step on the pedal with one foot, lift the other foot off the ground for 1-2 seconds and start gliding.

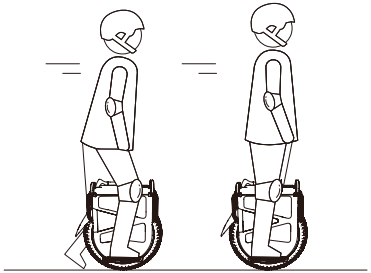

4. Step on the pedal with one foot, push back with the other foot and start gliding.

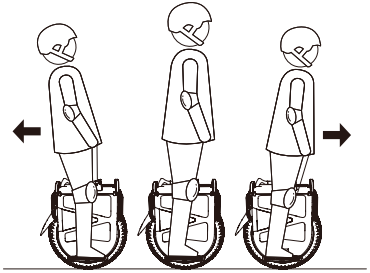

5. Step on pedals with both feet, use your weight to move forward and back

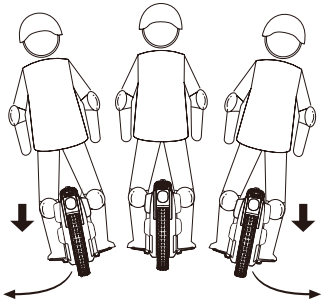

6. Press the pedals with feet by different force to make a turn.

8. Safety Instructions

For your safety and excellent user experience, we recommend that all users strictly comply with the following requirements:

1. Please read and fully understand the manual before riding. This product is not for use by anyone under the age of 16.
2. Pregnant women and people with physical and mental disorders are not allowed to ride.
3. Do not ride V13 when you are ill, under medication, drinking alcohol or in poor physical or mental state.
4. V13 is for one rider only. Two or more people are not allowed to ride at the same time. Do not carry a child or heavy objects while riding.
5. Make sure you are physically and mentally fit to get on and off the unicycle and control it without assistance before riding.
6. Please do not modify or repair the vehicle in any way.
7. Before each use, check whether there are loose or damaged, excessive wear parts of EUC.
8. Before charging the unicycle, ensure that the charging port is dry, fault-free and free of foreign matter. Plug it into the correct charging socket, and keep it away from children, pets and inflammable goods.
9. Unicycle batteries should be stored in a wide range of ambient temperatures, with -20°C to 45°C . Do not charge or ride V13 outside with the temperature from -20° C to 45° C.
10. If the battery is out of shape (including damage, odor, smoke, or overheating), stop using it immediately and keep it away from any objects.
11. Do not attempt to open, remove, or perform any abnormal operations on the battery.
12. Never ride V13 in inappropriate shoes (such as high heels) or clothing, and always wear professional protective gear.
13. Protective glasses while riding is highly recommended to wear to prevent eye damage and other possible adverse effects from dirt, dust or insects in the air.
14. Unicycles are prohibited in heavy rain and on other sloping roads. Tire resistance on wet or slippery road decreases, braking distance increases, and it is easy to slip or lead to accidents, including loss of control.
15. It is forbidden to ride V13 in adverse conditions such as bad weather, poor visibility and poor light. Please do not ride a unicycle when you are extremely tired.

16. When riding, please pay attention to the changes of the road surface or the surrounding environment in time to avoid causing injury to yourself or others.
17. Do not ride in inappropriate road conditions and conditions, such as stairs, lifts or turnstiles.
18. When riding, pay attention to the distance between the unicycle/body and obstacles.
19. Don't take chances when you encounter steep slopes, uneven sections of road, or other terrain you've never encountered before.
20. Don't turn at high speeds and don't brake suddenly on smooth roads. These behaviors can easily cause dangerous situations (such as skidding).
21. Do not answer the phone or do any activity or behavior that may distract you while riding a unicycle so that you can concentrate on the external environment at all times.
22. A unicycle is a product for personal transportation over short distances and is prohibited from carrying any cargo or other improper purposes.
23. The data and specifications of electric unicycle are subject to change without prior notice.

9. Care and Maintenance

9.1 Storage

Please store in a dry, indoor place with appropriate temperature and humidity. If you do not use V13 for a long time, please charge it every three months to more than 80%. If you do not use the vehicle for a long time, if do not charge in time, the battery may be damaged irreversibly by overdischarge. There is a smart chip inside the battery recording the charge-discharge logs of the battery; damage caused by over charge or over discharge will not be covered by the limited warranty.

9.2 Battery Maintenance

- Avoid exposing the battery to ambient temperatures higher than 45 Centigrade or lower than -20 Centigrade (for example, do not place V13 or its battery in a car in hot sunlight in summer). Do not throw the battery into a fire as this could damage it, cause overheating or even a fire.For more maintenance precautions, see the battery label.
- After each use, fully recharge the battery to extend its service life. Completely draining the battery may permanently damage the battery.
- At normal temperatures, the battery can get a higher range; At temperatures below 0 Centigrade, you may notice a decrease in battery life and performance.
- In general, at -20 Centigrade, the range may be half or less of normal temperatures.The range will recover when temperature rises.

9.3 Daily Maintenance and Care

- Before cleaning, make sure the V13 is powered off, unplug the charging cable, and close the charging port. Keep the charging port dry.
- Wipe the vehicle with a soft cloth dipped in soapy or clean water.
- Do not wash the V13 with high pressure water.

Note:

Do not clean the V13 with alcohol, petrol, kerosene or other corrosive and volatile chemical solvents, to avoid serious damage.

⚠ **Warning:** Do not remove the battery without authorization, otherwise it may cause serious safety accidents such as electric shock or short circuit.

10.Trademark and Legal Statement

10.1Personal Information Statement

1. Your personal information refers to all the information you voluntarily input when connecting the V13 with INMOTION App (hereinafter referred to as App) for registration and certification to bind the V13.
——All information you voluntarily input when connecting, registering, certifying and binding the V13 with the APP.
2. During the use of the APP, the personal information you provide in the process of car owner certification, product serial number activation, questionnaire survey, after-sales tracking and return visits to relevant products or services for comments or suggestions, and participation in activities, so that we can provide you with better products and services and improve and enhance your user experience.
3. You have the right not to provide personal information, but if you do not provide some of your personal information, we may not be able to provide you with better products and services, or even affect your use of our products.
4. If you provide any personal information, it is deemed that you fully agree that INMOTION may use and disclose it to the affiliated companies. The use of the company and the affiliated companies includes but is not limited to the use of the company's internal employees, consultants, agents, suppliers and partners.
5. You agree that we may provide your personal information to relevant third parties if any of the following conditions are met
(1) with your special authorization;
(2) comply with relevant laws or mandatory requirements put forward by government organs (including judicial organs);
(3) enforce the available terms of service (including investigation of possible violations);
(4) deal with fraud, security or technical issues;
(5) to protect the rights, property or safety of users or the public from damage to the extent required or permitted by law;
(6) special or emergency needs.
6. The use, transmission and storage of your personal information include electronic data, and the foregoing actions may be occurred in or outside China.
7.For your better use and experience, you fully agree that INMOTION and its affiliates may push information about the products, services and related activities to you from time to time.

8. For your personal information security, we will take reasonable and safe measures to protect your personal information from unauthorized disclosure and use. We will also urge other parties who receive and use your personal information mentioned in this Statement to perform the same obligations. You agree that INMOTION will store and retain your personal information according to the time required for the purpose of use or any agreements, laws and regulations.
9. You hereby agree to release INMOTION and/or its affiliates from any and all claims, liabilities and losses arising out of or which may result from the disclosure and use of your personal Information in accordance with this legal Statement, unless such claims, liabilities and losses are caused by the direct intentional acts or gross negligence of the Receiving Party and/ or User Party.

10.2Trademark Statement

1. INMOTION is the registered trademarks of INMOTION Technologies Co., Ltd; Android, Google Play are trademarks of Google Inc., App Store is a service mark of Apple Inc., The respective owners reserve the rights of their trademarks referred to in this manual.
2. We have attempted to include descriptions and instructions for all the functions of the scooter at the time of printing. However, due to constant improvement of product features and changes of design, your scooter may differ slightly from the one shown in this document, please refer to the actual product (including but not limited to appearance, color, and size.)
3. INMOTION Technologies Co., Ltd. All rights reserved.

Manufacturer: INMOTION Technologies Co., Ltd
Address: 18F, B1, Nanshan iPark, No.1001, Xueyuan Ave.,Shenzhen, P.R.C.518055
Product implementation standards: Q/LXTX 001-2021

10.3 Intellectual Property Declaration

1. Except as otherwise stipulated by laws and regulations, or unless otherwise specified in the agreement, INMOTION reserves all rights to the intellectual property rights (including but not limited to copyright, trademark right, patent right and right of application, right of implementation, right of licensing, etc.) related to the products and their accessories, App and website without the prior written consent of INMOTION. No illegal use or any other punishment.
2. This legal declaration shall be governed by the laws of the People's Republic of China.
3. INMOTION shall not be liable for all claims, liabilities and losses caused or possibly caused by the violation of this legal statement by consumers and any third party.
4. This legal declaration is an integral legal part of the products of INMOTION (please forward the products together with the resale).
5. You may choose to accept all terms of this legal statement and use INMOTION products. If you use INMOTION products, you are deemed to agree to accept all terms of this legal statement, and assume any possible risks and liabilities.
6. If you do not agree to accept all the terms of this legal statement after you purchase our products, please return the products and ensure that the products and packaging are intact when you return them, so as not to affect the resale.

Thank you for purchasing products. If you have any questions, we are happy to serve you at any time!

INMOTION App

Facebook Group

Website

Version: V1.0
Customer service center:service@imscv.com

FCC STATEMENT :

This device complies with Part 15 of the FCC Rules. Operation is subject to the following two conditions:
(1) This device may not cause harmful interference, and
(2) This device must accept any interference received, including interference that may cause undesired operation.
Warning: Changes or modifications not expressly approved by the party responsible for compliance could void the user's authority to operate the equipment.

NOTE: This equipment has been tested and found to comply with the limits for a Class B digital device, pursuant to Part 15 of the FCC Rules. These limits are designed to provide reasonable protection against harmful interference in a residential installation. This equipment generates uses and can radiate radio frequency energy and, if not installed and used in accordance with the instructions, may cause harmful interference to radio communications. However, there is no guarantee that interference will not occur in a particular installation. If this equipment does cause harmful interference to radio or television reception, which can be determined by turning the equipment off and on, the user is encouraged to try to correct the interference by one or more of the following measures:

Reorient or relocate the receiving antenna.

Increase the separation between the equipment and receiver.

Connect the equipment into an outlet on a circuit different from that to which the receiver is connected.

Consult the dealer or an experienced radio/TV technician for help.

RF warning statement:

The device has been evaluated to meet general RF exposure requirement. The device can be used in portable exposure condition without restriction.