INMOTION

Adventure

Electric unicycle User Manual

Before using your scooter, please read the instructions, and keep this manual for ready reference.
Original instructions

INMOTION

GETTING STARTED

Thank you for choosing the INMOTION electric scooter(hereinafter referred to as the scooter)! This scooter is an intelligent high-tech entertainment product. When you use the scooter, there may be situations such as falling or collision that can cause injury and other risks. To reduce possible risks and ensure the personal and property safety of yourself and others, you have the responsibility and obligation to carefully read the user manual, fully understand all the warnings and precautions listed in this manual, and ensure that you can use it correctly. To obtain the latest feature/function information and safety guidance, please download the electronic version from the official website. Important! Read carefully and keep for future reference.
Serial number (referred to as SN below) is a unique identifier for each product, which can be used for product warranty, maintenance, insurance claims, loss confirmation, and so on. The SN is a 16-character numeric code that can be found on the packaging box label, the body of the product, or in the device information section of the associated App.
Get closer to your seller so he can refer you to an Appropriate training organization.

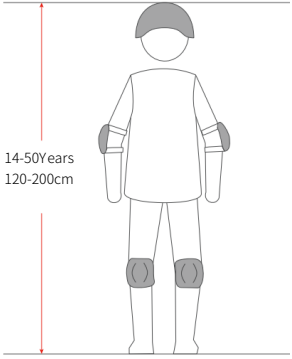

When riding an electric scooter, please wear a helmet, knee pads, elbow pads, wrist guards and other protective gear throughout the journey to reduce the risk of injury.
All pictures in this manual are for reference only. Please refer to the actual product for accuracy.

BRIEF INTRODUCTION

Check the Packing List

Please carefully check all components inside the packaging. If any components are missing, please consult your point of purchase.

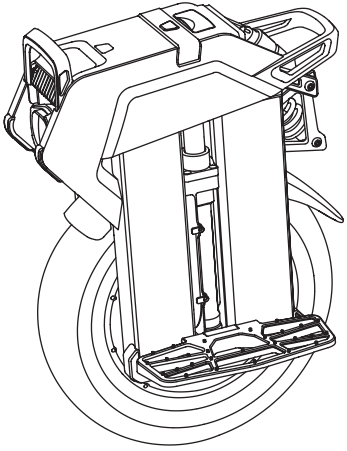

User Manual

Quick Start Guide

L-shaped wrench*1

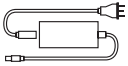

Power Cord /Adapter

Washers*2

M3 countersunk screws*4

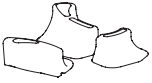

Set of powerpads (Individually packaged)

Set of battery corner protectors

Set of collision blocks

WARNING: Please keep the packaging box and packaging materials for at least 30 days for future use when transporting the electric unicycle.

DIAGRAM

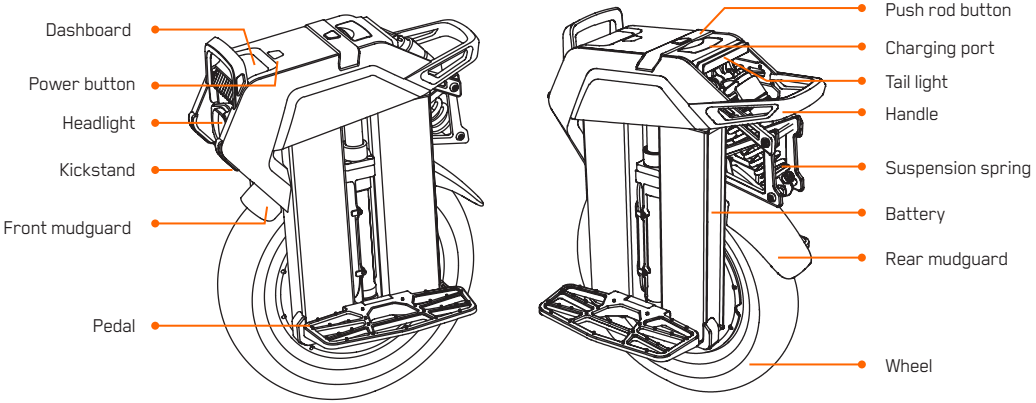

PRODUCT FEATURES INTRODUCTION

Power On/Off: Long press the power button to turn on the device. In the powered-on state, long press the power button to turn off the device.

Front Light: By default, the daytime running light is enabled when the device is turned on. In the powered-on state, short press the power button to turn the front light on/off.

Tail Light: When the front light is turned on, the tail light remains constantly lit. The tail light will flash brightly when braking.

Anti-spin Button: Press the power button twice to enter P mode, where the vehicle loses balance, and a prompt sound will be heard.

Power Assist: Enabling this mode helps you achieve a more comfortable acceleration and braking experience.

(1) Acceleration Assist: Adjust the value to achieve a more comfortable and rapid acceleration experience. A higher value results in faster acceleration.

(2) Braking Assist: Adjust the value to achieve a more comfortable and rapid braking experience. A higher value results in shorter braking distance.

Charging

The original charger is 134V⎓3A. The blue light indicates the power status, the green light indicates a full charge, and the red light indicates the charging status, indicating that it is currently charging/charging complete. When both chargers are used simultaneously, the charging time will be reduced by 50%. (The maximum input for charging the entire vehicle is 19.6A.)

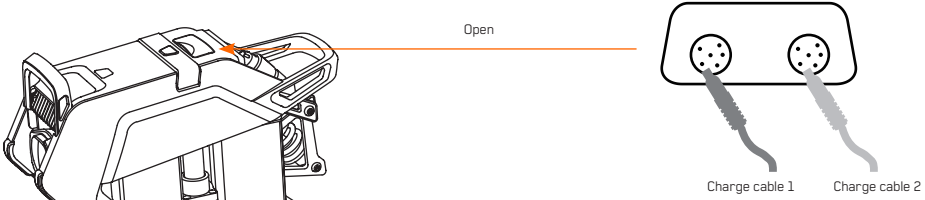

Warning:

- **Do not charge if there is water at the charging port or power cord.**
- **Please use the original adapter for charging.**
- **Do not charge indoors.**
- **Cover the lid tightly after charging.**
- **Do not charge if the battery is damaged or has been exposed to water.**
- **If not in use for a long time, it is recommended to charge once every three months.**

Charging

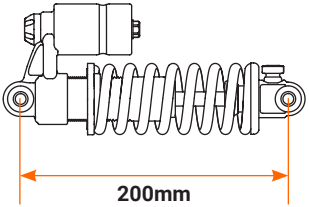

Pedal Angle Adjustment

Increase pedal angle: Align the M3 countersunk screw and washer with the screw hole below the pedal, and tighten using an L-shaped wrench.

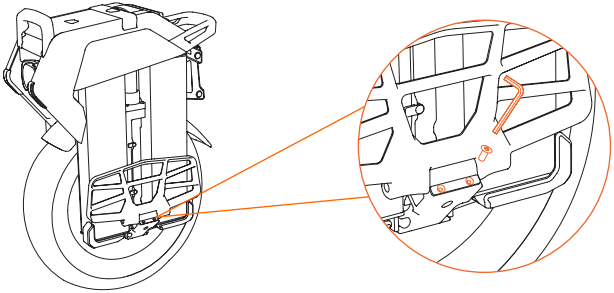

Push rod

Unfold the push rod: Press the push rod lock button, and the push rod will automatically spring up.
Fold the push rod: Press the push rod lock button, and then press the push rod down.

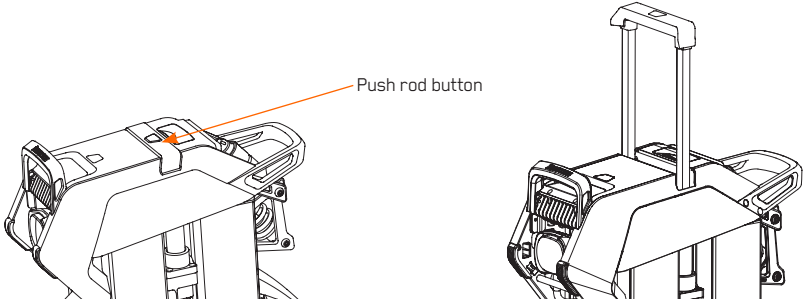

Dashboard

Display

Speed Unit: Switch the display unit in the app.

Battery Level: The battery indicator and the numerical display directly show the current battery level of the vehicle.

Gear: Switch between D/S modes in the app.

(1) D: Eco mode

(2) S: Drive mode

(3) P: Parking mode. Double-click the power button at startup to enter P mode.

Lock: Authenticated App accounts can lock the vehicle through the App.

Bluetooth: The Bluetooth icon lights up when connected.

Fault Icon: The fault icon lights up when there is a vehicle malfunction. Detailed fault information can be viewed by connecting to the app.

Headlight Icon: The headlight icon lights up when the headlights are turned on.

DIAGRAM

Specification	Item	Argument
Basic Specs	range（km)	80 [1]
	Charging time（h)	6.6h with single charger；3.3h with dual chargers
	Rated Power（KW)	5
	Max.Power（KW)	9
	Max.torque（N.M)	200
	Max.speed（KM/H)	70 [2]
	Max.slope（°)	50° [3]
	Suspension travel（mm)	85

[1]: fully charged, 75 kg payload, 25˚C, no wind, and cursing at the flat orad in 4km/h.
[2]: fully charged, 75 kg rider get the data through a large amount of tests.
[3]: fully charged, 75 kg payload, 25˚C, no wind, at the flat orad.

Specification	Item	Argument
Frame	Length*Width*Height（mm）	478*228*680
	Net weight（kg）	40
	Max. payload（kg）	140
	IP ratings	IP56
Battery Pack	Rated capacity（Wh）	2277
	IP ratings for battery	IP67
	Rated voltage（V）	115.2
	Smart BMS	Overcharging protection, over-temperature protection, over-discharge protection, overcurrent protection, short circuit protection, overvoltage protection, and etc.
Motor	Motor size	12inch
	Tire size (Outer cover)	3.00-12
	Tire pressure（BAR）	2.8BAR
	IP ratings for motor	IPX6
Charger	Chrger Input	AC 110-240V
	Charger output	DC 134.4V　3A
Configurationn	Charger interface	GX16-4
	Quantity of charger interface	2
Requirments	Working temperature（℃）	-10-45
	Storage temperature（℃）	-20-45

DIMENSION

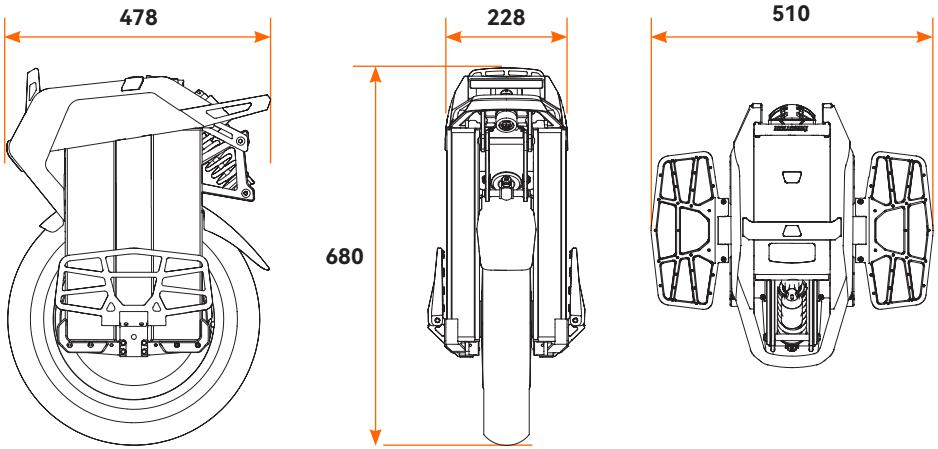

INITIAL USE

Before Use

Electric Unicycle is a high-tech recreation product. When you ride without following the operation specifications, it may lead to unpredictable injuries and property losses. The following will explain how to use Electric Unicycle and the precautions in details. Please read it carefully and use Electric Unicycle as required. Before using, please make sure that all parts of Electric Unicycle are not damaged and installed properly.

Warning:

- **Before using the Electric Unicycle, ensure that the battery is fully charged. It is recommended to charge it more than 80 percent of capacity.**
- **Find a relatively open and flat area to practice riding, (at least 4m by 4m in area), both inside and outside. You need to be fully aware of the riding environment around you to ensure that you are not disturbed by obstacles such as cars, pedestrians, pets, bicycles, etc.**
- **You need a skilled assistant stood by. The assistant must be familiar with Electric Unicycle and all precautions and usage methods in this manual.**
- **Please do not ride the vehicle on slippery ground.**
- **Users are advised to wear comfortable, casual or sports clothing, and to wear flats and warm up to improve your flexibility.**
- **Be sure to wear a helmet and riding protective gear to avoid injury.**

Download INMOTION App

Download the App in the following ways
1. Scan the QR code below
2. Search "INMOTION" in the Apple store or Google Play Store.
3. Visit www.inmotionworld.com/support/app

Tips:

Electric Unicycle supports Bluetooth 5.0 BLE. The BLE ID is Adventure-XXXXXXXX, where XXXXXXXX is the last 8 digits of SN.
Install the INMOTION App on your mobile device (iOS 8.0 and above or Android 4.4 and above supported) and follow the prompts to connect your Electric Unicycle.
For more functions, please visit the official website to download the latest version of INMOTION App user manual.

LEARNING TO RIDE

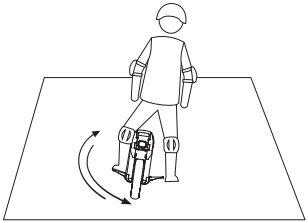

1. Step on the pedal with one foot, then swing back and forth.

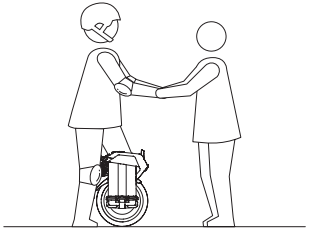

2. Step on the pedal with one foot, keep your feet and body upright and gradually shift your weight up.

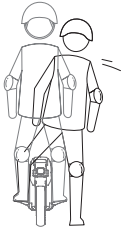

3. Step on the pedal with one foot, lift the other foot off the ground for 1-2 seconds and start gliding.

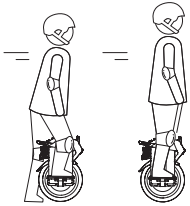

4. Step on the pedal with one foot, push back with the other foot and start gliding.

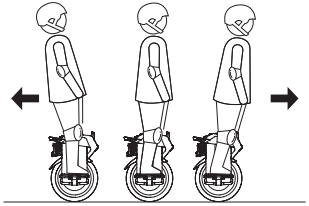

5. Step on pedals with both feet, use your weight to move forward and back.

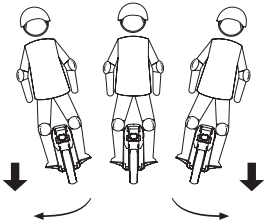

6. Press the pedals with feet by different force to make a turn.

SAFETY NOTICE

1. This product is an entertainment device and not a means of transportation. Riding on public roads is prohibited. When riding, be sure to comply with local laws and regulations.
2. Carefully read this user manual. If you are unable to ride the vehicle according to the instructions in this manual, do not attempt to ride the vehicle. Always wear a certified helmet and other protective gear when riding.
3. Riding the vehicle requires practice and mastery of corresponding riding skills. It is recommended to practice in closed and open areas such as residential areas, parks, and dedicated venues. For the first ride, do not select areas where children, pedestrians, pets, vehicles, bicycles, or other obstacles and potential dangers may appear. INMOTION Technologies Co., Ltd. will not be responsible for any damage caused by insufficient riding experience or failure to follow the instructions in this manual.
4. Following the prompts and warnings in this manual can reduce risks, but not eliminate all risks. Remember, there may be injuries or death risks due to loss of control, collision, and falls while using the vehicle. Do not exceed the speed limit, and do not ride on roads where motor vehicles are present under any circumstances.
5. Before lending the vehicle to others, make sure they have read this manual and understand the riding risks. You are responsible for ensuring the safety of new riders. Help them learn how to use the product until they have mastered the basic operation of this vehicle.
6. Do not place the vehicle near an open flame or high temperature. Unauthorized modification and repair of the vehicle can cause abnormalities and void the warranty.
7. If the vehicle has any abnormal conditions such as damage, strange smells, smoke, overheating, or performance failure of parts, immediately stop using it and contact customer service.
8. The product may contain detachable components. Keep them away from children to avoid harm caused by swallowing or ingestion.
9. Eliminate any sharp edges that may arise due to use of the vehicle.
10. No additional items not approved by the manufacturer shall be used.
11. The vehicle shall not be modified or reconstructed, including turning pipes and sleeves, stems, folding mechanisms, and rear brakes.
12. It is recommended that no modifications be made that are not specified in the manufacturer's manual.

RIDING INSTRUCTIONS

1. When riding this product, please comply with local laws and regulations and policy requirements. It is prohibited to use it in areas where entry is prohibited by local laws and regulations or related management units.
2. When riding, please respect the right of way of pedestrians. Pass on the left side of pedestrians as much as possible. When facing pedestrians, keep to the right and slow down. Avoid alarming pedestrians, especially the elderly, children, disabled people, and pregnant women. When approaching pedestrians from behind, remind them and slow down when passing.
3. Do not drive when fatigued. When riding, make sure you and others are visible. Please pay attention to maintaining a sufficient safe distance from pedestrians or other vehicles to avoid the risk of collision. Therefore, when you approach or pass through crowded pedestrian areas, intersections, or turning points, please slow down, yield to pedestrians and other vehicles.
4. Please do not suddenly accelerate or decelerate. Whenriding, always stand on the pedals with both feet. Stunts are prohibited. Do not drive at speeds exceeding the vehicle's limit, otherwise, there may be a risk of losing control, collisions, and falls.
5. Please do not turn while riding at high speed or suddenly brake. The above actions can easily cause danger (such as slipping and falling). Be sure to slow down when turning. High-speed turns can lead to loss of control, which may cause the vehicle to overturn and there is a risk of injury or death.
6. Do not use headphones, earplugs, mobile phones, handheld shooting equipment, or engage in any activity or behavior that may distract your attention while riding a bicycle so that you can better monitor the external environment.
7. Please do not ride under the following conditions, including but not limited to: severe weather, low visibility, night, darkness. Each of the above conditions will increase the risk of accidents.
8. For any reason, please do not ride a bicycle in snowy, rainy, slippery roads, muddy roads, or icy conditions. The resistance of tires on wet or slippery roads decreases and the braking distance increases, making it easier to slip or lose control. When riding in rainy or snowy weather, the vehicle may become waterlogged, leading to functional damage, fires, or even explosions due to damp batteries. Damage and losses caused by water ingress are not covered by the warranty.
9. When riding, please avoid obstacles, potentially dangerous road surfaces, and difficult-to-cycle road surfaces (including but not limited to wet and slippery surfaces, ice surfaces, swimming pools and other water areas, loose sand or dispersed material surfaces, steps and nearby areas, and uneven surfaces).
10. When you approach pedestrians or cyclists, notify them of your presence when you are not seen or heard.
11. When approaching or crossing intersections, street corners, or any type of gate, be sure to slow down.
12. Do not ride at unsafe speeds. You must make the correct judgment based on your driving skills and surrounding environment.

13. Push a bicycle through a pedestrian crossing.
14. Do not touch moving or rotating wheels.
15. In order to ride safely, you must be able to see what is in front of you, and you must be visible to others.
16. Riders must be able to hear their surroundings.

⚠ Warning:

- **The rider requests that this product be used by users aged 14 to 50. Minors need to use it under adult supervision.**
- **Riders should wear safety protective gears such as helmets, knee pads, and elbow pads. Please use a qualified helmet and fasten the strap in the appropriate position under the chin.**
- **Personnel who are not suitable for riding this vehicle include:**
- **Persons under the influence of alcohol or drugs;**
- **Persons who cannot engage in strenuous physical activity due to illness;**
- **Persons with physical, sensory, or mental defects or lack of experience and knowledge;**
- **Persons who cannot maintain balance;**
- **Persons whose weight exceeds the prescribed limit (see "Basic Parameters");**
- **Children under 14 years old;**
- **Pregnant women.**
- **This product is limited to single-person riding. It is forbidden for two or more people to ride at the same time, and it is forbidden to ride with children or heavy objects.**
- **Shoes must be worn while riding. High-heeled shoes, slippers, and open-toed shoes are prohibited. Tie long hair up to avoid accidents caused by obstructed vision during normal riding.**
- **It is strongly recommended to wear protective goggles while riding to prevent dirt, dust, or insects in the air from causing eye damage, affecting normal riding, and causing accidents.**

Daily Riding Inspection

1. Before riding, please read this user manual carefully.
2. Before riding, make sure you have sufficient physical and mental conditions to ride the vehicle normally without assistance and control the vehicle.
3. Before each ride, carefully inspect the vehicle and regularly check the tightening of various bolts and components, especially the wheel axles, folding system, steering system, and brake axles.
4. Ensure that there are no loose or damaged parts, component failures, insufficient tire pressure, or other abnormal conditions, and ensure that the brakes are working properly. If there is any unusual smell, noise, or alarm from the vehicle, please stop using it immediately and diagnose it through the INMOTION App or contact the after-sales service (phone: 4000-1000-12 extension 8015; email: service@imscv.com; AmazonService@imscv.com) or the after-sales service of the purchase channel to obtain professional technical guidance or maintenance services.
5. Before each ride, check the battery level to ensure sufficient power to maintain normal riding and avoid danger.
6. It is recommended to park on a flat and firm surface. If parked on a slope, the scooter kickstand must face the downhill to prevent tipping over. After lowering the kickstand, please check whether the vehicle is stable to prevent the vehicle from tipping over due to external interference such as sliding, wind or shaking. Do not park in busy areas. It is recommended to park near the wall.
7. Parking without turning off the power may cause the vehicle to move spontaneously, causing damage to you, people around you or property. Therefore, be sure to turn off the power before parking.

Other

1. Only use original or Approved parts and accessories from INMOTION. Do not modify your scooter. Modifying your scooter may affect its operation, leading to serious damage and invalidating the warranty.
2. For a better riding experience, it is recommended that you regularly maintain the product (see "Maintenance Plan").
3. Children should not use scooters, play with scooter parts, or perform cleaning or maintenance activities.

MAINTENANCE

Cleaning

Use a soft damp cloth to wipe the scooter frame clean. If there are stubborn stains, Apply toothpaste and brush repeatedly with a toothbrush, then clean with a soft damp cloth.

Warning:

- **Before cleaning, make sure the vehicle is turned off and the charger is unplugged, and the charging port cover is securely fastened, otherwise, electronic components could be damaged.**
- **Please do not use alcohol, gasoline, kerosene, or any other corrosive or volatile solvent to clean your scooter. These substances may damage the appearance and internal structure of the vehicle. The use of a pressure washer or hose for spraying and rinsing is prohibited.**

Storage

When not in use, park the vehicle indoors or store it inside to avoid damage from rain, snow, and other harsh weather conditions. This product should be stored in a cool, dry place and not left outdoors for an extended period of time.

Warning:

- **Exposure to direct sunlight and extreme temperature conditions (too hot or too cold) will accelerate the aging of plastic components and may reduce battery life.**

Battery Maintenance

⚠ Warning:

- Use the original charger and battery pack. Do not use other models or brands of chargers and battery packs, as this may pose a safety risk.
- Do not exceed the specified temperature limit (see "Technical Specifications") when storing or charging the battery.
- Do not touch the battery contacts, and do not open or puncture the casing. Avoid short-circuiting the battery contacts with metal objects, as this may cause damage to the battery or even harm to individuals.
- Do not throw the battery pack into fire, as this may cause the battery to malfunction, overheat, and even catch fire.
- Keep the battery out of reach of children and animals, and avoid charging near flammable materials.
- Do not charge the scooter in a damp environment.
- If the battery is damaged or gets wet, do not charge or continue using the battery.
- Do not remove the battery. Disassembling the battery is complex and may affect the operation of the vehicle.
- Do not attempt to disassemble the battery, as there is a risk of fire. Users are not allowed to repair the parts contained in this product by themselves.
- Do not ride the scooter in an environment where the ambient temperature exceeds the operating temperature of the product (see "Technical Specifications"), as both low and high temperatures will limit the maximum power output and may cause slipping or falling, resulting in personal injury or property damage.
- After each use, charge the battery to 60%-80% and store it, which is beneficial for extending the battery life. Completely depleting the battery may permanently damage it, so please avoid completely depleting the battery.
- Improper disposal of waste batteries can seriously pollute the environment. When disposing of waste battery packs, please comply with local regulations. Do not discard waste battery packs at will to protect the natural environment.

Tips:

- The battery will continue to discharge even when the vehicle is turned off. If the vehicle is not used for a long time, it is recommended to keep the battery at a level of 60% or higher and charge it every 30-60 days, otherwise, the battery may be overly discharged, resulting in decreased battery performance. The battery has an intelligent chip inside that records the charging and discharging status of the battery. Damage caused by overcharging or over-discharging the battery is not covered under the warranty.
- A well-maintained battery pack can maintain good operating condition even after traveling many miles. When used at room temperature (25°C), the battery's endurance and performance are optimal. However, when used at temperatures below 0°C, the battery's endurance and performance may decrease. Generally, low temperatures affect the product's endurance, and the lower the temperature, the shorter the range.

⚠ Warning:

- **Do not use this product near water.**
- **Please stop using the product if it is damaged.**
- **Keep plastic covers away from children to prevent choking.**
- **Fire and electrical hazards - No user-serviceable parts.**
- **Using the product in damp weather will increase braking distance.**
- **Brakes may become hot during use. Do not touch after use.**
- **Only use the detachable power unit that comes with this device to charge the batteries.**
- **This vehicle contains non-replaceable batteries. The vehicle must be used with the battery charger provided with it.**
- **Like any mechanical part, vehicles are subject to high stress and wear. Different materials and components may have different reactions to wear or fatigue. If a component exceeds its expected lifespan, it may suddenly break, potentially causing injury to the user. Cracks, scratches, and discoloration in high-stress areas indicate that the component has exceeded its useful life and should be replaced.**

Mark Explanation

	To reduce the risk of injury. User must read instruction manual.	CE	CE certification
	General warning sign	UK CA	UK certification
	Warning; Electricity		Waste electrical products should not be disposed of with household waste. Take to an authorized recycler.
	Warning;Hot surface		Waste electrical products should not be disposed of with household waste. Take to an authorized recycler.
	Warning; Pinch Point	FC	Federal Communications Commission in the USA

Certifications

European Union Compliance Statement
Information on Disposal for Users of Waste Electrical & Electronic Equipment

This symbol on the product or on its packaging indicates that used electrical and electronic products should not be mixed with unsorted municipal waste. For proper treatment, it is your responsibility to dispose of your waste equipment by arranging to return it to designated collection points.
Disposing of this product correctly will help save valuable resources and prevent any potential negative effects on human health and the environment. which could otherwise arise from inappropriate waste handing.
Penalties may be applicable for incorrect disposal of this waste, in accordance with your national legislation.
Please contact your local authority for further details of your nearest designated collection point.

Battery recycling information for the European Union

This symbol means that batteries and accumulators, at their end-of-life, should not be mixed with unsorted municipal waste Your participation is an important part of the effort to minimize the impact of batteries and accumulators on the environment and on human health. For proper recycling you can return this product or the batteries or accumulators it contains to your supplier or to a designated collection point.
Disposing of this product correctly will help save valuable resources and prevent any potential negative effects on human health and the environment. which could otherwise arise from inappropriate waste handling.
Penalties may be applicable for incorrect disposal of this waste.in accordance with your national legislation. There are separate collection systems for used batteries and accumulators.
Please, dispose of batteries and accumulators correctly at your local community waste collection/recycling center.

Radio Equipment Directive

Declare that the product listed in this section comply with the essential requirements and other relevant provisions of the Radio Equipment Directive 2014/53/EU.

Restriction of the use of certain hazardous substances (RoHS) Directive

Declare the whole product including parts(cables. cords,and so on) meets the requirements of RoHS Directive 2011/65/EU and amendment Commission Delegated Directive (EU) 2015/863 on the restriction of the use of certain hazardous substances in electrical and electronic equipment("RoHS recast" or "RoHS 2.0").

Machinery Directive

Declare that the product listed in this section comply with the essential requirements and other relevant provisions of the Machinery Directive 2006/42/EC.

Declare that the product model: POSE complies with the essential requirements and other relevant provisions of the Radio Equipment Directive 2014/53/EU. the machinery directive2006/42/EC. and the RoHS Directive 2011/65/EU and amendment Commission Delegated Directive (EU)2015/863 The declaration of conformity can be viewed at the following address: www.inmotionworld.com.

UK Compliance Statement

Radio Equipment Regulations 2017
Declare that the product listed in this section comply with the essential requirements and other relevant provisions of Radio Equipment Regulations 2017.
The Restriction of the Use of Certain Hazardous Substances in Electrical and Electronic Equipment Regulations 2012.
Declare the whole product including parts (cables, cords and so on) meets the requirements of The Restriction of the Use of Certain Hazardous Substances in Electrical and Electronic Equipment Regulations2012.

Declare that the product mode: POSE complies with the essential requirements and other relevant provisions of the Radio Equipment Regulations 2017 Supply of Machinery (Safety) Regulations 2008 and the Restriction of the Use of Certain Hazardous Substances in Electrical and Electronic Equipment Regulations 2012. The declaration of conformity can be viewed at the following address: www.inmotionworld.com.

Bluetooth	Frequency Band(s)	Frequency Band(s)
	Max. RF Power	20 mW

FCC STATEMENT :

This device complies with Part 15 of the FCC Rules. Operation is subject to the following two conditions:

(1) This device may not cause harmful interference, and

(2) This device must accept any interference received, including interference that may cause undesired operation.

Warning: Changes or modifications not expressly approved by the party responsible for compliance could void the user's authority to operate the equipment.

NOTE: This equipment has been tested and found to comply with the limits for a Class B digital device, pursuant to Part 15 of the FCC Rules. These limits are designed to provide reasonable protection against harmful interference in a residential installation. This equipment generates uses and can radiate radio frequency energy and, if not installed and used in accordance with the instructions, may cause harmful interference to radio communications. However, there is no guarantee that interference will not occur in a particular installation. If this equipment does cause harmful interference to radio or television reception, which can be determined by turning the equipment off and on, the user is encouraged to try to correct the interference by one or more of the following measures:

Reorient or relocate the receiving antenna.

Increase the separation between the equipment and receiver.

Connect the equipment into an outlet on a circuit different from that to which the receiver is connected.

Consult the dealer or an experienced radio/TV technician for help.

RF warning statement:

The device has been evaluated to meet general RF exposure requirement. The device can be used in portable exposure condition without restriction.

TRADEMARK AND LEGAL STATEMENT

Personal Information Statement

1. Your personal information refers to all the information voluntarily entered by you when registering and authenticating with the INMOTION App and connecting with the unicycle.
2. During the use of the App, the personal information you provide in car owner authentication, product serial number activation, surveys, after-sales tracking and follow-up, and activity participation related to the product or service is for us to provide you with better products and services, and to improve and enhance your user experience.
3. You have the right not to provide personal information, but if you do not provide certain personal information, we may not be able to provide you with better products and services, and it may even affect your use of our products.
4. If you provide any personal information, it is deemed that you fully agree that INMOTION can use and disclose it to affiliated companies. The use of INMOTION and affiliated companies includes but is not limited to internal employees, consultants, agents, suppliers, and partners.
5. You agree that we may provide your personal information to relevant third parties under any of the following conditions:
6. With your special authorization;
7. In compliance with relevant laws or mandatory requirements proposed by government agencies (including judicial authorities);
8. To enforce available service terms (including investigating possible violations);
9. To deal with fraud, security or technical issues;
10. To protect the rights, property or safety of users or the public from harm within the scope required or permitted by law;
11. In special and/or urgent circumstances.
12. The use, transmission, and storage of your personal information includes electronic data methods, and the above actions may be located inside or outside China.
13. For your better use and experience, you fully agree that INMOTION and affiliated companies may push information about products, services, and related activities to you irregularly.
14. To protect the security of your personal information, we will adopt reasonable and secure measures to protect your personal information from unauthorized disclosure and use, and we will also urge other relevant parties who accept and use your personal information to fulfill the same obligations as stated in this legal statement. You agree that INMOTION will determine the storage and retention time of your personal information according to the required time for the purpose of use or any agreement, laws, and regulations.
15. You agree to fully exempt INMOTION and/or receiving parties and/or using parties from all claims, responsibilities, and losses caused by or may be caused by disclosing and using your personal information in accordance with this legal statement, unless the aforementioned claims, responsibilities, and losses are directly caused by the receiving party and/or using party's intentional act or gross negligence.

Trademark Statement

1. INMOTION is a registered trademark of Shenzhen INMOTION Technologies Co., Ltd.; Android is a trademark of Google Inc.; App Store is a service mark of Apple Inc.; other trademarks mentioned in this document belong to their respective owners.
2. This manual has included as much feature description and usage instructions as possible in printing. However, due to product function constantly improving, design changes, etc., there may still be discrepancies with the product you purchased. Due to product updates, there may be some deviations between this manual and the actual product in color, Appearance, and other aspects. Please refer to the actual product. Shenzhen INMOTION Technologies Co., Ltd. is not responsible for any claims, liabilities, and losses caused by or may be caused by consumers or any third party violating this legal statement.
3. Shenzhen INMOTION Technologies Co., Ltd. reserves all rights.
   Manufacturer: Shenzhen INMOTION Technologies Co., Ltd.
   Address: 18th Floor, Block B1, Nanshan iPark, No.1001 Xueyuan Avenue, Nanshan District, Shenzhen, Guangdong.
   Product Performance Standard: Q/LXTX 002-2017.

Intellectual Property Statement

1. Unless otherwise provided by laws and regulations or agreed upon by agreement, INMOTION reserves all rights to the intellectual property (including but not limited to copyright, trademark right, patent right and its application right, implementation right, licensing right, etc.) involved in the products, attachments, Apps, websites, and any illegal use or disposal is prohibited without prior written permission from INMOTION.
2. This legal statement is applicable to the laws of the People's Republic of China.
3. INMOTION shall not be liable for any claims, liabilities, or losses caused or potentially caused by consumers or any third party's violation of this legal statement.
4. This legal statement is an inseparable and mandatory part of INMOTION's products (please transfer it together when reselling the product).
5. You may choose to accept all the terms of this legal statement and use INMOTION's products. If you use INMOTION's products, it is deemed that you agree to accept all the terms of this legal statement and assume any possible risks and liabilities.
6. If you do not agree to accept all the terms of this legal statement after purchasing our products, please return the product intact and undamaged, ensuring that it does not affect secondary sales.
7. Thank you for choosing and trusting INMOTION. If you have any questions, we are always willing to serve you!

Contact Us

If you have any issues related to riding, maintenance, and safety, or if your scooter has an error/fault, please contact us.
Shenzhen INMOTION Technologies Co., Ltd.
Address: 18th floor, B1, Nanshan iPark, No.1001 Xueyuan Avenue, Nanshan District, Shenzhen, China.
Telephone: 4000100012 extension 8015.
Email Service: service@imscv.com.
Email for Amazon US Services: AmazonService@imscv.com.
Website: www.inmotionworld.com.
INMOTION App: Me → Online Service.

Notice:

- **When contacting INMOTION, please provide the serial number of your corresponding vehicle. You can find your vehicle's serial number on the vehicle nameplate or in the "Vehicle Management" → "About Vehicle" section of the App."**

INMOTION App

Facebook group

Website