Laser Projection keypad

User Manual

BEL-KB560

FCC ID:2ADX5BEL-KB580

All other products are trademarks or registered trademarks of their respective companies.

Please refer to host device instruction manual for Bluetooth pairing information.

CONTENTS

1. Product Overview..... 2
2. How This Product Works..... 8
3. Product Features..... 2
4. Package Contents..... 2
5. Safety Precautions.....3
6. Identifying Parts and their Functions..... 11
7. Connecting via Bluetooth.....13
8. Special Function of “SHIFT” Key.....16
9. Power Saving Mode Guide.....17
10. Making Adjusting.....18
10. Mouse Mode.....18
12. Spectifcation.....19

1. Product Overview

This projection keyboard will work via Bluetooth HID. connection to main devices, like Tablet PC, Smartphone, Desktop PC and Video game . As a new input device, using the built-in infrared laser transmitter to project the standard keyboard on the working surface , you can locate the click position and input the information by the method of optical identification. Without physical keyboard, small size, easy to carry, this projection keyboard can adapt to most of the working environment.

2. How This Product Works

This product emits infrared light from the lower end of the product to detect objects such as fingers. When an object passes through the are illuminated by the infrared light source, any infrared light reflecting off an object is detected by the sensor.
Information on the position and movement of the object is then analyzed to perform the product’s role as a keyboard.

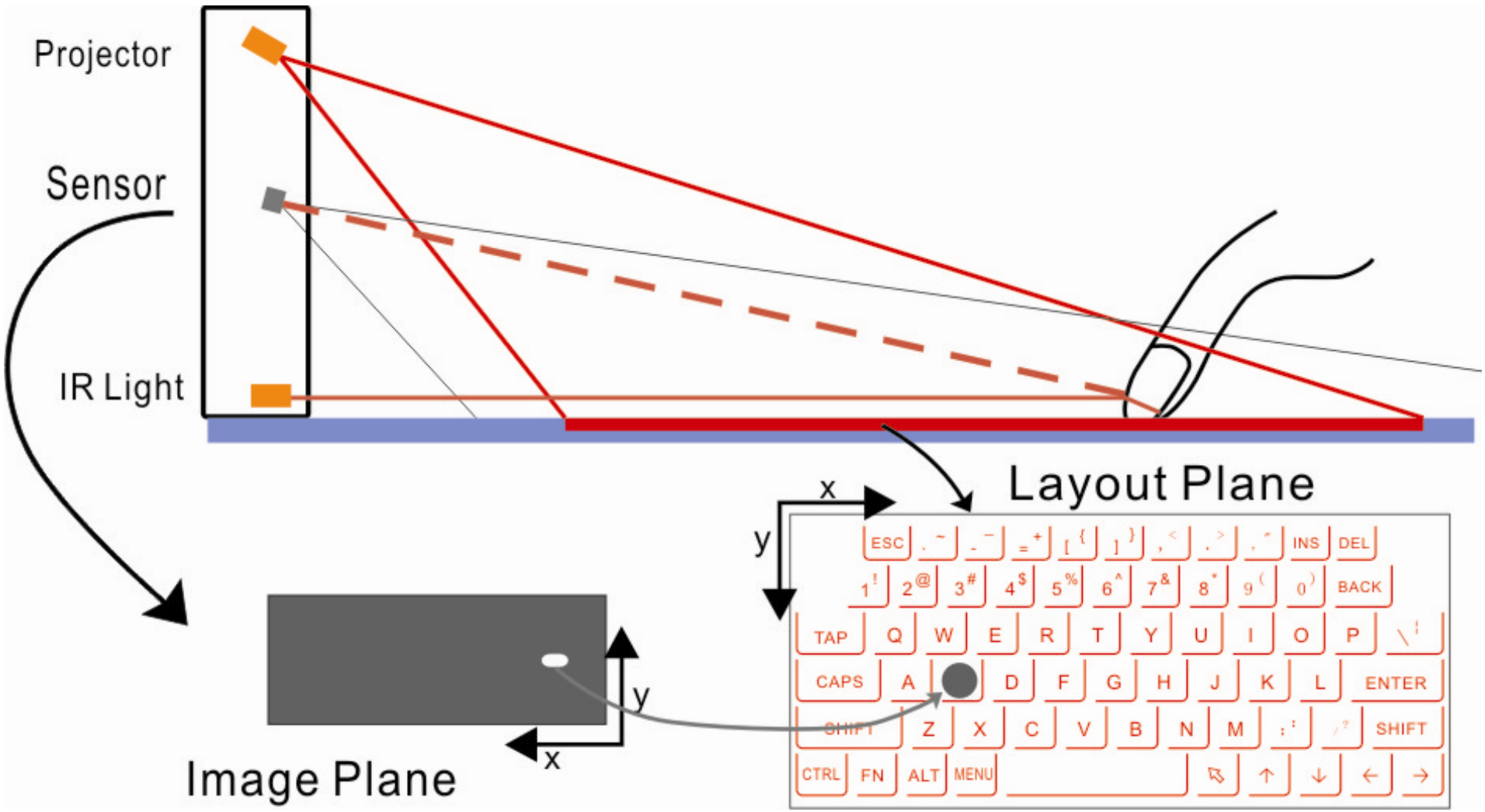

Conditions to Avoid

1. Avoid direct sunlight.
2. Avoid low color temperature light source, such as tungsten, halogen, or incandescent lamp.
3. Avoid uneven or irregular surfaces. Place the product on flat surfaces.
4. Avoid a table or surface that is as transparent or reflective as glass or mirror.
5. Avoid placing any objects within the space between the main unit and the laser projected keyboard layout.

Because this product uses infrared rays, strong infrared radiation from direct or reflected sunlight or from tungsten (halogen or incandescent) lighting may cause operating error.

CAUTION

Although this equipment is classified as Class 2 laser product, for your safety, do not directly expose your eyes to pattern projection beams orinfrared rays.

3. Product Features

- English QWERTY keyboard layout.
- Truly portable design:perfect for on-the-go
- Full size key pitch and shortcut keys for ease of operation
- Superior durability (No moving component inside)
- Built-in Lithium-ion Polymer rechargeable battery for mobility and convenience
- Compatible with latest operating systems: Windows XP & later, Windows Phone 7 & later, iOS4 and later, Android 2.1 and later, Mac OS X & later.

4. Package Contents

- Laser projection keyboard
- USB Cable
- User’s Manual
- Quick Start Guide

5. Safety Precautions

1. Avoid exposing this product to direct sunlight for extended periods of time, and keep it away from heat sources.
2. There is a risk of malfunction if product is used in places where sudden or extreme temperature changes occur.
3. Applying excessive force or impact to this product may result in product damage, and will void warranty.
4. To ensure safety and prevent damage, use only the dedicated micro-USB to USB cable supplied with this product.
5. Never attempt to disassemble or service this product yourself. Doing so can result in electrical shock and will void the warranty.
6. This is a Class 2 Laser product. For your safety, please do not stare directly

into the laser source. Doing so could damage your eyes.

7. Avoid placing any object within the space between the main unit and the laser projection keyboard layout.
8. Please do not use this product on uneven or irregular surfaces. Place the product on a flat surface. Avoid table or surface that is as transparent or reflective as glass or mirror.

Environmentally Friendly Disposal and Recycling

This product does not contain any substances known to be hazardous to human health. To protect the environment, dispose of this product separately from household waste once it has reached its end of life,or take it to your nearest electronics recycling service center.

About the Built-in Battery

Rechargeable Lithium-ion Polymer Battery :
Battery Operating Time: Approx. 120 minutes (with continuous use)
Capacity: 700mAh (Max) @ 3.7V
Charging the Battery: Use supplied USB cable to begin charging the battery.

Charging Time: Approx. 120 minutes

Note

Charging time increases if product is used while charging. When product in extremely low on power,it needs to charge for up 5 minutes before you can use it.

Cautions

1. For safety reasons, be sure to use only the microUSB to USB cable specified for this product.
2. Make sure to fully charge the battery before using the product for the first time.
3. Battery charging times may vary slightly depending on the ambient temperature.
4. The battery may not be charged to 100 percent of its rated cell capacity even when the charging indicate LED goes out.
5. Using or storing the battery in high temperature, humidity and pressure environments may cause the battery to explode.
6. Since the battery is a consumable item, its storage capacity decreases gradually as time passes.

6. Identifying Parts and Their Functions.

1. Projector: Uses a red laser to project the image of a keyboard onto a flat surface in front of the typist.
2. Sensor: Picks up the infrared light reflected off the typist's fingers and triangulates the location of the reflected light to determine which key was pressed. This sensor provides a keyboard function.
3. IR Light: Uses an infrared laser to emit an invisible plane of light a few millimeters above the projection surface so that the infrared light can be reflected off of the typist's fingers to the sensor.

LED Indicator

Left LED	
Searching bluetooth device	Blue(Blinking)
Seccessfull pairing	Blue out
Low battery	Red(Blinking)
Battery charging	Red

Right LED	
"SHIFT" Tap	Blue
"SHIFT" Cancel	Bleu out
Text Input	Blue(Blinking)

Charge Complete	Red out

FRONT VIEW

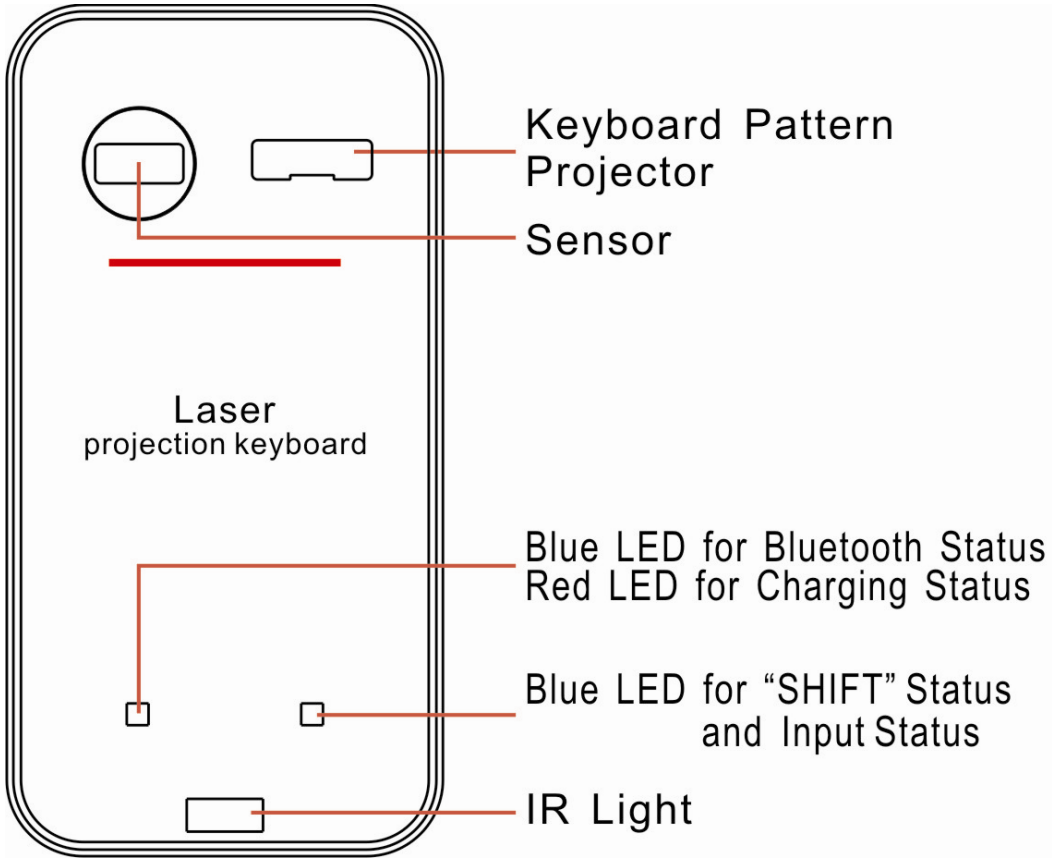

SIDE VIEW

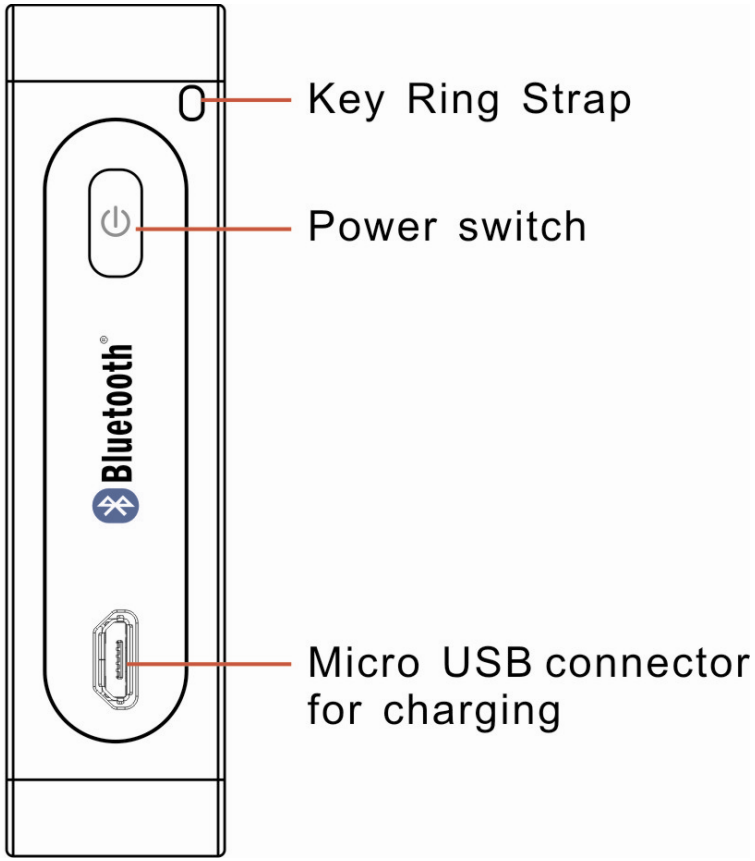

7. Connecting via Bluetooth

- Projection Keyboard supports Bluetooth HID:
- Connection via Bluetooth HID does not require installation of separate driver as long as the host device has HID compatibility.
- Bluetooth 3.0 or higher required for connecting to some devices.

Projection Keyboard will automatically attempt to re-connect to the recently connected devices. If no previous device is found then it will listen for a new connection with any available HID compatible device.

Bluetooth HID Compatible Devices

- iOS4 and later
- Android 2.0 and later

- Windows XP/Vista/7/8 or higher
- Windows Phone 7/8 or higher
- Mac OS (using Keyboard only)
- Blackberry 10
- PS3

Bluetooth Connection Instruction

1. Power on Projection Keyboard
2. Left blue LED will be blinking indicating the Projection Keyboard is searching for a new device or previously paired devices within its proximity . Projection Keyboard will automatically attempt to re-connect to the recently connected devices

This feature is added for convenience, assuming there is a single host device.

If the Projection Keyboard has re-connect the recently connected devices but it need pair for a new device, Turn the connected device Bluetooth off, the left blue LED will be blinking again.

3. On primary device,go to Bluetooth setting;search for Bluetooth devices.
4. When the device discovers”Laser projection keyboard”,tap to connect.
5. Upon successful pairing, the LED will stop blinking and go out.

Screen shot of successful Pairing on **iOS**

Screen shot of pairing on **Android**

8. Special Function of “SHIFT” Key

Normally we need press “Shift” key all the time on the normal keyboard. To improve projection keyboard typing convenience and accuracy, this product has special using method. We need type “Shift” key only one time and the function of shift will keep. meanwhile the right LED light turn blue, which we called “locking shift”. Press “Shift” key again to cancel the shift function, meanwhile the right blue LED light will stop.

If the right LED is keeping blue, which means “Shift” key has been locked.

9. Power Saving Mode Guide

- The brightness will change to low level if there is no operation on the keyboard within 30 seconds.

Press any key to resume to standard brightness.
Factory default brightness is the highest level during power on.

- The product will be automatically standby if there is no operation on the keyboard within 5 minute.

Press Power Switch to restart the product.

10. Making Adjustments

>Sound Feedback Ajustment

- There are total of 5 levels;sound level remains as adjusted when device is turned off and on.
- To incease sound level:Tap and hold “Alt” key and tap ”RIGHT” arrow key.
- To decrease sound level:Tap and hold “Alt” key and tap ”LEFT” arrow key.

>Projection Brightness Adjustment

- There are total of 4 brightness levels.
- To increase brightness:Tap and hold “Alt” key and tap “UP”arrow key.
- To decrease brightness:Tap and hold “FN” key and tap “DOWN”arrow key.

Note: All adjustments must be repeated for each level.

11.Mouse Mode

To change keyboard mode to mouse mode on the keyboard, press the key. The projection keyboard brightness will change to low level.

To Change mouse mode to keyboard mode, on the keyboard, press the key. The projection keyboard resume to standard brightness.

+Mouse/cursor function is available on devices that support such feature (Most Windows,Android and Mac OS).

Note: iOS devices do not support mouse function.

Mouse function is only available on devices that support cursor/mouse function

Default mode on power on is keyboard function

Control the cusor

Click

Drag & Scroll

Right Click

12. SPECIFICATION

Pattern Projector

Item	Specification
Light Source	Red Laser Diode
Keyboard Layout	Approx. 19mm Pitch, QWERTY Layout
Keyboard Size	Approx. Width : 240mm, Height: 100mm
Keyboard Location	Approx. 80mm from the bottom of device
Project Surface	Non-reflective, opaque flat surface

Keyboard Sensor

Item	Specification
Recognition Rate	Approx. up to 350 characters per minute
Operating Surface	Any firm flat surface

Electrical Characteristics

Item	Specification
External Power Supply	USB Power / less than 5V 500mA
Battery & Capacity	Lithium-ion Polymer Battery, 700mAh(MA X) @ 3.7V
Battery Operating Time	Approx. 120min
Battery Charging Time	Approx. 120min
Bluetooth	V3.0
Frequency Range	2402-2480MHz
Channel	79
Modulation	GFSK

Environmental Conditions

Item	Specification
OperatingTemperature	0 ~ 35°C / 90%RH
Storage Temperature	-5 ~ 35°C / ~90%RH

Dimensions and Weight Specifications

Item	Specification
Size (mm)	78mm x 40mm x 20mm
Weight (g)	Approx. 60 g

This device complies with part 15 of the FCC rules. Operation is subject to the following two conditions:
(1) this device may not cause harmful interference, and
(2) this device must accept any interference received, including interference that may cause undesired operation.

Changes or modifications to this unit not expressly approved by the party responsible for compliance could void the user's authority to operate the equipment.