User Manual

WiFi Modular

1. General Description

This document is to specify the product requirements for 802.11a/b/g/n/ac USB Module. This Card isbased on Realteak RTL8812AU chipset that complied with IEEE 802.11b/g/n/ac Draft 3.0 compatible WLAN ,and it is also backward complied with IEEE 802.11a standard from 5.15~5.825GHz wideband and IEEE 802.11b/g standard from 2.4~2.5GHz. It can be used to provide up to 54Mbps for IEEE 802.11a and IEEE 802.11g, 11Mbps for IEEE 802.11b and 150Mbps for IEEE 802.11n and 433.3Mbps for IEEE 802.11ac to connect your wireless LAN.

With seamless roaming, fully interoperability and advanced security with WEP standard, 802.11 a/b/g/n/ac USB Module offers absolute interoperability with different vendors 802.11a/b/g/n/ac. Access Points through the wireless LAN.

2. Features

Compatible with IEEE 802.11b standard to provide wireless 11Mbps date rate.
Compatible with IEEE 802.11g standard to provide wireless 54Mbps date rate.
Compatible with IEEE 802.11n standard to provide wireless 300Mbps date rate.
Compatible with IEEE 802.11ac standard to provide wireless 866.3Mbps date rate.
Operation at 2.4~2.5GHz and 5.15~5.825GHz frequency band to meet worldwide regulations
Provides simple legacy and 20MHz/40MHz/80MHz co-existence mechanisms to ensure backward
and network compatibility.
Supports infrastructure networks via Access Point and ad-hoc network via peer-to-peer
communication
Supports IEEE 802.11i (WPA and WPA2), WAPI, enhanced security
Friendly user configuration and diagnostic utilities
Drivers support Windows XP,Vista.Win7
High speed USB 2.0 interface
RoHS compliant

3. Application Diagrams

3.1 Functional Block Diagram

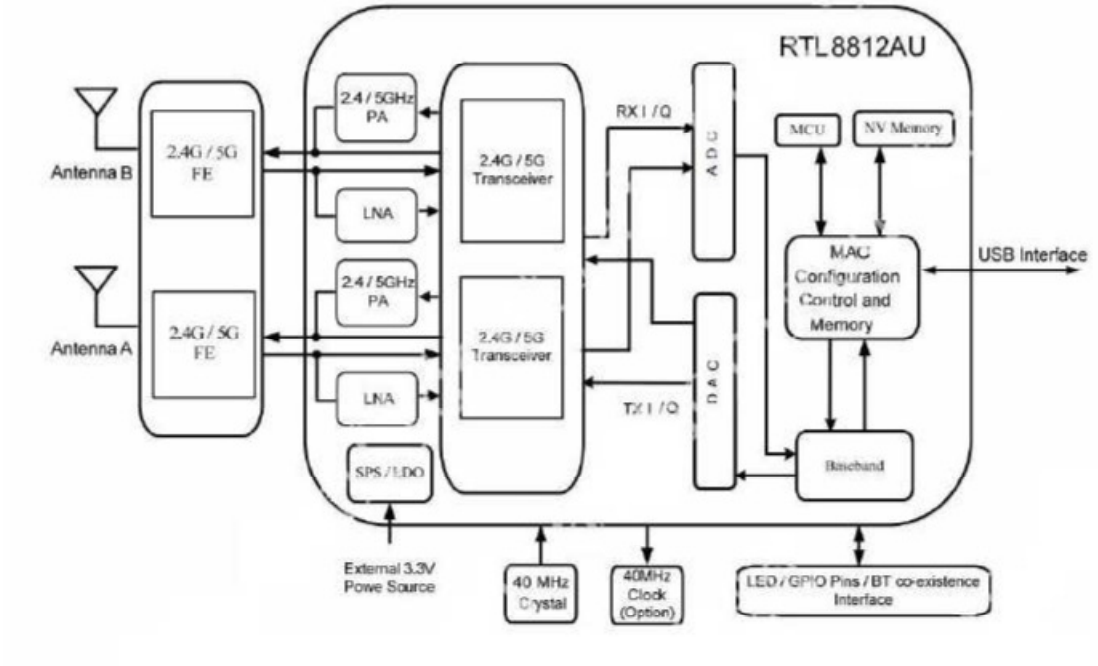

3.2 General Requirements

3.2.1 IEEE 802.11b Section

	Feature	Detailed Description
3.2.1.1	Standard	• IEEE 802.11b
3.2.1.2	Radio and Modulation Schemes	• DQPSK , DBPSK , DSSS , and CCK
3.2.1.3	Operating Frequency	• 2400 ~ 2497MHz ISM band
3.2.1.4	Channel Numbers	• 11 channels for United States • 13 channels for Europe Countries • 14 channels for Japan
3.2.1.5	Data Rate	• 11,5.5,2,and 1Mbps
3.2.1.6	Media Access Protocol	• CSMA/CA with ACK
3.2.1.7	Receiver Sensitivity at Antenna Connector	• Typical Sensitivity at Which Frame(1000-byte PDUs)Error Rate=8% • -76 dBm at 2Mbps • -76 dBm for 11Mbps

3.2.2 IEEE 802.11g Section

	Feature	Detailed Description
3.2.2.1	Standard	• IEEE 802.11g
3.2.2.2	Radio and Modulation Type	• QPSK , BPSK , 16QAM ,64QAM with OFDM
3.2.2.3	Operating Frequency	• 2400 ~ 2483.5MHz ISM band
3.2.2.4	Channel Numbers	• 11 channels for United States • 13 channels for Europe Countries • 13 channels for Japan
3.2.2.5	Data Rate	• 6,9,12,18,24,36,48,54Mbps
3.2.2.6	Media Access Protocol	• CSMA/CA with ACK
3.2.2.7	Receiver Sensitivity at Antenna Connector	• Typical Sensitivity at each RF chain. Frame(1000-byte PDUs)Error Rate<10% at room Temp 25℃ • -82 dBm at 6Mbps • -81 dBm at 9Mbps • -79 dBm at 12Mbps • -77 dBm at 18Mbps • -74 dBm at 24Mbps • -70 dBm at 36Mbps • -66 dBm at 48Mbps • -65 dBm at 54Mbps

3.2.3 IEEE 802.11a Section

	Feature	Detailed Description
3.2.3.1	Standard	• IEEE 802.11a
3.2.3.2	Radio and Modulation Type	• QPSK , BPSK , 16QAM ,64QAM with OFDM
3.2.3.3	Operating Frequency	• 5.15~5.35GHz and 5.725~5.825GHz for US and Canada • 5.15~5.35GHz and 5.47~5.725GHz for Japan • 5.15~5.35GHz and 5.47~5.725GHz for Europe • 5.725~5.825GHz for China
3.2.3.4	Channel Numbers	• 12 non-overlapping channels for US and Canada • 8 non-overlapping channels for Japan • 19 non-overlapping channels for Europe • 4 non-overlapping channels for China
3.2.3.5	Data Rate	• 6,9,12,18,24,36,48,54Mbps
3.2.3.6	Media Access Protocol	• CSMA/CA with ACK
3.2.3.7	Receiver Sensitivity at Antenna Connector	• Typical Sensitivity at each RF chain. Frame(1000-byte PDUs)Error Rate<10% at room Temp 25℃ • -82 dBm at 6Mbps • -81 dBm at 9Mbps • -79 dBm at 12Mbps • -77 dBm at 18Mbps • -74 dBm at 24Mbps • -70 dBm at 36Mbps • -66 dBm at 48Mbps • -65 dBm at 54Mbps

3.2.4 IEEE 802.11n Section

	Feature	Detailed Description
3.2.4.1	Standard	• IEEE 802.11n
3.2.4.2	Radio and Modulation Type	• BPSK , QPSK , 16QAM ,64QAM with OFDM
3.2.4.3	Operating Frequency	• 2.4GHz band:2400 ~ 2483.5MHz • 5GHz and:5150 ~ 5825MHZ

3.2.4.4 Data Rate

MCS	GI=800ns		GI=400ns	
	20MHz	40MH	20MHz	40MHz
0	6.5	13.5	7.2	15
1	13	27	14.4	30
2	19.5	40.5	21.7	45
3	26	54	28.9	60
4	39	81	43.3	90
5	52	108	57.8	120
6	58.5	121.5	65.0	135
7	65	135	72.2	150
8	13	27	14.444	30
9	26	54	28.889	60
10	39	81	43.333	90
11	52	108	57.778	120
12	78	162	86.667	180
13	104	216	115.556	240
14	117	243	130.000	170
15	130	270	144.444	300

3.2.4.5	Media Access Protocol	• CSMA/CA with ACK

3.2.4.6	Receiver Sensitivity at Antenna Connector	Typical Sensitivity at each RF chain at Which Frame (1000-byte PDUs) Error Rate=10% and at room Temp. 25℃	
		2.4GHz Band/HT20 • -82dBm at MCS0 • -79dBm at MCS1 • -77dBm at MCS2 • -74dBm at MCS3 • -70dBm at MCS4 • -66dBm at MCS5 • -65dBm at MCS6 • -64dBm at MCS7	2.4GHz Band/HT40 • -79dBm at MCS0 • -76dBm at MCS1 • -74dBm at MCS2 • -71dBm at MCS3 • -67dBm at MCS4 • -63dBm at MCS5 • -62dBm at MCS6 • -61dBm at MCS7
		5GHz Band/HT20 • -82dBm at MCS0 • -79dBm at MCS1 • -77dBm at MCS2 • -74dBm at MCS3 • -70dBm at MCS4 • -66dBm at MCS5 • -65dBm at MCS6 • -64dBm at MCS7	5GHz Band/HT40 • -79dBm at MCS0 • -76dBm at MCS1 • -74dBm at MCS2 • -71dBm at MCS3 • -67dBm at MCS4 • -63dBm at MCS5 • -62dBm at MCS6 • -61dBm at MCS7

3.2.5 IEEE 802.11ac Section

	Feature	Detailed Description
3.2.5.1	Standard	• IEEE 802.11ac
3.2.5.2	Radio and Modulation Type	• QPSK , BPSK , 16QAM ,64QAM,256QAM with OFDM
3.2.5.3	Operating Frequency	• 5.15~5.35GHz and 5.725~5.825GHz for US and Canada • 5.15~5.35GHz and 5.47~5.725GHz for Japan • 5.15~5.35GHz and 5.47~5.725GHz for Europe • 5.725~5.825GHz for China
3.2.5.4	Channel Numbers	• 12 non-overlapping channels for US and Canada • 8 non-overlapping channels for Japan • 19 non-overlapping channels for Europe • 4 non-overlapping channels for China
3.2.5.5	Data Rate	• at most 433.3 Mbps
3.2.5.6	Media Access Protocol	• CSMA/CA with ACK
	Transmitter Output Power at Antenna Connector	• Typical RF Output Power(tolerance±2dB) at each RF chain, Data Rate and at roomTemp. 25℃ • +11 dBm at HT20 / HT40
3.2.5.7	Receiver Sensitivity at Antenna Connector	• Typical Sensitivity at each RF chain. Frame(1000-byte PDUs)Error Rate<10% at room Temp 25℃ 5GHz Band / HT20 • -82dBm at MCS0 • -79dBm at MCS1 • -77dBm at MCS2 • -74dBm at MCS3 • -70dBm at MCS4 • -66dBm at MCS5 • -65dBm at MCS6 • -64dBm at MCS7 • -59dBm at MCS8 • -57dBm at MCS9 5GHz Band / HT40 • -79dBm at MCS0 • -76dBm at MCS1 • -74dBm at MCS2 • -71dBm at MCS3 • -67dBm at MCS4 • -63dBm at MCS5 • -62dBm at MCS6 • -61dBm at MCS7 • -56dBm at MCS8 • -54dBm at MCS9 5GHz Band / HT80 • -76dBm at MCS0 • -73dBm at MCS1 • -71dBm at MCS2 • -68dBm at MCS3 • -64dBm at MCS4 • -60dBm at MCS5 • -59dBm at MCS6 • -58dBm at MCS7 • -55dBm at MCS8

4. Electrical and Thermal Characteristics

4.1 Temperature Limit Ratings

Parameter	Minimum	Maximum	Units
Storage Temperature	-40	+80	C
Ambient Operating Temperature	0	60	C
Junction Temperature	0	125	C

4.2 General Section

	Feature	Detailed Description
4.2.1	Antenna Type	• Integrated antenna
4.2.2	Operating Voltage	• 5V±10%
4.2.3	Current Consumption	• < 500mA
4.2.4	Form Factor and Interface	• High Speed USB2.0 Interface

4.3 Software

Driver	Windows XP/ WinCE/ Vista,/ Win7, Linux, MAC
Security	64/128-bits WEP, WPA, WPA2

4.4 Mechanical Requirements

	Feature	Detailed Description
4.4.1	Length	• 40mm
4.4.2	Width	• 20mm
4.4.3	Height	• 1.2/4.2mm(PCB/max)

5. Guide for the User:

This modular transmitter only has data inputs from the Digital Video Recorder assembly thus ensuring that the module will continue to comply with Part 15 requirements and no conditions of excessive data rates or over-modulation can occur.

The modular that does not meet all eight requirements listed in Section 15.212(a) (1), and compliance can be demonstrated only for specific host and applicable operating conditions in which the transmitter will be used.

The modular is granted as limited modular approval that is limited to that specific host or hosts. The transmitter inside the host device during testing. The specific host device is Digital Video Recorder (DVR). The responsible party must demonstrate how it will retain control over the final installation of the device, such that compliance of the product is ensured by limiting the installation to a specific host or hosts

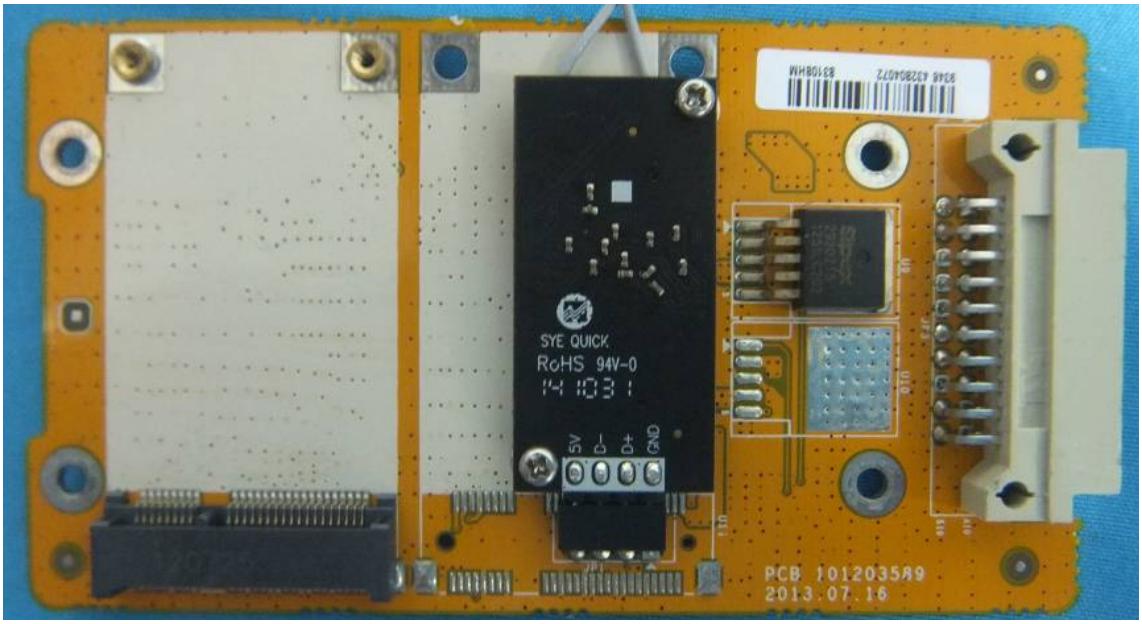

For user-installed limited module radios in a host (laptops, etc), a two-way certification authentication protocol or two-way BIOS lock implementation is required to ensure compliance. This ensures the module verifies that the proper DVR is used and the DVR verifies that the proper module is used.

This device must use a BIOS lock mechanism which ensures that it only operates with the hosts as specified in the Certification filing." This ensures the module verifies that the proper host (DVR) is used, and the host verifies that the proper module is used. Other options to a BIOS lock mechanism may be considered, but must be FCC endorsed prior to an FCC approval.

Per FCC Section 15.212: When the FCC identification number is not visible when the module is installed inside another device, then the outside of the device into which the module is installed must also display a label referring to the enclosed module. This exterior label can use wording such as the following: “Contains Transmitter Module FCC ID: 2ADY6WC18R2211” or “Contains FCC ID: 2ADY6WC18R2211” and the information should be also contained in the devices’ user manual

RF Exposure Considerations: This equipment should be installed and operated with a minimum distance 20cm between the radiator and your body

6. Statements

This device complies with Part 15 of the FCC Rules. Operation is subject to the following two conditions:

(1) This device may not cause harmful interference, and

(2) This device must accept any interference received, including interference that may cause undesired operation.

Please take attention that changes or modification not expressly approved by the party responsible for compliance could void the user's authority to operate the equipment.

Note: This product has been tested and found to comply with the limits for a Class B digital device, pursuant to Part 15 of the FCC Rules. These limits are designed to provide reasonable protection against harmful interference in a residential installation. This product generates, uses, and can radiate radio frequency energy and, if not installed and used in accordance with the instructions, may cause harmful interference to radio communications. However, there is no guarantee that interference will not occur in a particular installation. If this product does cause harmful interference to radio or television reception, which can be determined by turning the equipment off and on, the user is encouraged to try to correct the interference by one or more of the following measures:

—Reorient or relocate the receiving antenna.

—Increase the separation between the equipment and receiver.

—Connect the equipment into an outlet on a circuit different from that to which the receiver is connected.

—Consult the dealer or an experienced radio/TV technician for help.