FCC 47 CFR PART 15 SUBPART C TEST REPORT		
Report Number. .....:	90267-22-72-22-PP005	
Date of issue .....:	May.16.2022	
Tested by (+signature).....:	Duke	Duke Chen
Approved by (+signature) ....:	Jason	Jason gao
Testing Laboratory name .....:	SLG-CPC Testlaboratory Co., Ltd.	
Address .....:	No. 11, Wu Song Road, Dongcheng District, Dongguan, Guangdong Province, China 523117	
Applicant's name.....:	Microcyber Corporation	
Address .....:	FLOOR 1-3, 1#, NO.17-8, WENSU STREET, HUNNAN NEW DISTRICT, SHENYANG, LIAONING, P.R.C.	
Manufacturer's name .....:	Microcyber Corporation	
Address .....:	FLOOR 1-3, 1#, NO.17-8, WENSU STREET, HUNNAN NEW DISTRICT, SHENYANG, LIAONING, P.R.C.	
Factory's name .....:	Microcyber Corporation	
Address .....:	FLOOR 1-3, 1#, NO.17-8, WENSU STREET, HUNNAN NEW DISTRICT, SHENYANG, LIAONING, P.R.C.	
Standard(s) .....:	FCC 47 CFR Part 2, Subpart J FCC 47 CFR Part 15, Subpart C	
Test item description .....:	G1100 WirelessHART Smart Gateway	
Trade Mark .....:	中科博微 MICROCYBER	
Model/Type reference .....:	G1100	
FCC ID.....:	2ADYAG1100	
Date of receipt of test item...:	Apr.20.2022	
Date (s) of performance of test .....:	Apr.21.2022 to May.12.2022	
Summary of Test Results .....:	**Pass**	
The Summary of Test Results based on a technical opinion belongs to the standard(s).		
General disclaimer: This report shall not be reproduced except in full, without the written approval of SLG-CPC Testlaboratory Co., Ltd. The test results in the report only apply to the tested sample.		

Address:No.11,WuSongRoad, DongchengDistrict,Dongguan, GuangdongProvince,China523117
Tel: 86-769-22607797
Fax: 86-769-22607907
http://www.cpcteam.com

TABLE OF CONTENTS

1 EUT TECHNICAL DESCRIPTION 4

2 SUMMARY OF TEST RESULT 5

3 TEST METHODOLOGY 6

3.1 GENERAL DESCRIPTION OF APPLIED STANDARDS 6

3.2 MEASUREMENT EQUIPMENT USED 6

3.3 DESCRIPTION OF TEST MODES 7

4 FACILITIES AND ACCREDITATIONS 8

4.1 FACILITIES 8

4.2 LABORATORY ACCREDITATIONS AND LISTINGS 8

5 TEST SYSTEM UNCERTAINTY 9

6 SETUP OF EQUIPMENT UNDER TEST 10

6.1 RADIO FREQUENCY TEST SETUP 1 10

6.2 RADIO FREQUENCY TEST SETUP 2 10

6.3 CONDUCTED EMISSION TEST SETUP 12

6.4 BLOCK DIAGRAM CONFIGURATION OF TEST SYSTEM 13

6.5 SUPPORT EQUIPMENT 13

7 TEST REQUIREMENTS 14

7.1 DTS (6DB) BANDWIDTH 14

7.2 MAXIMUM PEAK CONDUCTED OUTPUT POWER 17

7.3 MAXIMUM POWER SPECTRAL DENSITY 18

7.4 UNWANTED EMISSIONS IN NON-RESTRICTED FREQUENCY BANDS 21

7.5 RADIATED SPURIOUS EMISSION 27

7.6 CONDUCTED EMISSIONS TEST 35

7.7 ANTENNA APPLICATION 36

Modified Information

Version	Report No.	Revision Data	Summary
Ver.1.0	90267-22-72-22-PP001	/	Original Version
Ver.1.1	90267-22-72-22-PP005	2022.06.08	This report is based on 90267-22-72-22-PP001 Modify the trademark

1 EUT TECHNICAL DESCRIPTION

Characteristics	Description
Device Type:	2.4G ISM Band
Model Number:	G1100
Modulation:	DSSS
Operating Frequency Range(s):	2405-2475MHz
Number of Channels:	15 Channels
Channel Separation:	5MHz
Transmit Power Max:	7.23 dBm
Antenna Type :	Omni-directional
Antenna Gain:	2 dBi
Power supply:	☒: DC 24V

Note: *for more details, please refer to the User's manual of the EUT.*

2 SUMMARY OF TEST RESULT

FCC Part Clause	Test Parameter	Verdict	Remark
15.247(a)(2)	DTS (6dB) Bandwidth	PASS	
15.247(b)(3)	Maximum Peak Conducted Output Power	PASS	
15.247(e)	Maximum Power Spectral Density Level	PASS	
15.247(d)	Unwanted Emission Into Non-Restricted Frequency Bands	PASS	
15.247(d) 15.209	Unwanted Emission Into Restricted Frequency Bands (conducted)	PASS	
15.247(d) 15.209	Radiated Spurious Emission	PASS	
15.207	Conducted Emission Test	N/A	
15.247(b)	Antenna Application	PASS	

NOTE1: N/A (Not Applicable)
NOTE2: According to FCC OET KDB 558074, the report use radiated measurements in the restricted frequency bands. In addition, the radiated test is also performed to ensure the emissions emanating from the device cabinet also comply with the applicable limits.

RELATED SUBMITTAL(S) / GRANT(S):

This submittal(s) (test report) is intended for FCC ID: 2ADYAG1100 filing to comply with Section 15.247 of the FCC Part 15, Subpart C Rules.
The system is compliance with Subpart B is authorized under a DOC procedure

3 TEST METHODOLOGY

3.1 GENERAL DESCRIPTION OF APPLIED STANDARDS

According to its specifications, the EUT must comply with the requirements of the following standards:
FCC 47 CFR Part 2, Subpart J
FCC 47 CFR Part 15, Subpart C
FCC KDB 558074 D01 DTS Meas Guidance v05r02

3.2 MEASUREMENT EQUIPMENT USED

Equipment	Model	Manufacturer	S/N	Cal. Due
RF Connected Test				
Vector Signal Generater	Rohde & Schwarz	SMBV100B(6G)	101166	2022/07/30
Analog Signal Generator	Rohde & Schwarz	SMB100A(40G)	181333	2022/07/30
Signal Analyzer	Rohde & Schwarz	FSV40	101527	2023/05/24
Power Analyzer	Rohde & Schwarz	OSP-B157W8	N/A	2022/09/23
Wideband Radio Communication Tester	R&S	CMW270	101985	2022/07/30
Temperature&Humidity test chamber	ESPEC	VC 4018	/	2023/03/25
Wideband Radio Communication Tester	Rohde & Schwarz	CMW500	166898	2022/09/07
Radiated Emission Test				
EMI Test Receiver	KEYSIGHT	N9010A	MY56070465	2022/12/10
EMI Test Receiver	Rohde & Schwarz	FSV40	101511	2022/05/24
Bilog Antenna	Schwarzbeck	VULB 9163	01335	2023/04/28
Power Amplifier	EMEC	EM330	060676	2022/12/10
Cable	Tuyue	F4309	L-400-NmNm-120 00	2022/12/10
Signal Analyzer	Rohde & Schwarz	FSV40	101511	2022/05/24
Horn Antenna	Schwarzbeck	BBHA9170	/	2022/10/09
Power Amplifier	Rohde & Schwarz	SCU-18F	180118	2023/05/17
Active Loop Antenna	ETS LINDGREN	6512	41623	2023/04/23
Test Software	Farad	EZ-EMC	Ver.CPC-3A1	/
Conducted Emission Test				
LISN	Schwarzbeck	NSLK 8127	8127-892	2023/03/19
LISN	Schwarzbeck	NSLK 8127	8127-437	2022/08/11
EMI Test Receiver	R&S	ESR3	102124	2022/12/10
Pulse Limiter	R&S	ESH3-Z2	357.8810.52	2022/12/10
Test Software	Farad	EZ-EMC	Ver.CPC-3A1	/

3.3 DESCRIPTION OF TEST MODES

The EUT has been tested under its typical operating condition.
The EUT configuration for testing is installed on RF field strength measurement to meet the Commissions requirement and operating in a manner which intends to maximize its emission characteristics in a continuous normal application.

The Transmitter was operated in the normal operating mode. The TX frequency was fixed which was for the purpose of the measurements.

Test of channel included the lowest and middle and highest frequency to perform the test, then record on this report.

Pre-defined engineering program for regulatory testing used to control the EUT for staying in continuous transmitting and receiving mode is programmed.

☒Frequency and Channel list:

Channel	Frequency (MHz)	Channel	Frequency (MHz)	Channel	Frequency (MHz)
1	2405	7	2435	13	2465
2	2410	8	2440	14	2470
3	2415	9	2445	15	2475
4	2420	10	2450		
5	2425	11	2455		
6	2430	12	2460		

☒Test Frequency and Channel:

Lowest Frequency		Middle Frequency		Highest Frequency	
Channel	Frequency (MHz)	Channel	Frequency (MHz)	Channel	Frequency (MHz)
1	2405	8	2440	15	2475

4 FACILITIES AND ACCREDITATIONS

4.1 FACILITIES

All measurement facilities used to collect the measurement data are located at

No. 11, Wu Song Road, Dongcheng District, Dongguan, Guangdong Province, China 523117
The sites are constructed in conformance with the requirements of ANSI C63.4, ANSI C63.10 and CISPR Publication 32.

4.2 LABORATORY ACCREDITATIONS AND LISTINGS

Site Description

EMC Lab.	:	Accredited by ISED, October 04 2021 CAB identifier: CN0126 Company Number: 27767 Accredited by A2LA, October 04 2021 The Certificate Registration Number is 6325.01
Name of Firm	:	SLG-CPC Testlaboratory Co., Ltd.
Site Location	:	No. 11, Wu Song Road, Dongcheng District, Dongguan, Guangdong Province, China 523117

5 TEST SYSTEM UNCERTAINTY

The following measurement uncertainty levels have been estimated for tests performed on the apparatus:

Parameter	Uncertainty
Radio Frequency	±1x10^-5
Maximum Peak Output Power Test	±1.0%
Conducted Emissions Test	±3.08dB
Radiated Emission Test	±4.60dB
Power Density	±0.9%
Occupied Bandwidth Test	±2.3%
Band Edge Test	±1.2%
Antenna Port Emission	±3dB
Temperature	±3.2%
Humidity	±2.5%

Measurement Uncertainty for a level of Confidence of 95%

6 SETUP OF EQUIPMENT UNDER TEST

6.1 RADIO FREQUENCY TEST SETUP 1

The WLAN component's antenna ports(s) of the EUT are connected to the measurement instrument per an appropriate attenuator. The EUT is controlled by PC/software to emit the specified signals for the purpose of measurements.

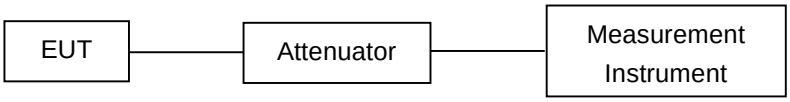

6.2 RADIO FREQUENCY TEST SETUP 2

The test site semi-anechoic chamber has met the requirement of NSA tolerance 4 dB according to the standards: ANSI C63.4. The test distance is 3m.The setup is according to the requirements in Section 13.1.4.1 of ANSI C63.4-2014 and CAN/CSA-CEI/IEC CISPR 32.

Below 30MHz：

The EUT is placed on a turntable 0.8 meters above the ground in the chamber, 3 meter away from the antenna (loop antenna). The Antenna should be positioned with its plane vertical at the specified distance from the EUT and rotated about its vertical axis for maximum response at each azimuth about the EUT. The center of the loop shall be 1 m above the ground. For certain applications, the loop antenna plane may also need to be positioned horizontally at the specified distance from the EUT.

Above 30MHz：

The EUT is placed on a turntable 0.8 meters above the ground in the chamber, 3 meter away from the antenna. The maximal emission value is acquired by adjusting the antenna height, polarisation and turntable azimuth. Normally, the height range of antenna is 1 m to 4 m, the azimuth range of turntable is 0° to 360°, and the receive antenna has two polarizations Vertical (V) and Horizontal (H).

Above 1GHz:

(Note: the FCC's permission to use 1.5m as an alternative per TCBC Conf call of Dec. 2, 2014.)

The EUT is placed on a turntable 1.5 meters above the ground in the chamber, 3 meter away from the antenna. The maximal emission value is acquired by adjusting the antenna height, polarisation and turntable azimuth. Normally, the height range of antenna is 1 m to 4 m, the azimuth range of turntable is 0° to 360°, and the receive antenna has two polarizations Vertical (V) and Horizontal (H).

(a) Radiated Emission Test Set-Up, Frequency Below 30MHz

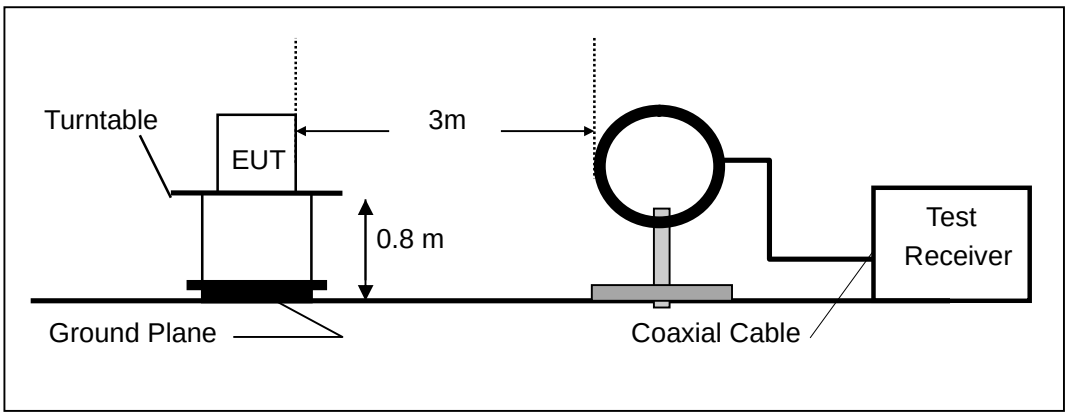

(b) Radiated Emission Test Set-Up, Frequency Below 1000MHz

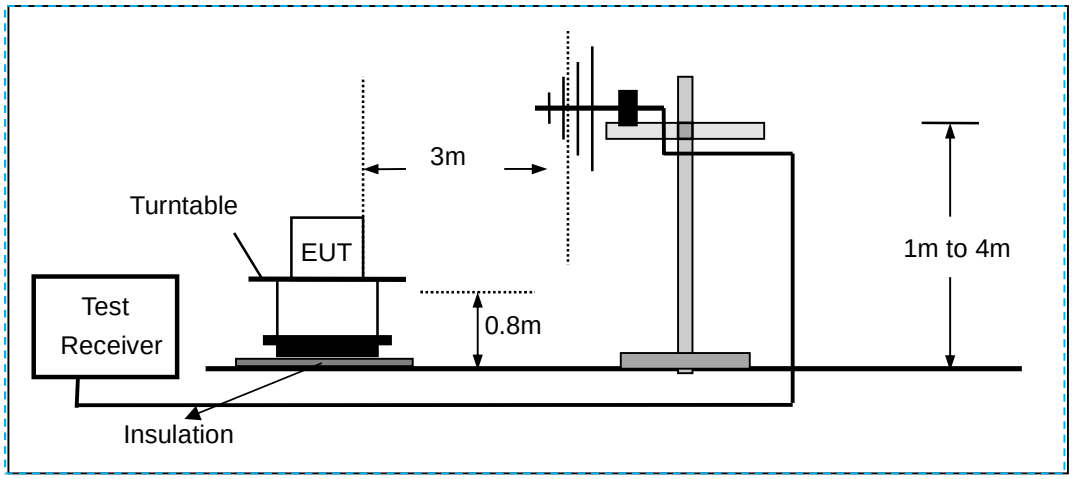

(c) Radiated Emission Test Set-Up, Frequency above 1000MHz

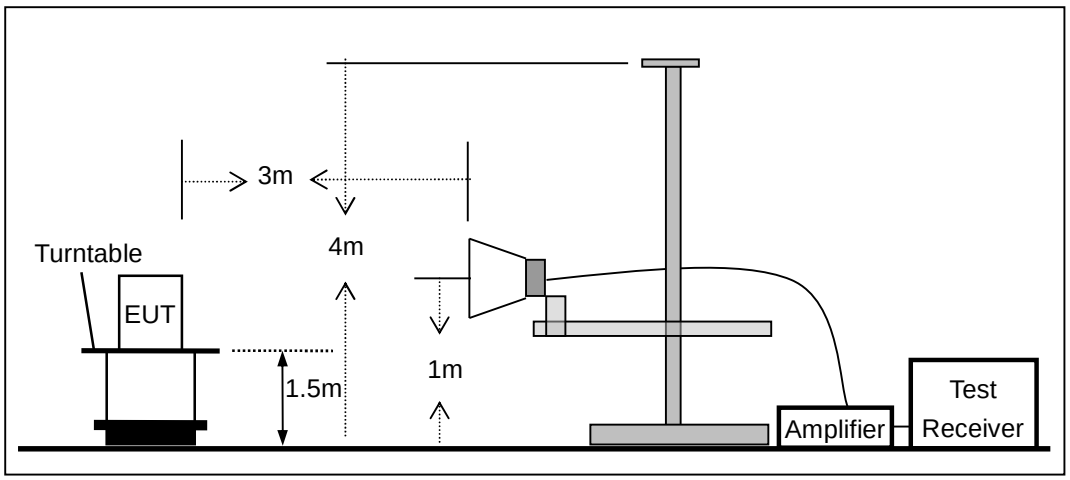

6.3 CONDUCTED EMISSION TEST SETUP

The mains cable of the EUT (maybe per AC/DC Adapter) must be connected to LISN. The LISN shall be placed 0.8 m from the boundary of EUT and bonded to a ground reference plane for LISN mounted on top of the ground reference plane. This distance is between the closest points of the LISN and the EUT. All other units of the EUT and associated equipment shall be at least 0.8m from the LISN.

Ground connections, where required for safety purposes, shall be connected to the reference ground point of the LISN and, where not otherwise provided or specified by the manufacturer, shall be of same length as the mains cable and run parallel to the mains connection at a separation distance of not more than 0.1 m.

According to the requirements in Section 13.1.4.1 of ANSI C63.4-2014 Conducted emissions from the EUT measured in the frequency range between 0.15 MHz and 30 MHz using CISPR Quasi-Peak and average detector mode.

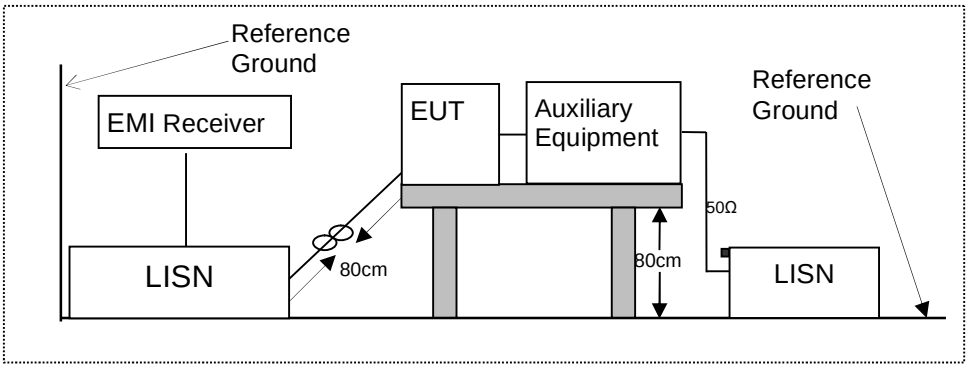

6.4 BLOCK DIAGRAM CONFIGURATION OF TEST SYSTEM

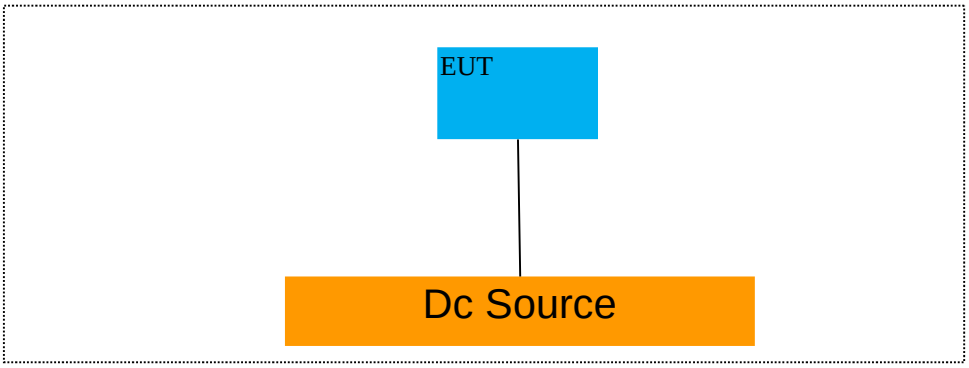

6.5 SUPPORT EQUIPMENT

EUT Cable List and Details			
Cable Description	Length (m)	Shielded/Unshielded	With / Without Ferrite

Auxiliary Cable List and Details			
Cable Description	Length (m)	Shielded/Unshielded	With / Without Ferrite

Auxiliary Equipment List and Details			
Description	Manufacturer	Model	Serial Number
Notebook	Lenovo	MPNXB1505007	MP1XHYV7

Notes:

1. *All the equipment/cables were placed in the worst-case configuration to maximize the emission during the test.*
2. *Grounding was established in accordance with the manufacturer's requirements and conditions for the intended use.*

7 TEST REQUIREMENTS

7.1 DTS (6DB) BANDWIDTH

Applicable Standard

According to FCC Part 15.247(a)(2) and KDB 558074 DTS 01 Meas. Guidance v05r02

Conformance Limit

The minimum -6 dB bandwidth shall be at least 500 kHz.

Test Configuration

Test according to clause 6.1 radio frequency test setup 1

Test Procedure

The EUT was operating in DSSS mode and controlled its channel. Printed out the test result from the spectrum by hard copy function.
The RF output of EUT was connected to the spectrum analyzer by RF cable and attenuator. The path loss was compensated to the results for each measurement.
Set to the maximum power setting and enable the EUT transmit continuously
Set RBW = 100 kHz.
Set the video bandwidth (VBW) =300 kHz.
Set Span=2 times OBW
Set Detector = Peak.
Set Trace mode = max hold.
Set Sweep = auto couple.
Allow the trace to stabilize.
Measure the maximum width of the emission that is constrained by the frequencies associated with the two outermost amplitude points (upper and lower frequencies) that are attenuated by 6 dB relative to the maximum level measured in the fundamental emission.
Measure and record the results in the test report.

Test Results

Temperature:	26° C
Relative Humidity:	54%
ATM Pressure:	1011 mbar

Operation Mode	Channel Number	Channel Frequency (MHz)	Measurement Bandwidth (MHz)	Limit (kHz)	Verdict
DSSS	1	2405	1.464	>500	PASS
	8	2440	1.401	>500	PASS
	15	2475	1.551	>500	PASS

Test Model	DTS (6dB) Bandwidth DSSS Channel 1: 2405MHz

Test Model	DTS (6dB) Bandwidth DSSS Channel 8: 2440MHz

Test Model	DTS (6dB) Bandwidth DSSS Channel 15: 2475MHz

7.2 MAXIMUM PEAK CONDUCTED OUTPUT POWER

7.2.1 Applicable Standard

According to FCC Part 15.247(b)(3) and KDB 558074 DTS 01 Meas. Guidance v05r02

Conformance Limit

The maximum peak conducted output power of the intentional radiator for systems using digital modulation in the 2400 - 2483.5 MHz bands shall not exceed: 1 Watt (30dBm).

7.2.2 Test Configuration

Test according to clause 6.1 radio frequency test setup 1

7.2.3 Test Procedure

■ According to FCC Part15.247(b)(3)
The maximum peak conducted output power may be measured using a broadband peak RF power meter. The power meter shall have a video bandwidth that is greater than or equal to the DTS bandwidth and shall utilize a fast-responding diode detector.
The testing follows FCC public Notice DA 00-705 Measurement Guidelines.
The RF output of EUT was connected to the power meter by RF cable and attnuator. The path loss was compensated to the results for each measurement.
Set to the maximum output power setting and enable the EUT transmit continuously.
Measure the conducted output power with cable loss and record the results in the test report.
Measure and record the results in the report.
■ According to FCC Part 15.247(b)(4):
Conducted output power limit specified in paragraph (b) of this section is based on the use of antennas with directional gains that do not exceed 6 dBi. If transmitting antennas of directional gain greater than 6 dBi are used, the conducted output power from the intentional radiator shall be reduced below the stated values in paragraphs (b)(3) of this section, as appropriate, by the amount in dB that the directional gain of the antenna exceeds 6 dBi.
Note: If antenna Gain exceeds 6 dBi, then Output power Limit=30-(Gain - 6)

7.2.4 Test Results

Temperature:	26° C
Relative Humidity:	54%
ATM Pressure:	1011 mbar

Operation Mode	Channel Number	Channel Frequency (MHz)	Measurement Level (dBm)	Limit (dBm)	Verdict
DSSS	1	2405	7.23	30	PASS
	8	2440	6.63	30	PASS
	15	2475	5.63	30	PASS

7.3 MAXIMUM POWER SPECTRAL DENSITY

7.3.1 Applicable Standard

According to FCC Part 15.247(e) and KDB 558074 DTS 01 Meas. Guidance v05r02

7.3.2 Conformance Limit

The transmitter power spectral density conducted from the transmitter to the antenna shall not be greater than 8 dBm in any 3 kHz band during any time interval of continuous transmission.

7.3.3 Test Configuration

Test according to clause 6.1 radio frequency test setup 1

7.3.4 Test Procedure

This procedure shall be used if maximum peak conducted output power was used to demonstrate compliance
The transmitter output (antenna port) was connected to the spectrum analyzer
Set analyzer center frequency to DTS channel center frequency.
Set the span to 1.5 times the DTS bandwidth.
Set the RBW to: 3 kHz
Set the VBW to: 10 kHz.
Set Detector = peak.
Set Sweep time = auto couple.
Set Trace mode = max hold.
Allow trace to fully stabilize.
Use the peak marker function to determine the maximum amplitude level within the RBW.
Note: If antenna Gain exceeds 6 dBi, then PSD Limit=8-(Gain - 6)

7.3.5 Test Results

Temperature:	26° C
Relative Humidity:	54%
ATM Pressure:	1011 mbar

Operation Mode	Channel Number	Channel Frequency (MHz)	Measurement Level (dBm/3kHz)	Limit (dBm/3kHz)	Verdict
DSSS	1	2405	-13.29	<8	PASS
	8	2440	-14.83	<8	PASS
	15	2475	-14.33	<8	PASS

Test Model	Power Spectral Density DSSS Channel 1: 2405MHz

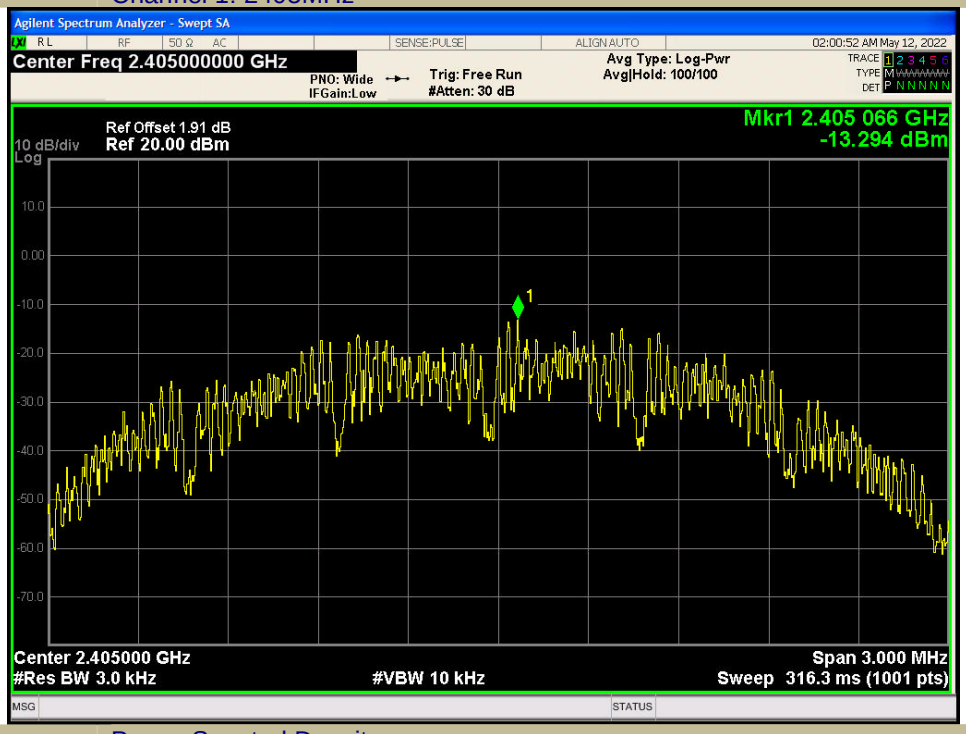

Test Model	Power Spectral Density DSSS Channel 8: 2440MHz

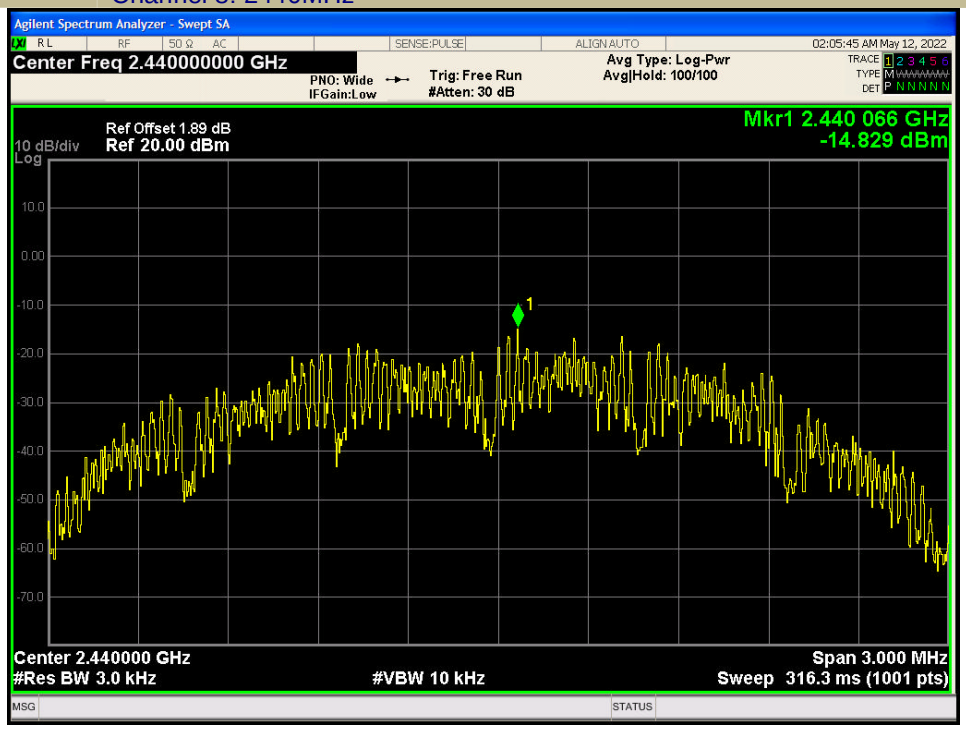

Test Model	Power Spectral Density DSSS Channel 15: 2475MHz

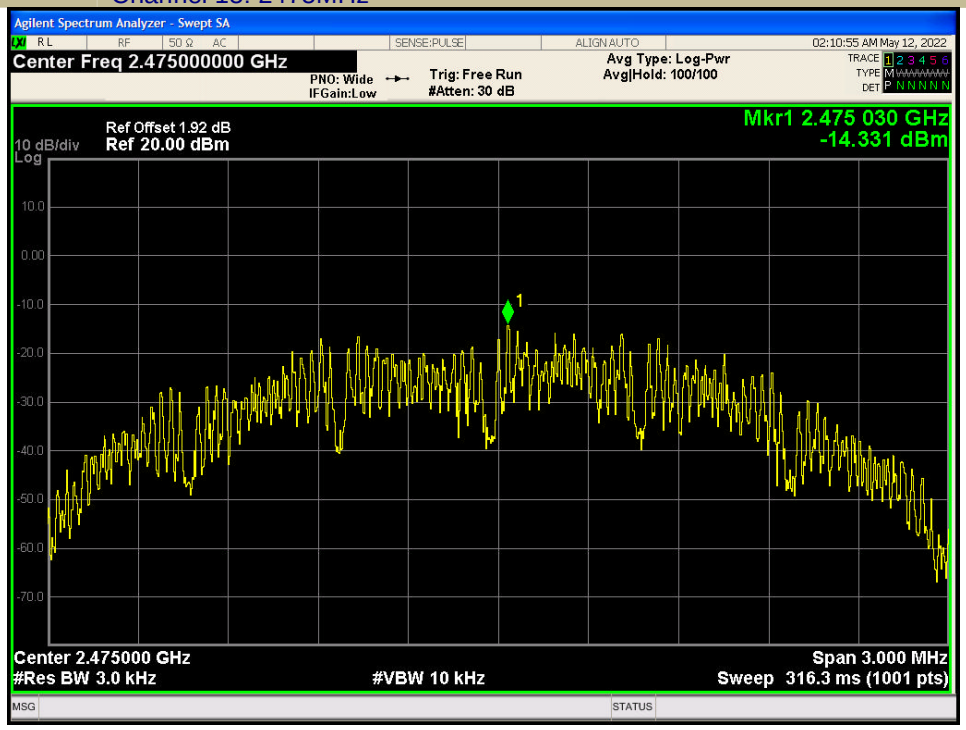

7.4 UNWANTED EMISSIONS IN NON-RESTRICTED FREQUENCY BANDS

7.4.1 Applicable Standard

According to FCC Part 15.247(d) and KDB 558074 DTS 01 Meas. Guidance v05r02

7.4.2 Conformance Limit

According to FCC Part 15.247(d):
In any 100 kHz bandwidth outside the frequency band in which the spread spectrum or digitally modulated intentional radiator is operating, the radio frequency power that is produced by the intentional radiator shall be at least 20 dB below that in the 100 kHz bandwidth within the band that contains the highest level of the desired power, based on either an RF conducted or a radiated measurement, provided the transmitter demonstrates compliance with the peak conducted power limits. If the transmitter complies with the conducted power limits based on the use of RMS averaging over a time interval, as permitted under paragraph (b)(3) of this section, the attenuation required under this paragraph shall be 30 dB instead of 20 dB.

7.4.3 Test Configuration

Test according to clause 6.1 radio frequency test setup 1

7.4.4 Test Procedure

The transmitter output (antenna port) was connected to the spectrum analyzer

- **Reference level measurement**

Establish a reference level by using the following procedure:
Set instrument center frequency to DTS channel center frequency.
Set the span to ≥ 1.5 times the DTS bandwidth.
Set the RBW = 100 kHz.
Set the VBW ≥ 3 x RBW.
Set Detector = peak.
Set Sweep time = auto couple.
Set Trace mode = max hold.
Allow trace to fully stabilize.
Use the peak marker function to determine the maximum PSD level.
Note that the channel found to contain the maximum PSD level can be used to establish the reference level.

- **Emission level measurement**

Set the center frequency and span to encompass frequency range to be measured.
Set the RBW = 100 kHz.
Set the VBW =300 kHz.
Set Detector = peak
Sweep time = auto couple.
Trace mode = max hold.
Allow trace to fully stabilize.
Use the peak marker function to determine the maximum amplitude level.
Ensure that the amplitude of all unwanted emissions outside of the authorized frequency band (excluding restricted frequency bands) are attenuated by at least the minimum requirements . Report the three highest emissions relative to the limit.

7.4.5 Test Results

Temperature:	26° C
Relative Humidity:	54%
ATM Pressure:	1011 mbar

Test Model	PSD(Power Spectral Density) RBW=100kHz DSSS ☒Channel 1: 2405MHz

Test Model	Unwanted Emissions in non-restricted frequency bands DSSS ☒Channel 1: 2405MHz

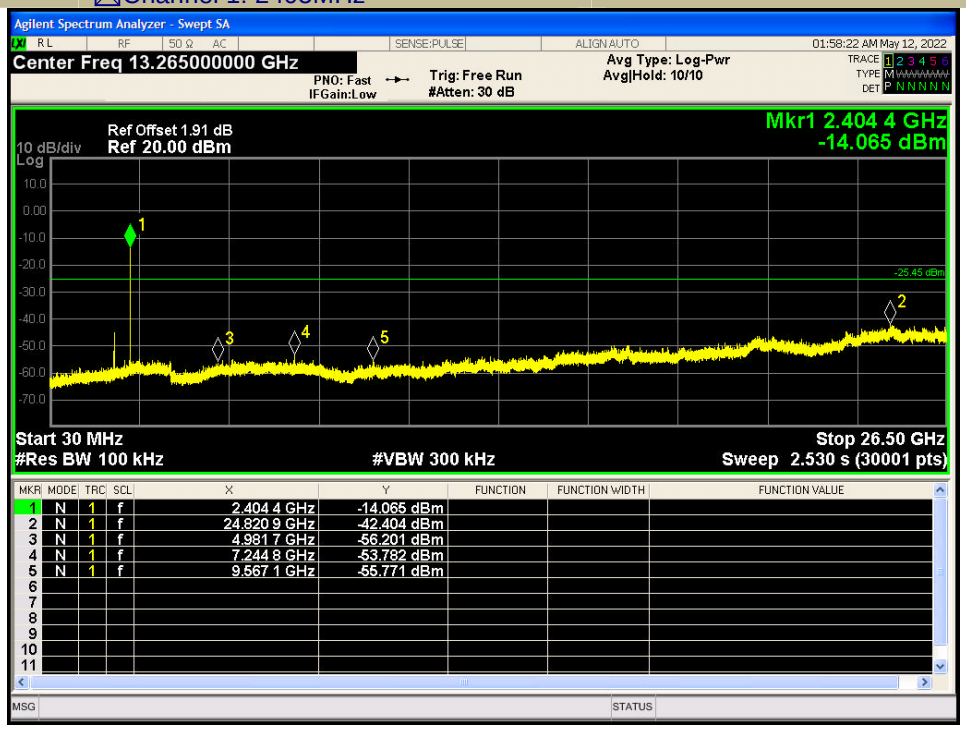

Test Model	Band edge DSSS ☒Channel 1: 2405MHz

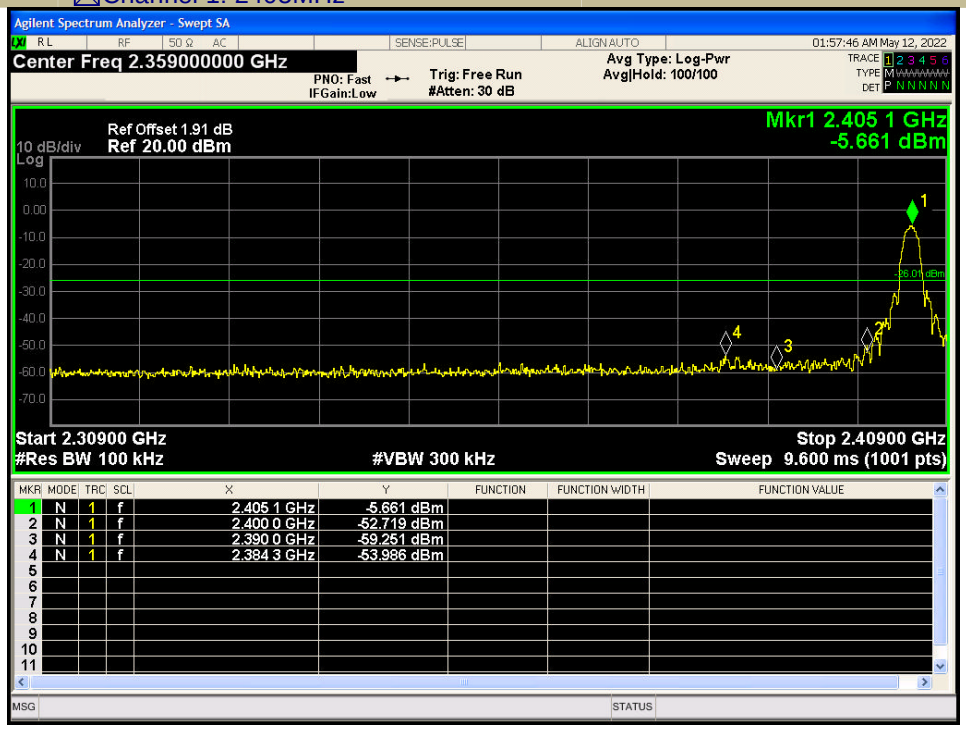

Test Model	PSD(Power Spectral Density) RBW=100kHz DSSS ☒Channel 8: 2440MHz

Test Model	Unwanted Emissions In Non-Restricted Frequency Bands DSSS ☒Channel 8: 2440MHz

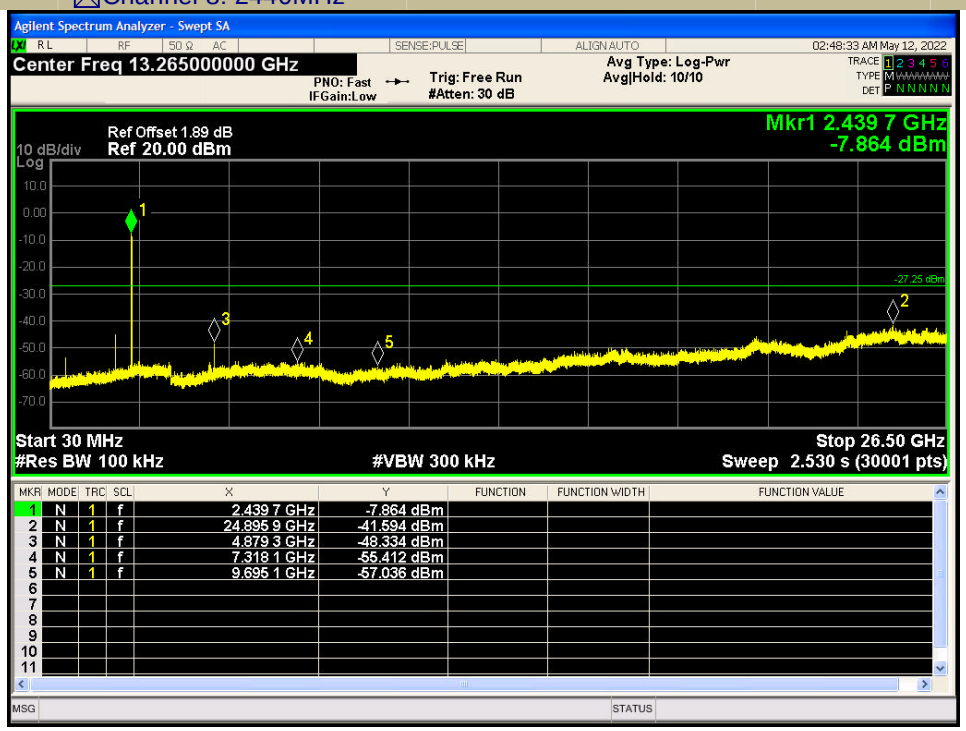

Test Model	PSD(Power Spectral Density) RBW=100kHz DSSS ☒Channel 15: 2475MHz

Test Model	Unwanted Emissions In Non-Restricted Frequency Bands DSSS ☒Channel 15: 2475MHz

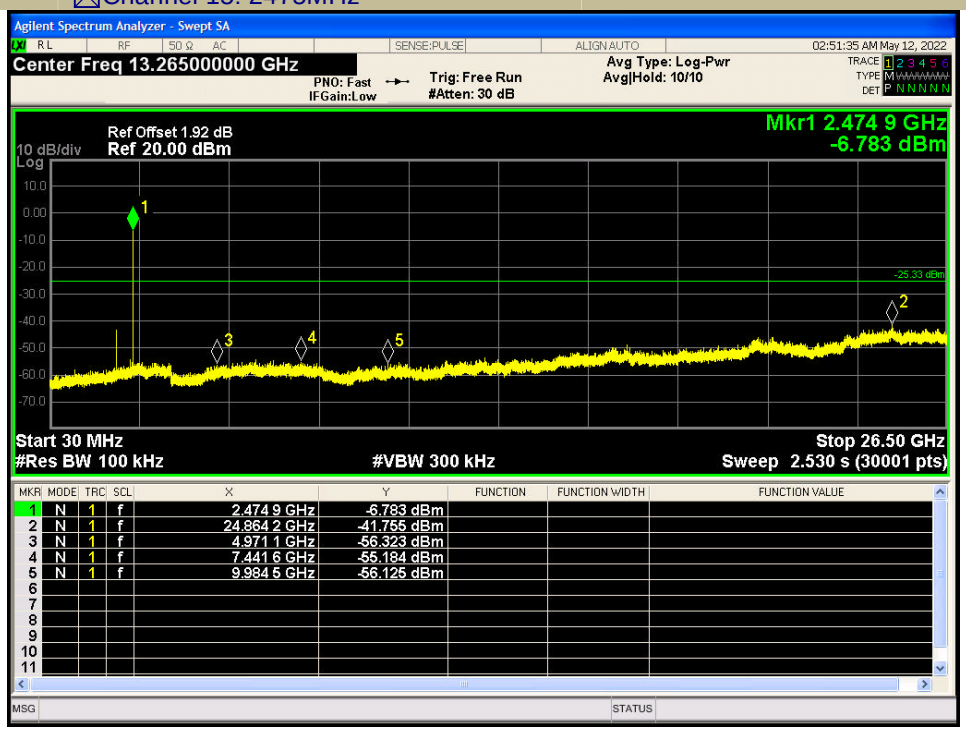

Test Model	Band edge DSSS ☒Channel 15: 2475MHz

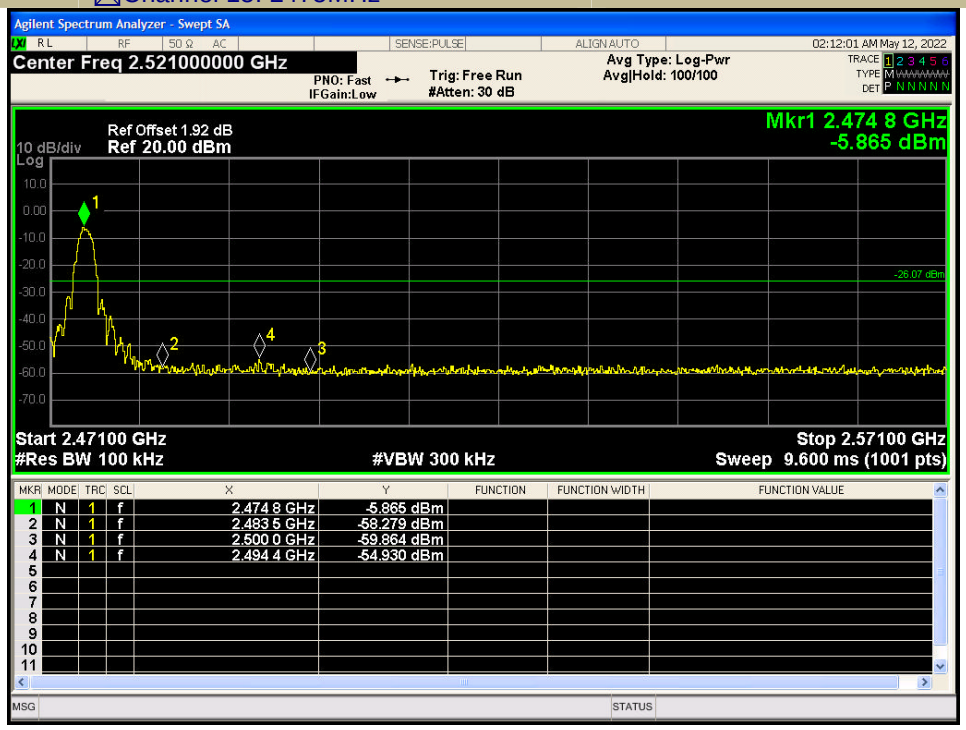

7.5 RADIATED SPURIOUS EMISSION

7.5.1 Applicable Standard

According to FCC Part 15.247(d) and 15.209 and KDB 558074 DTS 01 Meas. Guidance v05r02

7.5.2 Conformance Limit

According to FCC Part 15.247(d): radiated emissions which fall in the restricted bands, as defined in §15.205(a), must also comply with the radiated emission limits specified in §15.209(a) (see §15.205(c)).
According to FCC Part15.205, Restricted bands

MHz	MHz	MHz	GHz
0.090-0.110	16.42-16.423	399.9-410	4.5-5.15
10.495-0.505	16.69475-16.69525	608-614	5.35-5.46
2.1735-2.1905	16.80425-16.80475	960-1240	7.25-7.75
4.125-4.128	25.5-25.67	1300-1427	8.025-8.5
4.17725-4.17775	37.5-38.25	1435-1626.5	9.0-9.2
4.20725-4.20775	73-74.6	1645.5-1646.5	9.3-9.5
6.215-6.218	74.8-75.2	1660-1710	10.6-12.7
6.26775-6.26825	123-138	2200-2300	14.47-14.5
8.291-8.294	149.9-150.05	2310-2390	15.35-16.2
8.362-8.366	156.52475-156.52525	2483.5-2500	17.7-21.4
8.37625-8.38675	156.7-156.9	2690-2900	22.01-23.12
8.41425-8.41475	162.0125-167.17	3260-3267	23.6-24.0
12.29-12.293	167.72-173.2	3332-3339	31.2-31.8
12.51975-12.52025	240-285	3345.8-3358	36.43-36.5
12.57675-12.57725	322-335.4	3600-4400	(2)
13.36-13.41			

According to FCC Part15.205, the level of any transmitter spurious emission in Restricted bands shall not exceed the level of the emission specified in the following table

Restricted Frequency(MHz)	Field Strength (μV/m)	Field Strength (dBμV/m)	Measurement Distance
0.009-0.490	2400/F(KHz)	20 log (uV/m)	300
0.490-1.705	2400/F(KHz)	20 log (uV/m)	30
1.705-30	30	29.5	30
30-88	100	40	3
88-216	150	43.5	3
216-960	200	46	3
Above 960	500	54	3

7.5.3 Test Configuration

Test according to clause 6.2 radio frequency test setup 2

7.5.4 Test Procedure

This test is required for any spurious emission that falls in a Restricted Band, as defined in Section 15.205. It must be performed with the highest gain of each type of antenna proposed for use with the EUT. Use the following spectrum analyzer settings:
For Above 1GHz:
The EUT was placed on a turn table which is 1.5m above ground plane.
Maximum procedure was performed on the highest emissions to ensure EUT compliance.
Span = wide enough to fully capture the emission being measured
RBW = 1 MHz
VBW ≥ RBW

Sweep = auto
Detector function = peak
Trace = max hold
For Below 1GHz:
The EUT was placed on a turn table which is 0.8m above ground plane.
Maximum procedure was performed on the highest emissions to ensure EUT compliance.
Span = wide enough to fully capture the emission being measured
RBW = 100 kHz for
VBW ≥ RBW
Sweep = auto
Detector function = peak
Trace = max hold
For Below 30MHz:
The EUT was placed on a turn table which is 0.8m above ground plane.
Maximum procedure was performed on the highest emissions to ensure EUT compliance.
Span = wide enough to fully capture the emission being measured
RBW = 9kHz
VBW ≥ RBW
Sweep = auto
Detector function = peak
Trace = max hold
For Below 150KHz:
The EUT was placed on a turn table which is 0.8m above ground plane.
Maximum procedure was performed on the highest emissions to ensure EUT compliance.
Span = wide enough to fully capture the emission being measured
RBW = 200Hz
VBW ≥ RBW
Sweep = auto
Detector function = peak
Trace = max hold
Follow the guidelines in ANSI C63.10-2013 with respect to maximizing the emission by rotating the EUT, measuring the emission while the EUT is situated in three orthogonal planes (if appropriate), adjusting the measurement antenna height and polarization, etc. A pre-amp and a high pass filter are required for this test, in order to provide the measuring system with sufficient sensitivity. Allow the trace to stabilize. The peak reading of the emission, after being corrected by the antenna factor, cable loss, pre-amp gain, etc., is the peak field strength, which must comply with the limit specified in Section 15.35(b). Submit this data.
Now set the VBW to 10 Hz, while maintaining all of the other instrument settings. This peak level, once corrected, must comply with the limit specified in Section 15.209. If the dwell time per channel of the hopping signal is less than 100 ms, then the reading obtained with the 10 Hz VBW may be further adjusted by a “duty cycle correction factor”, derived from 20log(dwell time/100 ms), in an effort to demonstrate compliance with the 15.209 limit. Submit this data.
Repeat above procedures until all frequency measured was complete.

7.5.5 Test Results

Temperature:	26° C
Relative Humidity:	54%
ATM Pressure:	1011 mbar

■ Spurious Emission below 30MHz (9KHz to 30MHz)

Test mode:	TX Mode						
Freq. (MHz)	Ant.Pol. H/V	Emission Level(dBuV/m)		Limit 3m(dBuV/m)		Over(dB)	
		PK	AV	PK	AV	PK	AV
--	--	--	--	--	--	--	--

Note: the amplitude of spurious emission that is attenuated by more than 20dB below the permissible limit has no need to be reported.
Distance extrapolation factor =40log(Specific distance/ test distance)(dB);
Limit line=Specific limits(dBuV) + distance extrapolation factor

■ Spurious Emission Above 1GHz (1GHz to 25GHz)

Test mode:	DSSS	Frequency:	Channel 1: 2405MHz

Freq. (MHz)	Ant.Pol. H/V	Emission Level(dBuV/m)		Limit 3m(dBuV/m)		Over(dB)	
		PK	AV	PK	AV	PK	AV
4810.00	V	55.25	42.6	74	54	-18.75	-11.40
7215.00	V	51.96	39.77	74	54	-22.04	-14.23
9620.00	V	49.45	36.54	74	54	-24.55	-17.46
4810.00	H	58.55	43.8	74	54	-15.45	-10.20
7215.00	H	51.73	38.21	74	54	-22.27	-15.79
9620.00	H	47.99	35.47	74	54	-26.01	-18.53

Test mode:	DSSS	Frequency:	Channel 8: 2440MHz

Freq. (MHz)	Ant.Pol. H/V	Emission Level(dBuV/m)		Limit 3m(dBuV/m)		Over(dB)	
		PK	AV	PK	AV	PK	AV
4880.00	V	55.33	42.41	74	54	-18.67	-11.59
7320.00	V	52.11	40.31	74	54	-21.89	-13.69
9760.00	V	47.95	35.97	74	54	-26.05	-18.03
4880.00	H	57.30	43.43	74	54	-16.70	-10.57
7320.00	H	53.79	38.31	74	54	-20.21	-15.69
9760.00	H	50.27	36.04	74	54	-23.73	-17.96

Test mode:	DSSS	Frequency:	Channel 15: 2475MHz

Freq. (MHz)	Ant.Pol. H/V	Emission Level(dBuV/m)		Limit 3m(dBuV/m)		Over(dB)	
		PK	AV	PK	AV	PK	AV
4950.00	V	55.87	43.42	74	54	-18.13	-10.58
7425.00	V	50.01	38.07	74	54	-23.99	-15.93
9900.00	V	48.86	35.86	74	54	-25.14	-18.14
4950.00	H	56.24	43.61	74	54	-17.76	-10.39
7425.00	H	50.93	38.57	74	54	-23.07	-15.43
9900.00	H	47.65	37.27	74	54	-26.35	-16.73

Note: (1) All Readings are Peak Value (VBW=3MHz) and Peak Value (VBW=10Hz).
(2) Emission Level= Reading Level+Probe Factor +Cable Loss.
(3) Data of measurement within this frequency range shown " -- " in the table above means

the reading of emissions are attenuated more than 20dB below the permissible limits or the field strength is too small to be measured.

- Spurious Emission in Restricted Band 2310-2390MHz and 2483.5-2500MHz

Test mode:	DSSS	Frequency:	Channel 1: 2405MHz

Frequency (MHz)	Polarity	PK(dBuV/m) (VBW=3MHz)	Limit 3m (dBuV/m)	PK(dBuV/m) (VBW=3MHz)	Limit 3m (dBuV/m)
2389.36	H	56.23	74.00	45.87	54.00
2389.52	V	58.02	74.00	47.53	54.00

Test mode:	DSSS	Frequency:	Channel 15: 2475MHz

Frequency (MHz)	Polarity	PK(dBuV/m) (VBW=3MHz)	Limit 3m (dBuV/m)	PK(dBuV/m) (VBW=3MHz)	Limit 3m (dBuV/m)
2483.69	H	55.86	74.00	44.76	54.00
2485.18	V	55.39	74.00	45.21	54.00

Note: (1) All Readings are Peak Value (VBW=3MHz) and Peak Value (VBW=10Hz).
(2) Emission Level= Reading Level+Probe Factor +Cable Loss.
(3) Data of measurement within this frequency range shown " -- " in the table above means the reading of emissions are attenuated more than 20dB below the permissible limits or the field strength is too small to be measured.

All the modulation modes were tested, the data of the worst mode are described in the following table

Test Model	Spurious Emission in Restricted Band 2310-2390MHz DSSS ☒Channel 1: 2405MHz ☐Channel 15: 2475MHz Polarity: H

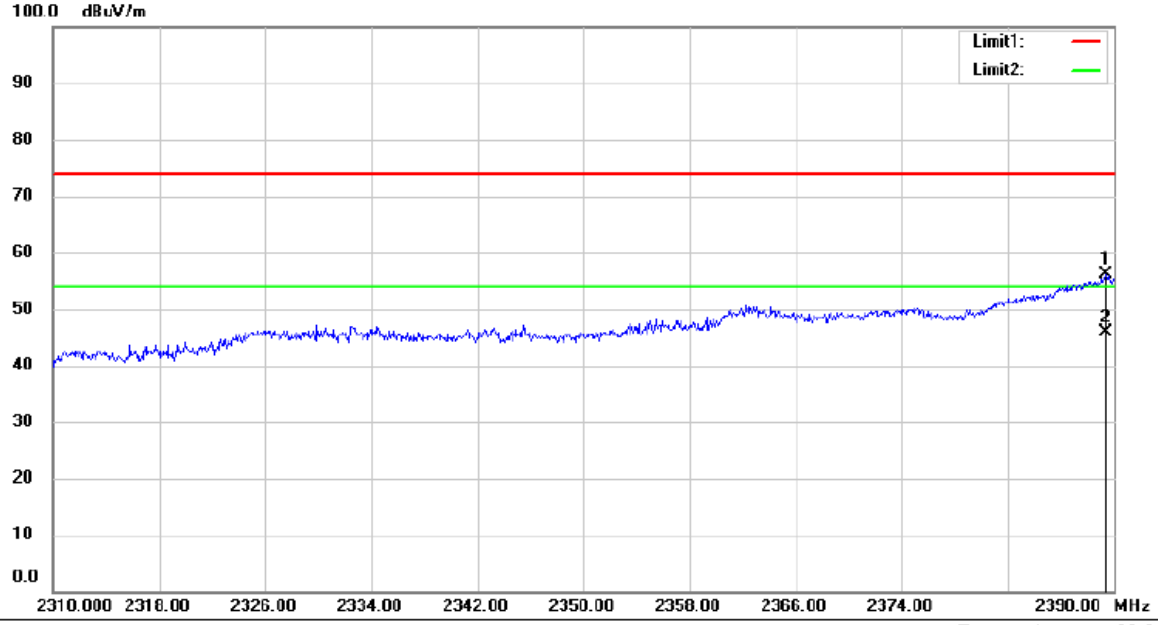

Site 3m Chamber 3# Polarization: ***Horizontal*** Temperature: 23 C
Limit: (RE)FCC PART 15 CLASS B Power: AC 120V/60Hz Humidity: 51 %

Test Model	Spurious Emission in Restricted Band 2310-2390MHz DSSS ☒Channel 1: 2405MHz ☐Channel 15: 2475MHz Polarity: V

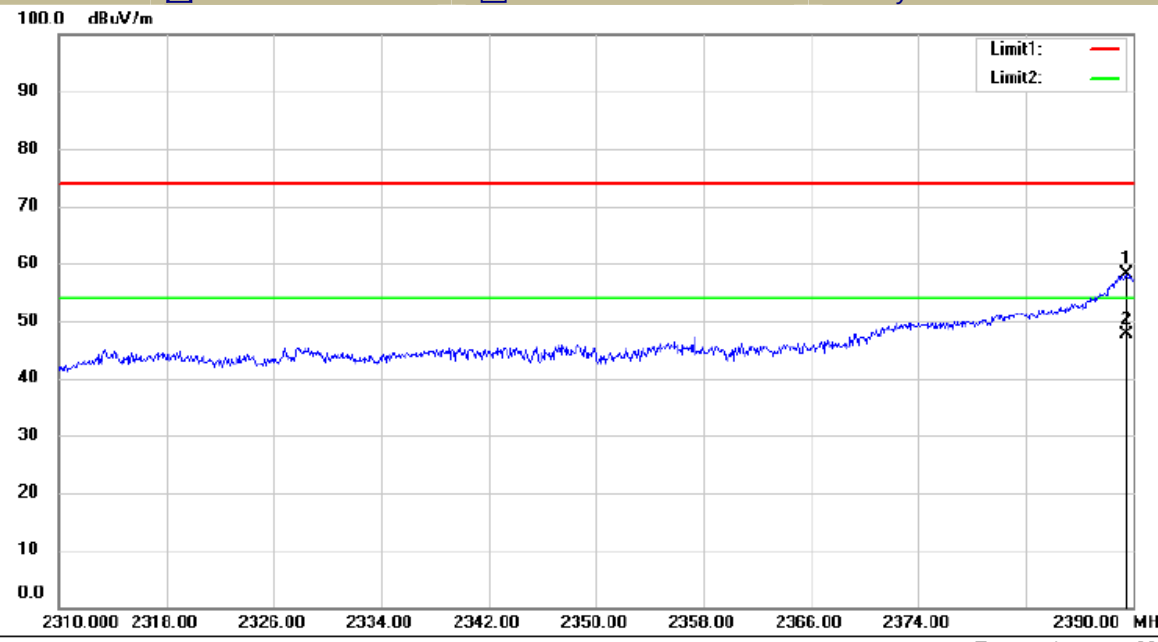

Site 3m Chamber 3# Polarization: ***Vertical*** Temperature: 23 C
Limit: (RE)FCC PART 15 CLASS B Power: AC 120V/60Hz Humidity: 51 %

Test Model	Spurious Emission in Restricted Band 2483.5-2500MHz DSSS ☐Channel 1: 2405MHz ☒Channel 15: 2475MHz Polarity: H

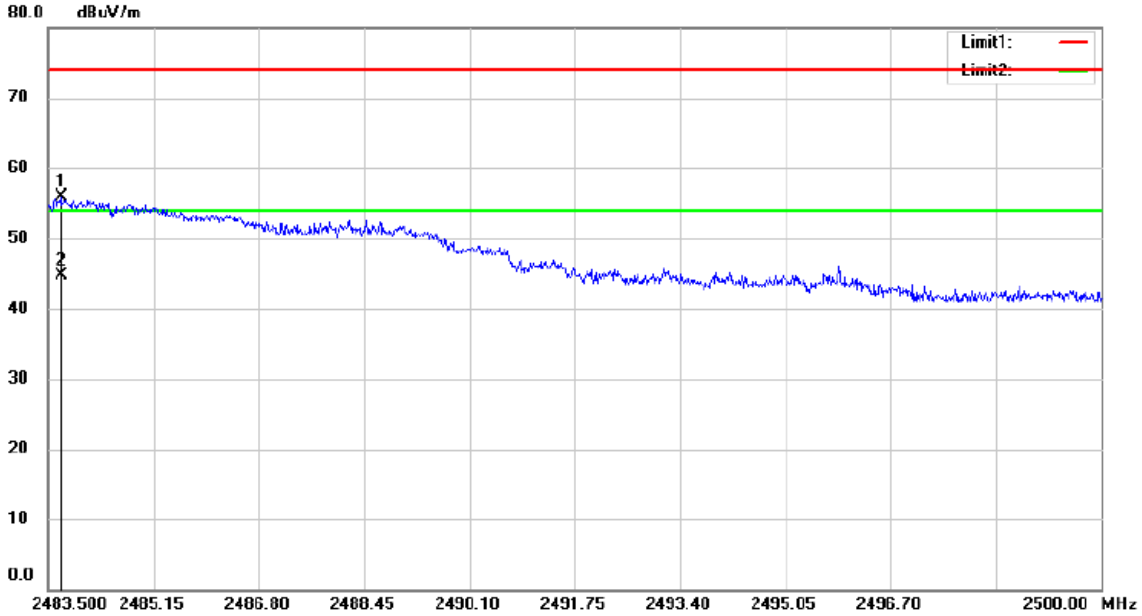

Site 3m Chamber 3# Polarization: ***Horizontal*** Temperature: 23 C
Limit: (RE)FCC PART 15 CLASS B Power: AC 120V/60Hz Humidity: 51 %

Test Model	Spurious Emission in Restricted Band 2483.5-2500MHz DSSS ☐Channel 1: 2405MHz ☒Channel 15: 2475MHz Polarity: V

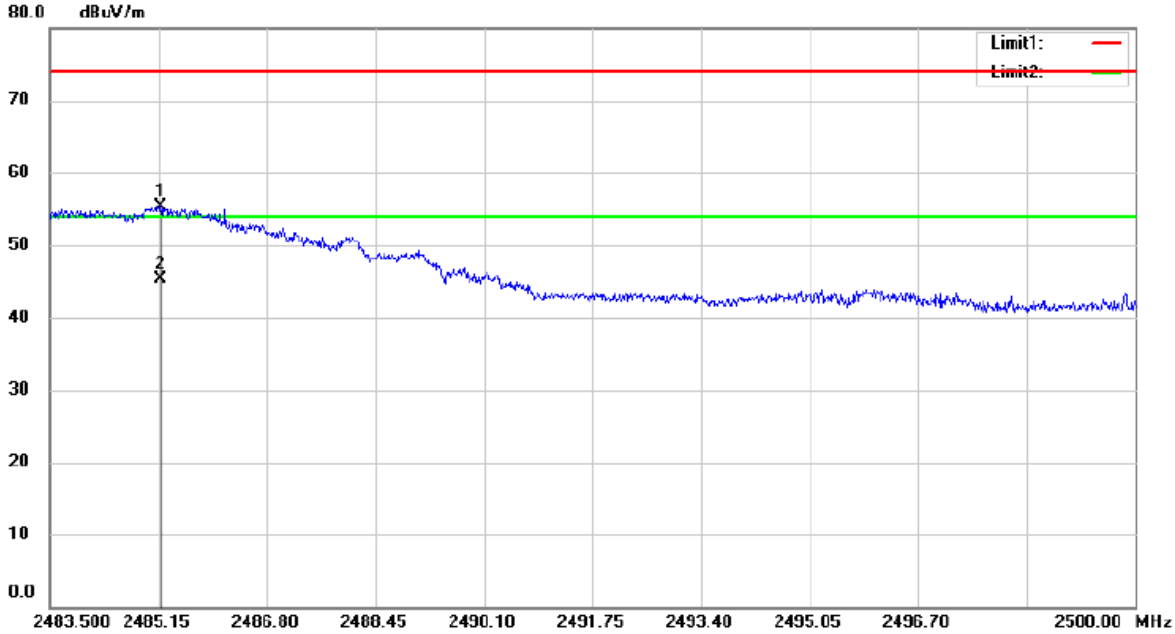

Site 3m Chamber 3# Polarization: ***Vertical*** Temperature: 23 C
Limit: (RE)FCC PART 15 CLASS B Power: AC 120V/60Hz Humidity: 51 %

■ Spurious Emission below 1GHz (30MHz to 1GHz)
High, medium and low levels have been tested, and only the worst channels have been recorded.

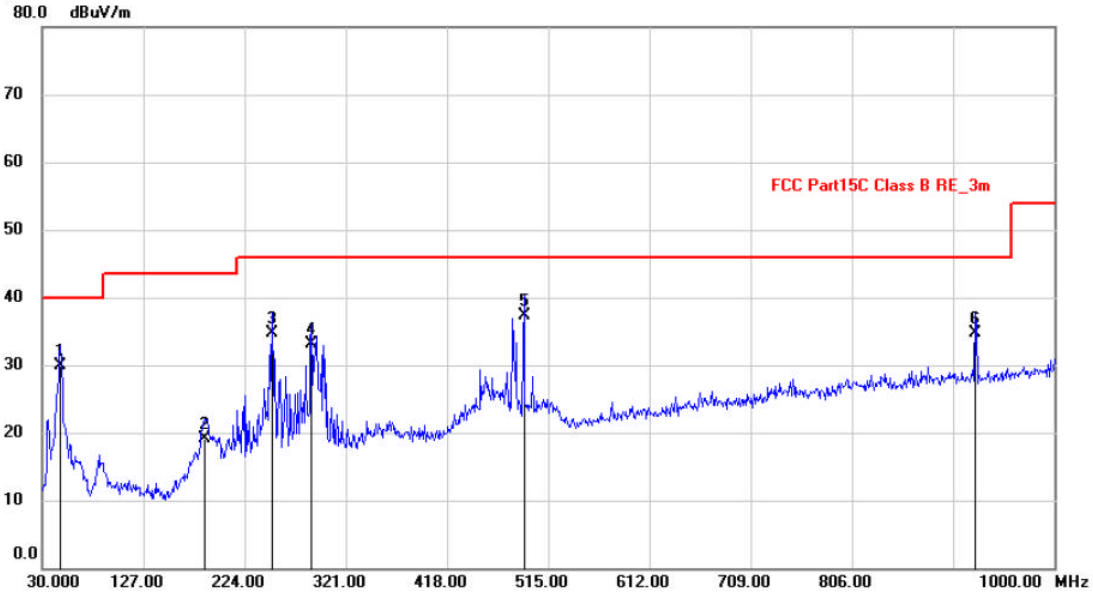

Site
Limit: FCC Part15C RE_3m
Mode: TX Mode
Note:

Polarization: ***Horizontal***
Power: DC 24 V

Temperature: 25° C
Humidity: 60 %

No.	Mk.	Freq.	Reading Level	Correct Factor	Measure-ment	Limit	Over	
		MHz	dBuV	dB	dBuV/m	dBuV/m	dB	Detector
1		47.4600	46.20	-16.37	29.83	40.00	-10.17	QP
2		185.2000	37.54	-18.39	19.15	43.50	-24.35	QP
3		250.1900	50.78	-16.15	34.63	46.00	-11.37	QP
4		288.0200	48.19	-15.07	33.12	46.00	-12.88	QP
5	*	491.7200	47.73	-10.37	37.36	46.00	-8.64	QP
6		924.3400	38.52	-3.79	34.73	46.00	-11.27	QP

*:Maximum data x:Over limit !:over margin 〈Reference Only

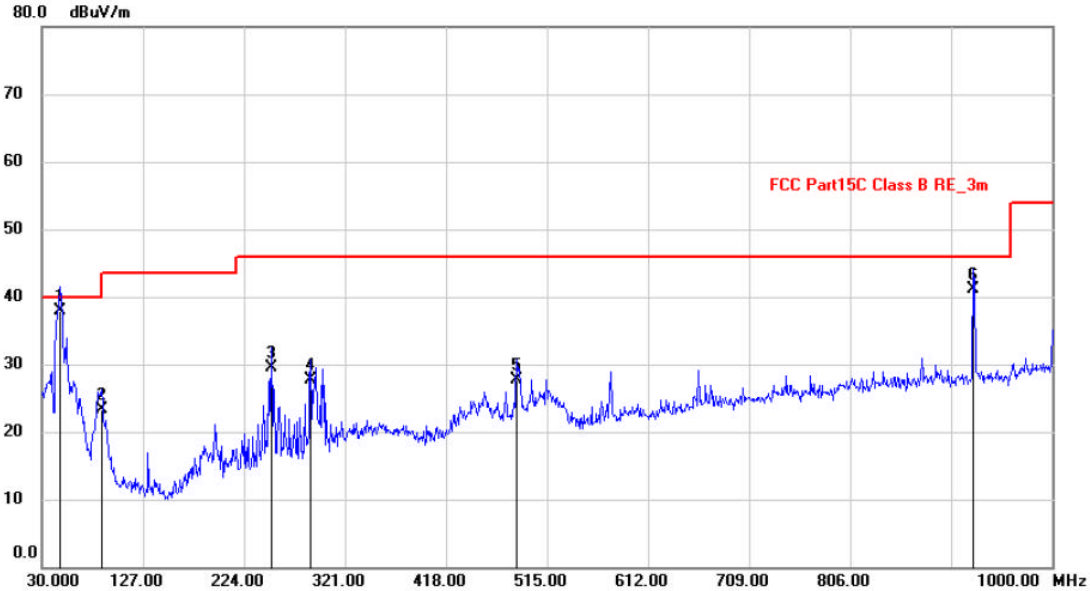

Site

Polarization: ***Vertical***

Temperature: 25° C

Limit: FCC Part15C RE_3m

Power: DC 24 V

Humidity: 60 %

Mode: TX Mode

Note:

No.	Mk.	Freq.	Reading Level	Correct Factor	Measure-ment	Limit	Over	
		MHz	dBuV	dB	dBuV/m	dBuV/m	dB	Detector
1	*	47.4600	54.32	-16.37	37.95	40.00	-2.05	QP
2		87.2300	43.34	-19.97	23.37	40.00	-16.63	QP
3		250.1900	45.56	-16.15	29.41	46.00	-16.59	QP
4		288.0200	42.78	-15.07	27.71	46.00	-18.29	QP
5		485.9000	38.10	-10.42	27.68	46.00	-18.32	QP
6		924.3400	44.95	-3.79	41.16	46.00	-4.84	QP

*:Maximum data x:Over limit !:over margin 〈Reference Only

7.6 CONDUCTED EMISSIONS TEST

Applicable Standard

According to FCC Part 15.207(a)

Conformance Limit

Conducted Emission Limit

Frequency(MHz)	Quasi-peak	Average
0.15-0.5	66-56	56-46
0.5-5.0	56	46
5.0-30.0	60	50

Note: 1. The lower limit shall apply at the transition frequencies
2. The limit decreases in line with the logarithm of the frequency in the range of 0.15 to 0.50MHz.

Remark: Test results were obtained from the following equation:
Measurement (dBμV) = LISN Factor (dB) + Cable Loss (dB) + Reading (dBμV)
Over (dB) = Measurement (dBμV) - Limit (dBμV)

Test Configuration

Test according to clause 6.3 conducted emission test setup

Test Procedure

The EUT was placed on a table which is 0.8m above ground plane.
Maximum procedure was performed on the highest emissions to ensure EUT compliance.
Repeat above procedures until all frequency measured were complete.

Test Results

N/A
EUT adopts DC 24V power supply

7.7 ANTENNA APPLICATION

Antenna Requirement

Standard	Requirement
FCC CRF Part 15.203	An intentional radiator shall be designed to ensure that no antenna other than that furnished by the responsible party shall be used with the device. The use of a permanently attached antenna or of an antenna that uses a unique coupling to the intentional radiator shall be considered sufficient to comply with the provisions of this section. The manufacturer may design the unit so that a broken antenna can be replaced by the user, but the use of a standard antenna jack or electrical connector is prohibited. This requirement does not apply to carrier current devices or to devices operated under the provisions of §15.211, §15.213, §15.217, §15.219, or §15.221. Further, this requirement does not apply to intentional radiators that must be professionally installed, such as perimeter protection systems and some field disturbance sensors, or to other intentional radiators which, in accordance with §15.31(d), must be measured at the installation site. However, the installer shall be responsible for ensuring that the proper antenna is employed so that the limits in this part are not exceeded.

For intentional device, according to FCC 47 CFR Section 15.203, an intentional radiator shall be designed to ensure that no antenna other than that furnished by the responsible party shall be used with the device. And according to FCC 47 CFR Section 15.247 (b), if transmitting antennas of directional gain greater than 6dBi are used, the power shall be reduced by the amount in dB that the directional gain of the antenna exceeds 6dBi.

Result

PASS.

The EUT has 1 antenna: a Omni-directional. the gain is 2 dBi;

Note: ☒ Antenna use a permanently attached antenna which is not replaceable.
☐ Not using a standard antenna jack or electrical connector for antenna replacement
☐ The antenna has to be professionally installed (please provide method of installation)

which in accordance to section 15.203, please refer to the internal photos.

Note: The antenna is bonded with silicone adhesive

--------- END OF REPORT --------