| | |
|---|---|
| | **Annex A: System Check** |
| | **Project Name : T472** |
| | **Report Number: FCC16073812-4** |

# I. RESULTS

| TYPE | BAND | PARAMETERS |
|---|---|---|
| **Validation** | **CW835** | Measurement 1: Validation Plane with Dipole device position on Middle Channel in CW mode |
| **Validation** | **CW835** | Measurement 2: Validation Plane with Dipole device position on Middle Channel in CW mode |
| **Validation** | **CW1900** | Measurement 3: Validation Plane with Dipole device position on Middle Channel in CW mode |
| **Validation** | **CW1900** | Measurement 4: Validation Plane with Dipole device position on Middle Channel in CW mode |

# MEASUREMENT 1

BODY

Type: Validation measurement (Complete)

Date of measurement: 16/7/2016

Measurement duration: 11 minutes 42 seconds

## A. Experimental conditions.

| | |
|---|---|
| **Area Scan** | dx=8mm dy=8mm |
| **ZoomScan** | 5x5x7,dx=8mm dy=8mm dz=5mm,Complete |
| **Phantom** | Validation plane |
| **Device Position** | Dipole |
| **Band** | CW835 |
| **Channels** | Middle |
| **Signal** | CW (Crest factor: 1.0) |
| **Conversion factor** | 5.07 |

## B. SAR Measurement Results

Middle Band SAR (Channel -1):

| | |
|---|---|
| **Frequency (MHz)** | 835.000000 |
| **Relative permittivity (real part)** | 55.219501 |
| **Relative permittivity (imaginary part)** | 20.868099 |
| **Conductivity (S/m)** | 0.968048 |
| **Variation (%)** | -0.110000 |

| SURFACE SAR | VOLUME SAR |
|---|---|
| 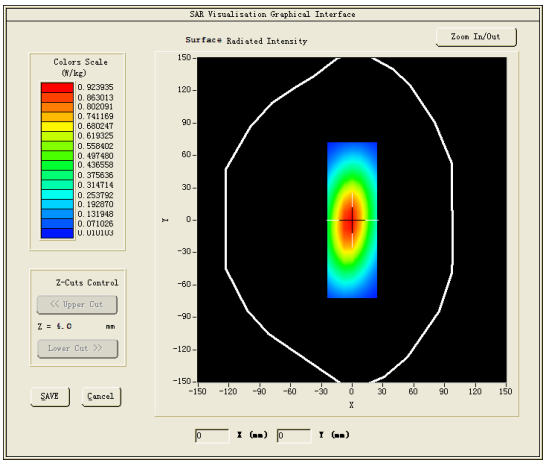  | 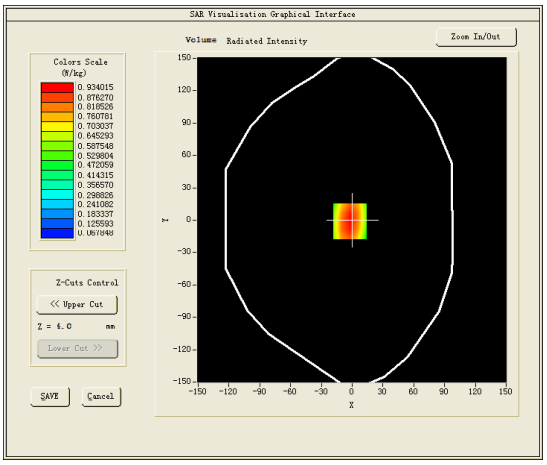  |

**Maximum location: X=-2.00, Y=-1.00**

**SAR Peak: 1.37 W/kg**

| | |
|---|---|
| **SAR 10g (W/Kg)** | 6.22746 |
| **SAR 1g (W/Kg)** | 9.60713 |

| Z (mm) | 0.00 | 4.00 | 9.00 | 14.00 | 19.00 | 24.00 | 29.00 |
|---|---|---|---|---|---|---|---|
| SAR (W/Kg) | 1.2796 | 0.9340 | 0.6314 | 0.4339 | 0.2996 | 0.2062 | 0.1409 |

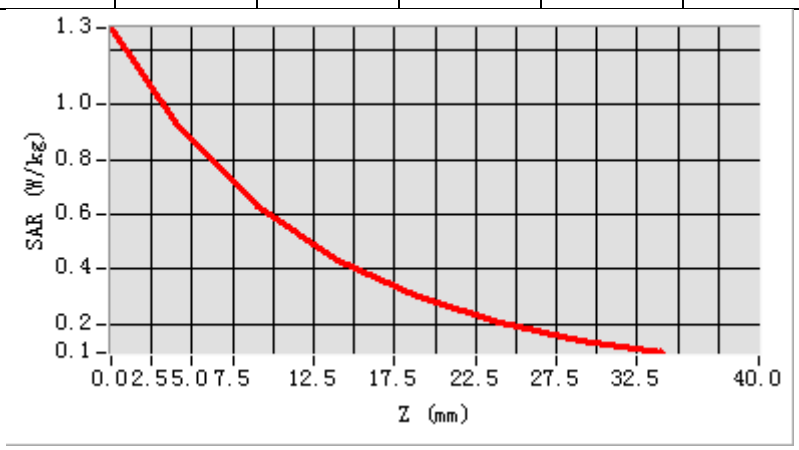


| 3D screen shot | Hot spot position |
|---|---|
| 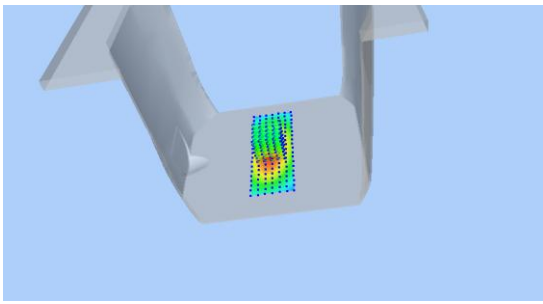 | 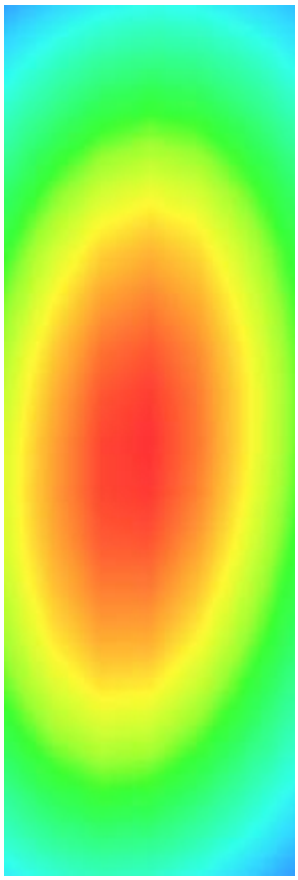 |

# MEASUREMENT 2

HEAD

Type: Validation measurement (Complete)

Date of measurement: 16/7/2016

Measurement duration: 11 minutes 43 seconds

## A. Experimental conditions.

| | |
|---|---|
| **Area Scan** | dx=8mm dy=8mm |
| **ZoomScan** | 5x5x7,dx=8mm dy=8mm dz=5mm,Complete |
| **Phantom** | Validation plane |
| **Device Position** | Dipole |
| **Band** | CW835 |
| **Channels** | Middle |
| **Signal** | CW (Crest factor: 1.0) |
| **Conversion factor** | 5.07 |

## B. SAR Measurement Results

Middle Band SAR (Channel -1):

| | |
|---|---|
| **Frequency (MHz)** | 835.000000 |
| **Relative permittivity (real part)** | 41.450901 |
| **Relative permittivity (imaginary part)** | 19.477900 |
| **Conductivity (S/m)** | 0.903558 |
| **Variation (%)** | 0.250000 |

| SURFACE SAR | VOLUME SAR |
|---|---|
| 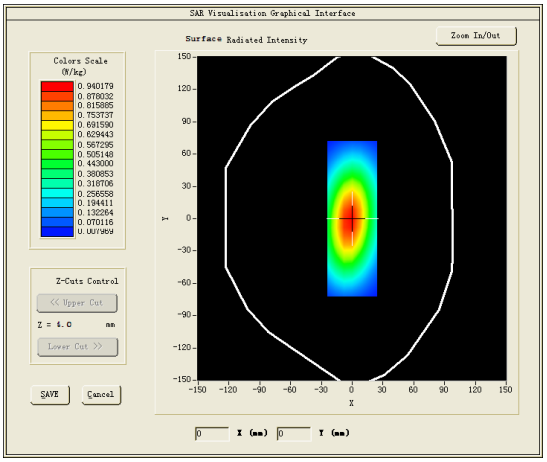  | 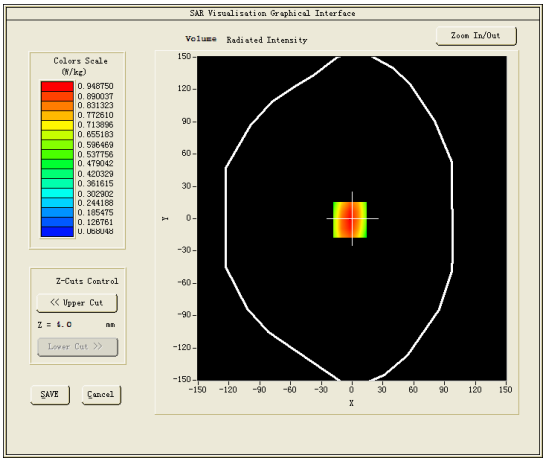  |

**Maximum location: X=-2.00, Y=-1.00**

**SAR Peak: 1.30 W/kg**

| | |
|---|---|
| **SAR 10g (W/Kg)** | 5.91216 |
| **SAR 1g (W/Kg)** | 9.13485 |

| Z (mm) | 0.00 | 4.00 | 9.00 | 14.00 | 19.00 | 24.00 | 29.00 |
|---|---|---|---|---|---|---|---|
| SAR (W/Kg) | 1.3002 | 0.9487 | 0.6411 | 0.4403 | 0.3039 | 0.2089 | 0.1425 |

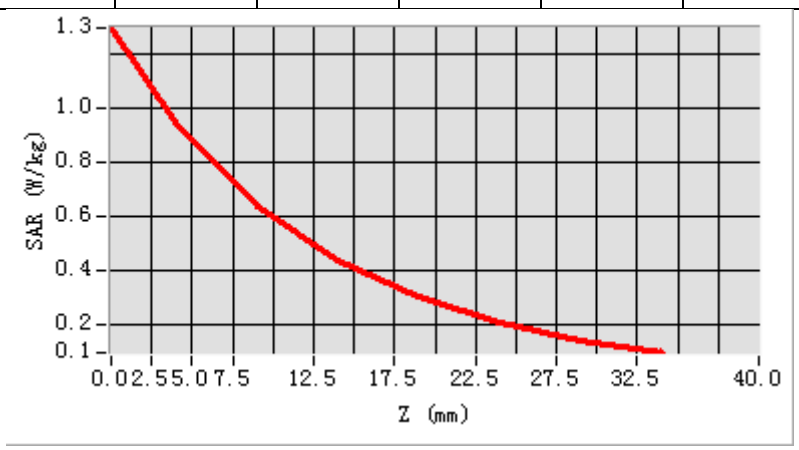


| 3D screen shot | Hot spot position |
|---|---|
| 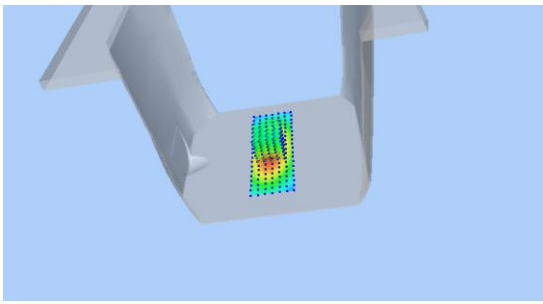 | 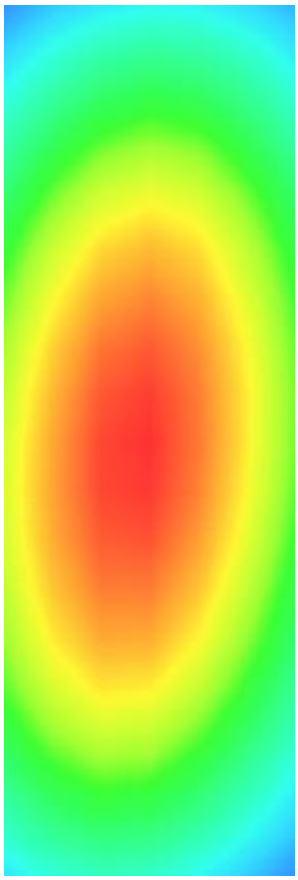 |

# MEASUREMENT 3

BODY

Type: Validation measurement (Complete)

Date of measurement: 18/7/2016

Measurement duration: 11 minutes 8 seconds

## A. Experimental conditions.

| | |
|---|---|
| **Area Scan** | dx=8mm dy=8mm |
| **ZoomScan** | 5x5x7,dx=8mm dy=8mm dz=5mm,Complete |
| **Phantom** | Validation plane |
| **Device Position** | Dipole |
| **Band** | CW1900 |
| **Channels** | Middle |
| **Signal** | CW (Crest factor: 1.0) |
| **Conversion factor** | 4.78 |

## B. SAR Measurement Results

Middle Band SAR (Channel -1):

| | |
|---|---|
| **Frequency (MHz)** | 1900.000000 |
| **Relative permittivity (real part)** | 53.147202 |
| **Relative permittivity (imaginary part)** | 14.472600 |
| **Conductivity (S/m)** | 1.527663 |

| | |
|---|---|
| **Variation (%)** | -0.160000 |

| **SURFACE SAR** | **VOLUME SAR** |
|---|---|
| 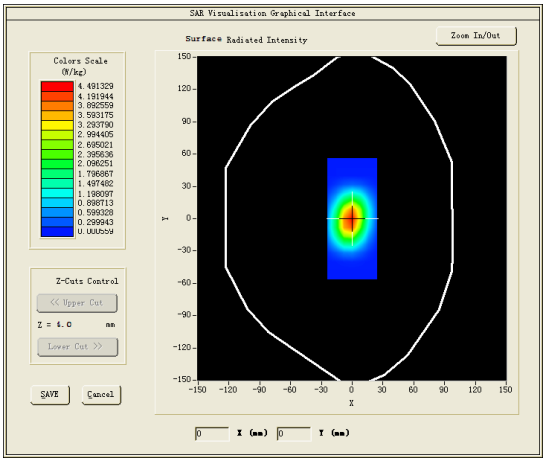 | 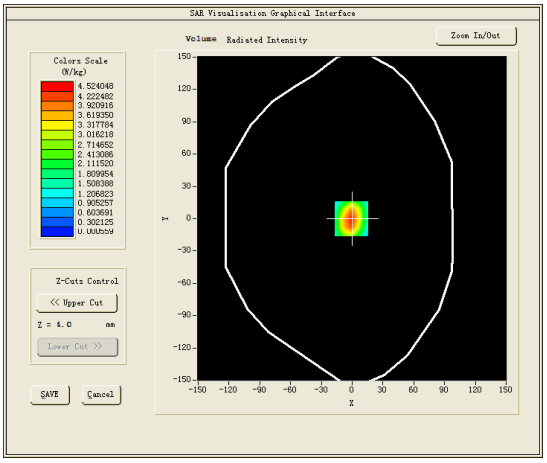 |

**Maximum location: X=-1.00, Y=0.00**

**SAR Peak: 7.23 W/kg**

| | |
|---|---|
| **SAR 10g (W/Kg)** | 21.44791 |
| **SAR 1g (W/Kg)** | 42.78533 |

| Z (mm) | 0.00 | 4.00 | 9.00 | 14.00 | 19.00 | 24.00 | 29.00 |
|---|---|---|---|---|---|---|---|
| SAR (W/Kg) | 7.2625 | 4.5240 | 2.4193 | 1.3215 | 0.7144 | 0.3718 | 0.1784 |

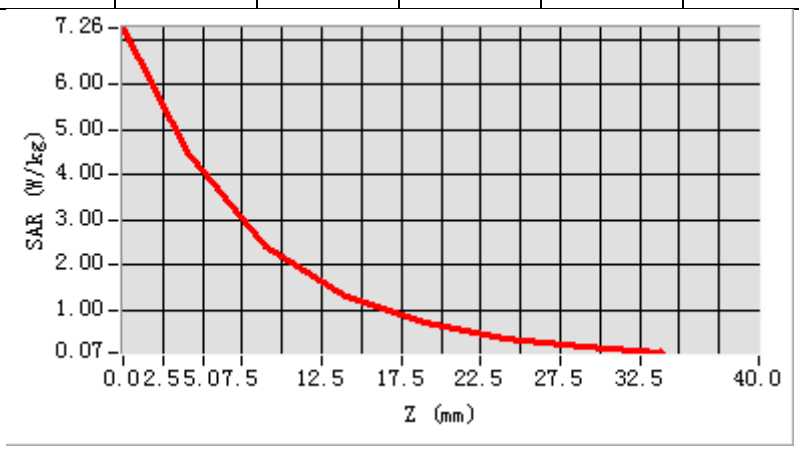


| 3D screen shot | Hot spot position |
|---|---|
| 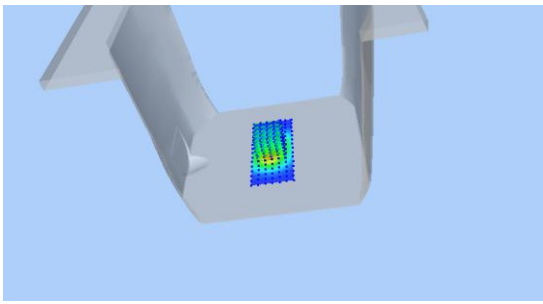 | 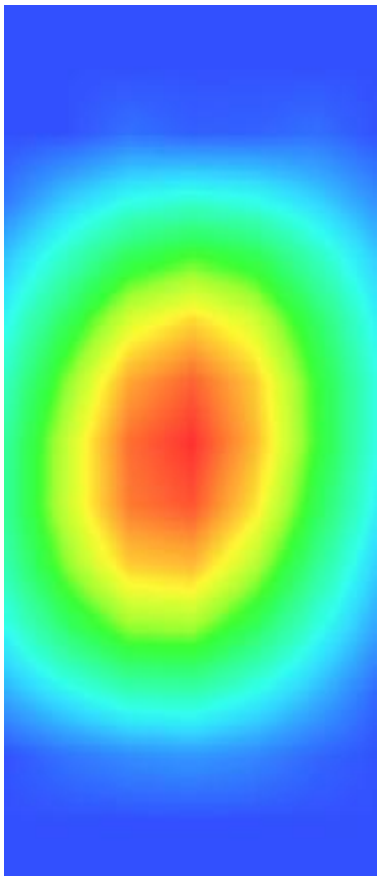 |

# MEASUREMENT 4

HEAD

Type: Validation measurement (Complete)

Date of measurement: 18/7/2016

Measurement duration: 13 minutes 45 seconds

## A. Experimental conditions.

| | |
|---|---|
| **Area Scan** | dx=8mm dy=8mm |
| **ZoomScan** | 5x5x7,dx=8mm dy=8mm dz=5mm,Complete |
| **Phantom** | Validation plane |
| **Device Position** | Dipole |
| **Band** | CW1900 |
| **Channels** | Middle |
| **Signal** | CW (Crest factor: 1.0) |
| **Conversion factor** | 4.78 |

## B. SAR Measurement Results

Middle Band SAR (Channel -1):

| | |
|---|---|
| **Frequency (MHz)** | 1900.000000 |
| **Relative permittivity (real part)** | 53.157902 |
| **Relative permittivity (imaginary part)** | 14.322700 |
| **Conductivity (S/m)** | 1.511841 |

| | |
|---|---|
| **Variation (%)** | 0.330000 |

| **SURFACE SAR** | **VOLUME SAR** |
|---|---|
| 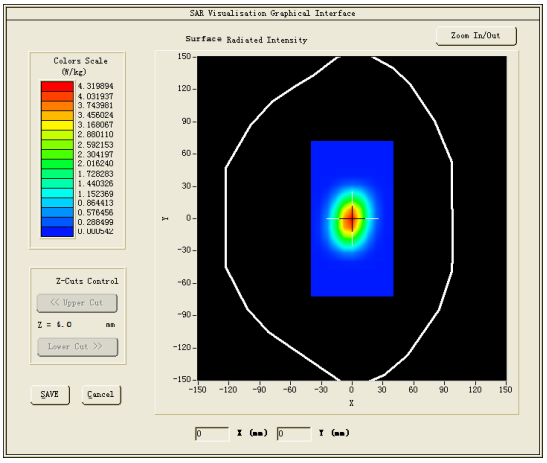 | 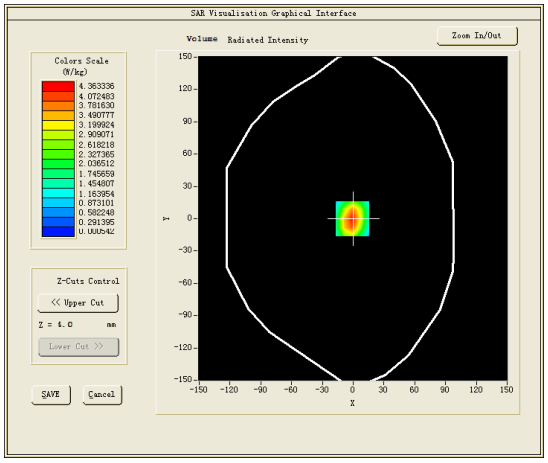 |

**Maximum location: X=-1.00, Y=0.00**

**SAR Peak: 6.98 W/kg**

| | |
|---|---|
| **SAR 10g (W/Kg)** | 20.62172 |
| **SAR 1g (W/Kg)** | 41.14412 |

| Z (mm) | 0.00 | 4.00 | 9.00 | 14.00 | 19.00 | 24.00 | 29.00 |
|---|---|---|---|---|---|---|---|
| SAR (W/Kg) | 7.0084 | 4.3633 | 2.3305 | 1.2711 | 0.6827 | 0.3505 | 0.1629 |

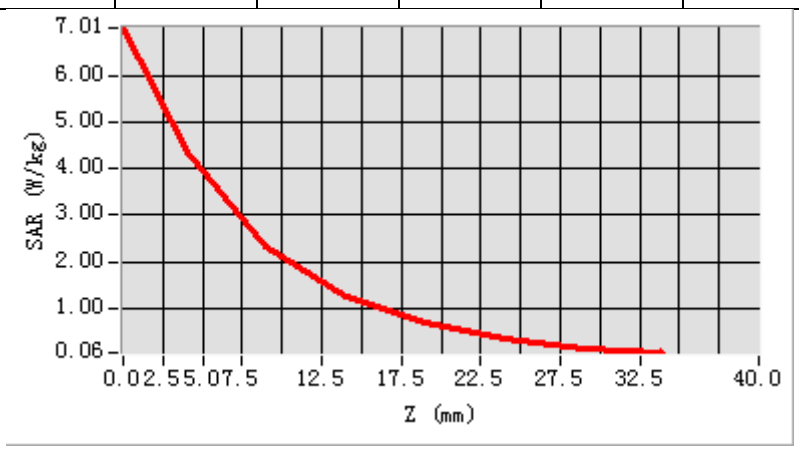


| 3D screen shot | Hot spot position |
|---|---|
| 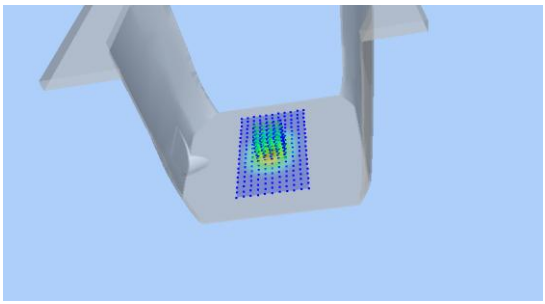 | 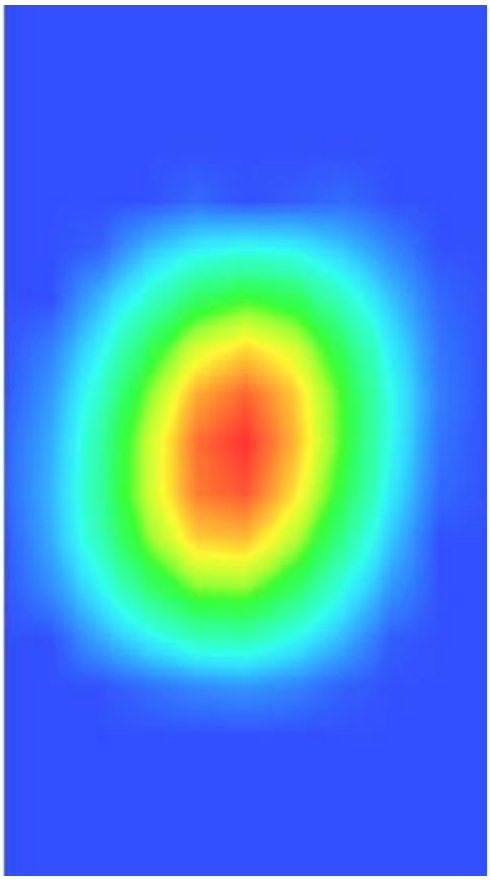 |