FCC RF Test Report

APPLICANT	:	Nokia Shanghai Bell Co., Ltd.
EQUIPMENT	:	Nokia FastMile 5G Receiver
BRAND NAME	:	Nokia
MODEL NAME	:	5G16-B
FCC ID	:	2ADZR5G16B
STANDARD	:	47 CFR Part 2, 22, 24, 27, 96
CLASSIFICATION	:	PCS Licensed Transmitter (PCB)
TEST DATE(S)	:	Jun. 23, 2024 ~ Jun. 26, 2024

We, Sporton International Inc. (ShenZhen), would like to declare that the tested sample has been evaluated in accordance with the procedures given in ANSI C63.26-2015 and shown compliance with the applicable technical standards.

The test results in this report apply exclusively to the tested model / sample. Without written approval of Sporton International Inc. (ShenZhen), the test report shall not be reproduced except in full.

Jason Jia

Approved by: Jason Jia

ACCREDITED
Cert #5145.01

Sporton International Inc. (ShenZhen)

1/F, 2/F, Bldg 5, Shiling Industrial Zone, Xinwei Village, Xili, Nanshan, Shenzhen, 518055

People's Republic of China

TABLE OF CONTENTS

REVISION HISTORY **3**

SUMMARY OF TEST RESULT **4**

1 GENERAL DESCRIPTION **5**

1.1 Applicant 5
1.2 Manufacturer 5
1.3 Product Feature of Equipment Under Test 5
1.4 Product Specification of Equipment Under Test 5
1.5 Modification of EUT 6
1.6 Testing Location 7
1.7 Test Software 7
1.8 Applicable Standards 7

2 TEST CONFIGURATION OF EQUIPMENT UNDER TEST **8**

2.1 Test Mode 8
2.2 Connection Diagram of Test System 8
2.3 Support Unit used in test configuration and system 9
2.4 Frequency List of Low/Middle/High Channels 9

3 RADIATED TEST ITEMS **15**

3.1 Measuring Instruments 15
3.2 Test Setup 15
3.3 Test Result of Radiated Test 16
3.4 Radiated Spurious Emission 17

4 LIST OF MEASURING EQUIPMENT **18**

5 MEASUREMENT UNCERTAINTY **19**

APPENDIX A. TEST RESULTS OF RADIATED TEST **A1**

APPENDIX B. SETUP PHOTOGRAPHS **B1**

REVISION HISTORY

REPORT NO.	VERSION	DESCRIPTION	ISSUED DATE
FG341901-02J	Rev. 01	Initial issue of report	Jul. 26, 2024

SUMMARY OF TEST RESULT

Report Section	FCC Rule	Description	Limit	Result	Remark
3.4	§2.1053 §22.917(a) §24.238(a) §27.53(g) §27.53(h)	Radiated Spurious Emission (5G NR n2) (5G NR n5) (5G NR n25) (5G NR n66) (5G NR n71)	< 43+10log$_{10}$(P[Watts])	PASS	Under limit 10.04 dB at 14424.92 MHz
	§2.1053 §27.53(m)(2)(v)	Radiated Spurious Emission (5G NR n7, n41)	<43+10log$_{10}$(P[Watts])		
	§2.1051 §96.41	Radiated Spurious Emission (5G NR n48)	−40dBm/MHz		
	§2.1053 §27.53(l)(2) §27.53 (n)(2)	Radiated Spurious Emission (5G NR n77)	-13dBm/MHz		

Remark 1 : The other conducted test items of inter band CA were cover by 5G NR single carrier due to the CA power is reduced according to 3GPP MPR.

Conformity Assessment Condition:
1. The test results (PASS/FAIL) with all measurement uncertainty excluded are presented against the regulation limits or in accordance with the requirements stipulated by the applicant/manufacturer who shall bear all the risks of non-compliance that may potentially occur if measurement uncertainty is taken into account. 2. The measurement uncertainty please refer to each test result in the section “Measurement Uncertainty”
Disclaimer:
The product specifications of the EUT presented in the test report that may affect the test assessments are declared by the manufacturer who shall take full responsibility for the authenticity.

1 General Description

1.1 Applicant

Nokia Shanghai Bell Co., Ltd.
388#, Ningqiao Road, China (Shanghai) Pilot Free Trade Zone, Shanghai 201206, China

1.2 Manufacturer

Nokia Solutions and Networks Oy
Karakaari 7, 02610 Espoo, Finland

1.3 Product Feature of Equipment Under Test

Product Feature	
Equipment	Nokia FastMile 5G Receiver
Brand Name	Nokia
Model Name	5G16-B
FCC ID	2ADZR5G16B
IMEI Code	Radiation: 358937920000248
HW Version	3TG02508Axxx(x:A~Z)
SW Version	5GReceiver-HG-2_D240200BieT0001E0643
EUT Stage	Identical Prototype

1.4 Product Specification of Equipment Under Test

Standards-related Product Specification	
Tx Frequency	5G NR n2 : 1850 MHz - 1910 MHz 5G NR n5 : 824 MHz - 849 MHz 5G NR n7 : 2500 MHz - 2570 MHz 5G NR n25 : 1850 MHz - 1915 MHz 5G NR n41 : 2496 MHz - 2690 MHz 5G NR n48 : 3550 MHz - 3700 MHz 5G NR n66 : 1710 MHz - 1755 MHz 5G NR n71: 663 MHz - 698 MHz 5G NR n77: 3450 MHz - 3550 MHz; 3700 MHz - 3980 MHz
Rx Frequency	5G NR n2 : 1930 MHz - 1990 MHz 5G NR n5 : 869 MHz - 894 MHz 5G NR n7 : 2620 MHz - 2690 MHz 5G NR n25 : 1850 MHz - 1915 MHz 5G NR n41 : 2496 MHz - 2690 MHz 5G NR n48 : 3550 MHz - 3700 MHz 5G NR n66 : 2110 MHz - 2200 MHz 5G NR n71: 617 MHz - 652 MHz 5G NR n77: 3450 MHz - 3550 MHz; 3700 MHz - 3980 MHz

Uplink CA Bands Under test	n25A-n66A, n5A-n66A, N66A-n25A n25A-n71A, n5A-n41A, N71A-n25A n25A-n41A, n5A-n77A(27O), N41A-n25A n25A-n77A(27O), n5A-n77A(27Q), n77A(27O)- n25A n25A-n77A(27Q), n66A-n71A, n77A(27Q)- n25A n2A-n66A, n66A-n77A(27O), n66A- n2A n2A-n71A, n66A-n77A(27Q), n71A- n2A n2A-n41A, n71A-n77A(27O), n41A- n2A n2A-n77A(27O), n71A-n77A(27Q), n77A(27O)- n2A n2A-n77A(27Q), n7A-n66A, n77A(27Q)- n2A n41A-n77A(27O), n66A- n5A, n77A(27O)- n41A n41A-n77A(27Q), n41A- n5A, n77A(27Q)- n41A n41A-n48A, n77A(27O)- n5A, n48A- n41A n41A-n66A, n77A(27Q)- n5A, n66A- n41A n41A-n71A, n71A- n66A, n71A- n41A n48A-n77A(27O), n77A(27O)- n66A, n77A(27O)- n48A n48A-n77A(27Q), n77A(27Q)- n66A, n77A27(Q)- n48A n48A-n66A, n77A(27O)- n71A, n66A- n48A n48A-n71A, n77A(27Q)- n71A, n66A-n7A n71A-n48A
Type of Modulation	CP-OFDM: QPSK / 16QAM / 64QAM / 256QAM DFT-s-OFDM: PI/2 BPSK / QPSK / 16QAM / 64QAM / 256QAM

Note:

1. For all uplink inter-band CA combination, only the worst combination is tested and reflected in the report.
2. There are two Samples under test, Sample 1 is 1st antenna, Sample 2 is 2nd antenna and they are with the same Gain but different manufacturers. According to the difference, we choose sample 1 to full test and the sample 2 is verified the worse case for Radiation Spurious Emission among NR WWAN Bands which can refer to FG341901-02H
3. For 5G NR n77 inter CA combination , we choice worse band of single carrier bands among part 27O/Q to test.

Specification of Accessory				
AC Adapter	**Brand Name**	NOKIA	**Model Name**	G1418B-540-028-2.5G

1.5 Modification of EUT

No modifications are made to the EUT during all test items.

1.6 Testing Location

Sporton International Inc. (ShenZhen) is accredited to ISO/IEC 17025:2017 by American Association for Laboratory Accreditation with Certificate Number 5145.01.

Test Firm	Sporton International Inc. (ShenZhen)		
Test Site Location	101, 1st Floor, Block B, Building 1, No. 2, Tengfeng 4th Road, Fenghuang Community, Fuyong Street, Baoan District, Shenzhen City, Guangdong Province 518103 People's Republic of China TEL: +86-755-86066985		
Test Site No.	**Sporton Site No.**	**FCC Designation No.**	**FCC Test Firm Registration No.**
	03CH02-SZ	CN1256	421272

1.7 Test Software

Item	Site	Manufacture	Name	Version
1.	03CH02-SZ	AUDIX	E3	6.2009-8-24a

1.8 Applicable Standards

According to the specifications of the manufacturer, the EUT must comply with the requirements of the following standards:

- 47 CFR Part 2, 47 CFR Part 2, 22, 24, 27, 96
- ANSI C63.26-2015
- FCC KDB 971168 D01 Power Meas License Digital Systems v03r01
- FCC KDB 412172 D01 Determining ERP and EIRP v01r01

Remark:

1. All test items were verified and recorded according to the standards and without any deviation during the test.
2. This EUT has also been tested and complied with the requirements of FCC Part 15, Subpart B, recorded in a separate test report.

2 Test Configuration of Equipment Under Test

2.1 Test Mode

Antenna port conducted and radiated test items listed below are performed according to KDB 971168 D01 Power Meas License Digital Systems v03r01 with maximum output power.

Radiated measurements are performed by rotating the EUT in three different orthogonal test planes to find the maximum emission. (Y/Z-Plane)

Test Items	Band	Bandwidth (MHz)						Modulation				RB #			Test Channel		
		1.4	3	5	10	15	20	QPSK	16QAM	64QAM	256QAM	1	Half	Full	L	M	H
Radiated Spurious Emission	n41A-n25A	Worst Case														v	
	n41A-n77A	Worst Case														v	
	n41A-n48A	Worst Case														v	
	n77A-n48A	Worst Case														v	
	n5A-n41A	Worst Case														v	
	n66A-n71A	Worst Case														v	
	n66A-n77A	Worst Case														v	
	n71A-n77A	Worst Case														v	
	n7A-n66A	Worst Case														v	
Note	1. The mark “v “ means that this configuration is chosen for testing 2. The mark “-“ means that this bandwidth is not supported. 3. The device is investigated from 30MHz to 10 times of fundamental signal for radiated spurious emission test under different RB size/offset and modulations in exploratory test. Subsequently, only the worst case emissions are reported. 4. 5G NR n25 overlaps the entire frequency range of 5G NR n2. Therefore, the test results provided in this report covers 5G NR n25 as well as 5G NR n2.																

2.2 Connection Diagram of Test System

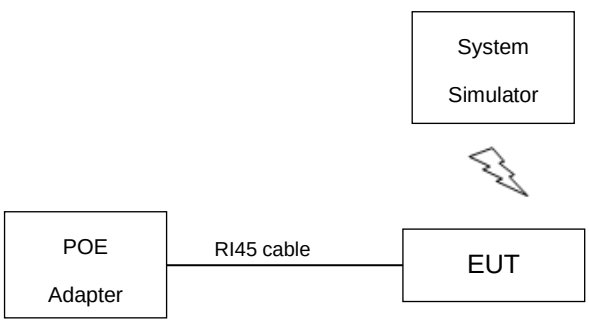

This example is connection diagram of EUT test configurations.

. For detail, please refer to test mode configuration and setup photographs for each test item.

2.3 Support Unit used in test configuration and system

Item	Equipment	Trade Name	Model No.	FCC ID	Data Cable	Power Cord
1.	Base Station	Anritsu	MT8821C	N/A	N/A	Unshielded, 1.8 m
2.	NR Base Station	Anritsu	MT8000A	N/A	N/A	Unshielded, 1.8 m

2.4 Frequency List of Low/Middle/High Channels

5G NR n5 Channel and Frequency List				
BW [MHz]	Channel/Frequency(MHz)	Lowest	Middle	Highest
25	Channel	-	167300	-
	Frequency	-	836.5	-
20	Channel	166800	167300	167800
	Frequency	834	836.5	839
15	Channel	166300	167300	168300
	Frequency	831.5	836.5	841.5
10	Channel	165800	167300	168800
	Frequency	829	836.5	844
5	Channel	165300	167300	169300
	Frequency	826.5	836.5	846.5

5G NR n7 Channel and Frequency List				
BW [MHz]	Channel/Frequency(MHz)	Lowest	Middle	Highest
50	Channel	505000	507000	509000
	Frequency	2525	2535	2545
40	Channel	504000	507000	510000
	Frequency	2520	2535	2550
30	Channel	503000	507000	511000
	Frequency	2515	2535	2555
25	Channel	502500	507000	511500
	Frequency	2512.5	2535	2557.5
20	Channel	502000	507000	512000
	Frequency	2510	2535	2560
15	Channel	501500	507000	512500
	Frequency	2507.5	2535	2562.5
10	Channel	501000	507000	513000
	Frequency	2505	2535	2565
5	Channel	500500	507000	513500
	Frequency	2502.5	2535	2567.5

5G NR n25 Channel and Frequency List				
BW [MHz]	Channel/Frequency(MHz)	Lowest	Middle	Highest
45	Channel	374500	376500	378500
	Frequency	1872.5	1882.5	1892.5
40	Channel	374000	376500	379000
	Frequency	1870	1882.5	1895
35	Channel	373500	376500	379500
	Frequency	1867.5	1882.5	1897.5
30	Channel	373000	376500	380000
	Frequency	1865	1882.5	1900
25	Channel	372500	376500	380500
	Frequency	1862.5	1882.5	1902.5
20	Channel	372000	376500	381000
	Frequency	1860	1882.5	1905
15	Channel	371500	376500	381500
	Frequency	1857.5	1882.5	1907.5
10	Channel	371000	376500	382000
	Frequency	1855	1882.5	1910

5	Channel	370500	376500	382500
	Frequency	1852.5	1882.5	1912.5

5G NR n41 Channel and Frequency List				
BW [MHz]	**Channel/Frequency(MHz)**	**Lowest**	**Middle**	**Highest**
100	Channel	509202	518598	528000
	Frequency	2546.01	2592.99	2640
90	Channel	508200	518598	528996
	Frequency	2541	2592.99	2644.98
80	Channel	507204	518598	529998
	Frequency	2536.02	2592.99	2649.99
70	Channel	506202	518598	531000
	Frequency	2531.01	2592.99	2655
60	Channel	505200	518598	531996
	Frequency	2526	2592.99	2659.98
50	Channel	504204	518598	532998
	Frequency	2521.02	2592.99	2664.99
40	Channel	503202	518598	534000
	Frequency	2516.01	2592.99	2670
35	Channel	502704	518598	534498
	Frequency	2513.52	2592.99	2672.49
30	Channel	502200	518598	534996
	Frequency	2511	2592.99	2674.98
20	Channel	501204	518598	535998
	Frequency	2506.02	2592.99	2679.99
15	Channel	500700	518598	536496
	Frequency	2503.5	2592.99	2682.48
10	Channel	500202	518598	537000
	Frequency	2501.01	2592.99	2685

5G NR n48 Channel and Frequency List				
BW [MHz]	Channel/Frequency(MHz)	Lowest	Middle	Highest
40	Channel	638000	641666	645332
	Frequency	3570	3624.99	3679.98
30	Channel	637666	641666	645666
	Frequency	3564.99	3624.99	3684.99
20	Channel	637334	641666	646000
	Frequency	3560.01	3624.99	3690
15	Channel	637168	641666	646166
	Frequency	3557.52	3624.99	3692.49
10	Channel	637000	641666	646332
	Frequency	3555	3624.99	3694.98

5G NR n66 Channel and Frequency List				
BW [MHz]	Channel/Frequency(MHz)	Lowest	Middle	Highest
45	Channel	346500	349000	351500
	Frequency	1732.5	1745	1757.5
40	Channel	346000	349000	352000
	Frequency	1730	1745	1760
35	Channel	345500	349000	352500
	Frequency	1727.5	1745	1762.5
30	Channel	345000	349000	353000
	Frequency	1725	1745	1765
25	Channel	344500	349000	353500
	Frequency	1722.5	1745	1767.5
20	Channel	344000	349000	354000
	Frequency	1720	1745	1770
15	Channel	343500	349000	354500
	Frequency	1717.5	1745	1772.5
10	Channel	343000	349000	355000
	Frequency	1715	1745	1775
5	Channel	342500	349000	355500
	Frequency	1712.5	1745	1777.5

5G NR n71 Channel and Frequency List				
BW [MHz]	Channel/Frequency(MHz)	Lowest	Middle	Highest
20	Channel	134600	136100	137600
	Frequency	673	680.5	688
15	Channel	134100	136100	138100
	Frequency	670.5	680.5	690.5
10	Channel	133600	136100	138600
	Frequency	668	680.5	693
5	Channel	133100	136100	139100
	Frequency	665.5	680.5	695.5

5G n77 Channel and Frequency List for Part 27O				
BW [MHz]	Channel/Frequency(MHz)	Lowest	Middle	Highest
100	Channel	650000	656000	662000
	Frequency	3750	3840	3930
90	Channel	649668	656000	662332
	Frequency	3745.02	3840	3934.98
80	Channel	649334	656000	662666
	Frequency	3740.01	3840	3939.99
70	Channel	649000	656000	663000
	Frequency	3735	3840	3945
60	Channel	648668	656000	663332
	Frequency	3730.02	3840	3949.98
50	Channel	648334	656000	663666
	Frequency	3725.01	3840	3954.99
40	Channel	648000	656000	664000
	Frequency	3720	3840	3960
30	Channel	647668	656000	664332
	Frequency	3715.02	3840	3964.98
25	Channel	647500	656000	664500
	Frequency	3712.5	3840	3967.5
20	Channel	647334	656000	664666
	Frequency	3710.01	3840	3969.99
15	Channel	647168	656000	664832
	Frequency	3707.52	3840	3972.48
10	Channel	647000	656000	665000
	Frequency	3705	3840	3975

5G n77 Channel and Frequency List for Part 27Q				
BW [MHz]	Channel/Frequency(MHz)	Lowest	Middle	Highest
100	Channel	-	633334	-
	Frequency	-	3500.01	-
90	Channel	633000	633334	633666
	Frequency	3495	3500.01	3504.99
80	Channel	632668	633334	634000
	Frequency	3490.02	3500.01	3510
70	Channel	632334	633334	634332
	Frequency	3485.01	3500.01	3514.98
60	Channel	632000	633334	634666
	Frequency	3480	3500.01	3519.99
50	Channel	631668	633334	635000
	Frequency	3475.02	3500.01	3525
40	Channel	631334	633334	635332
	Frequency	3470.01	3500.01	3529.98
30	Channel	631000	633334	635666
	Frequency	3465	3500.01	3534.99
25	Channel	630834	633334	635832
	Frequency	3462.51	3500.01	3537.48
20	Channel	630668	633334	636000
	Frequency	3460.02	3500.01	3540
15	Channel	630500	633334	636166
	Frequency	3457.5	3500.01	3542.49
10	Channel	630334	633334	636332
	Frequency	3455.01	3500.01	3544.98

3 Radiated Test Items

3.1 Measuring Instruments

See list of measuring instruments of this test report.

3.2 Test Setup

3.2.1 For radiated test below 30MHz

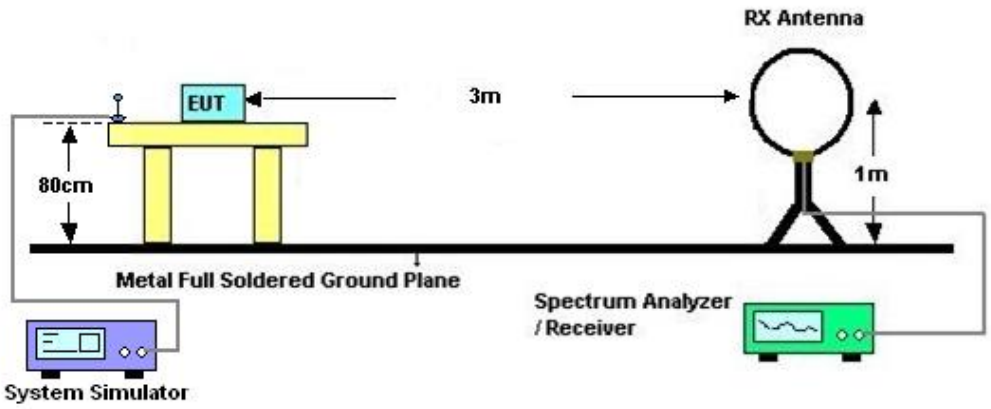

3.2.2 For radiated test from 30MHz to 1GHz

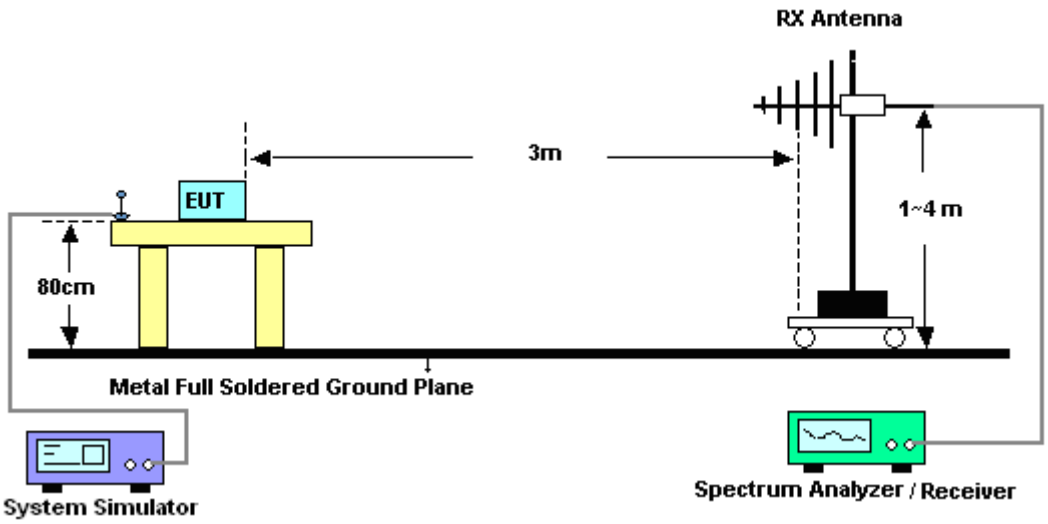

3.2.3 For radiated test above 1GHz

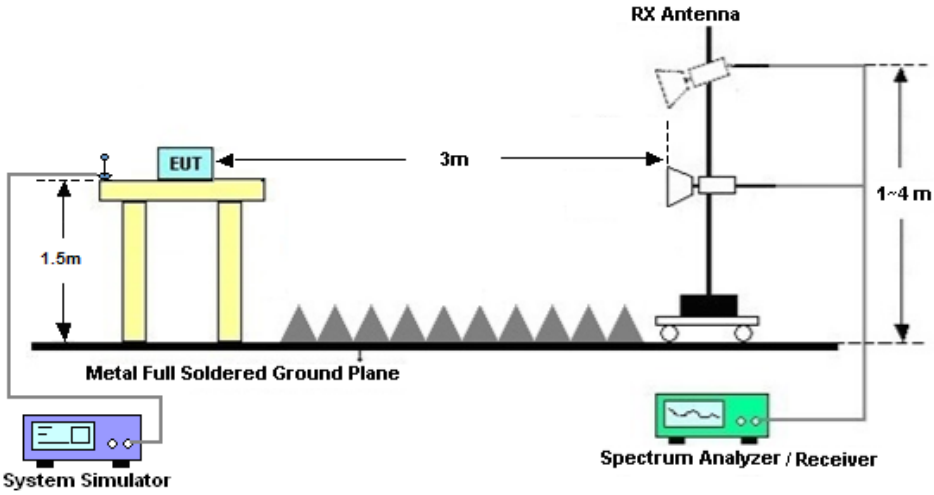

3.3 Test Result of Radiated Test

The low frequency, which started from 9 kHz to 30MHz, was pre-scanned and the result which was 20dB lower than the limit line was not reported.

Please refer to Appendix A.

3.4 Radiated Spurious Emission

3.4.1 Description of Radiated Spurious Emission

The radiated spurious emission was measured by substitution method according to ANSI C63.26.

For 5G NR n5, n25, n66, n71, n77, n7, n41

The power of any emission outside of the authorized operating frequency ranges must be attenuated below the transmitter power (P) by a factor of at least 43 + 10 log (P) dB.

For 5G NR n48

The power of any emission outside of the authorized operating frequency ranges must be attenuated below the transmitter power (P) by a factor of at least -40dBm / MHz.

The spectrum is scanned from 30 MHz up to a frequency including its 10th harmonic.

3.4.2 Test Procedures

1. The testing follows ANSI C63.26 Section 5.5
2. The EUT was placed on a turntable with 0.8 meter height for frequency below 1GHz and 1.5 meter height for frequency above 1GHz respectively above ground.
3. The EUT was set 3 meters from the receiving antenna mounted on the antenna tower.
4. The table was rotated 360 degrees to determine the position of the highest spurious emission.
5. The height of the receiving antenna is varied between 1m to 4m to search the maximum spurious emission for both horizontal and vertical polarizations.
6. During the measurement, the system simulator parameters were set to force the EUT transmitting at maximum output power.
7. Make the measurement with the spectrum analyzer's RBW = 1MHz, VBW = 3MHz, taking the record of maximum spurious emission.
8. A horn antenna was substituted in place of the EUT and was driven by a signal generator.
9. Tune the output power of signal generator to the same emission level with EUT maximum spurious emission.
10. EIRP (dBm) = S.G. Power – Tx Cable Loss + Tx Antenna Gain
11. ERP (dBm) = EIRP - 2.15
12. The RF fundamental frequency should be excluded against the limit line in the operating frequency band.
    For 5G NR n5, n25, n66, n71, n77, n7, n41:
    The limit line is derived from 43 + 10log(P)dB below the transmitter power P(Watts)
    = P(W)- [43 + 10log(P)] (dB)
    = [30 + 10log(P)] (dBm) - [43 + 10log(P)] (dB)
    = -13dBm.
    For 5G NR n48:
    The limit line is −40dBm/MHz

4 List of Measuring Equipment

Instrument	Manufacturer	Model No.	Serial No.	Characteristics	Calibration Date	Test Date	Due Date	Remark
EXA Spectrum Analyzer	KEYSIGHT	N9010A	MY55150213	10Hz~44GHz	Jul. 07, 2023	Jun. 23, 2024~ Jun. 26, 2024	Jul. 06, 2024	Radiation (03CH02-SZ)
Loop Antenna	R&S	HFH2-Z2	100354	9kHz~30MHz	Jul. 28, 2022	Jun. 23, 2024~ Jun. 26, 2024	Jul. 27, 2024	Radiation (03CH02-SZ)
Bilog Antenna	TeseQ	CBL6112D	35407	30MHz-2GHz	Oct. 24, 2023	Jun. 23, 2024~ Jun. 26, 2024	Oct. 23, 2025	Radiation (03CH02-SZ)
Double Ridge Horn Antenna	ETS-Lindgren	3117	00119436	1GHz~18GHz	Jul. 08, 2023	Jun. 23, 2024~ Jun. 26, 2024	Jul. 07, 2024	Radiation (03CH02-SZ)
HF Amplifier	MITEQ	TTA1840-35 -HG	1871923	18GHz~40GHz	Jul. 07, 2023	Jun. 23, 2024~ Jun. 26, 2024	Jul. 06, 2024	Radiation (03CH02-SZ)
SHF-EHF Horn	com-power	AH-840	101071	18Ghz-40GHz	Apr. 09, 2024	Jun. 23, 2024~ Jun. 26, 2024	Apr. 08, 2025	Radiation (03CH02-SZ)
LF Amplifier	Burgeon	BPA-530	102211	0.01~3000Mhz	Oct. 18, 2023	Jun. 23, 2024~ Jun. 26, 2024	Oct. 17, 2024	Radiation (03CH02-SZ)
HF Amplifier	KEYSIGHT	83017A	MY53270105	0.5GHz~26.5Ghz	Oct. 18, 2023	Jun. 23, 2024~ Jun. 26, 2024	Oct. 17, 2024	Radiation (03CH02-SZ)
AC Power Source	Chroma	61601	61601000304 3	N/A	Oct. 18, 2023	Jun. 23, 2024~ Jun. 26, 2024	Oct. 17, 2024	Radiation (03CH02-SZ)
Turn Table	Chaintek	T-200	N/A	0~360 degree	NCR	Jun. 23, 2024~ Jun. 26, 2024	NCR	Radiation (03CH02-SZ)
Antenna Mast	Chaintek	MBS-400	N/A	1 m~4 m	NCR	Jun. 23, 2024~ Jun. 26, 2024	NCR	Radiation (03CH02-SZ)

NCR: No Calibration Required

5 Measurement Uncertainty

The measurement uncertainties shown below were calculated in accordance with the requirements of ANSI 63.26-2015. All the measurement uncertainty value were shown with a coverage K=2 to indicate 95% level of confidence. The measurement data show herein meets or exceeds the CISPR measurement uncertainty values specified in CISPR 16-4-2 and can be compared directly to specified limit to determine compliance.

Uncertainty of Radiated Emission Measurement (30 MHz ~ 1000 MHz)

Measuring Uncertainty for a Level of Confidence of 95% (U = 2Uc(y))	**2.47dB**

Uncertainty of Radiated Emission Measurement (1 GHz ~ 18 GHz)

Measuring Uncertainty for a Level of Confidence of 95% (U = 2Uc(y))	**3.31dB**

Uncertainty of Radiated Emission Measurement (18 GHz ~ 40 GHz)

Measuring Uncertainty for a Level of Confidence of 95% (U = 2Uc(y))	**3.72dB**

Appendix A. Test Results of Radiated Test

Radiated Spurious Emission

Test Engineer :	Kuang Jia	Temperature :	22~25℃
		Relative Humidity :	48~52%

Pre-scanned harmonic for the different antenna combinations, we choose the worst antenna mode to perform final test and record in the report.

ULCA_n41A-n25A (ANT0+1)									
Channel	Frequency (MHz)	EIRP (dBm)	Limit (dBm)	Over Limit (dB)	SPA Reading (dBm)	S.G. Power (dBm)	TX Cable loss (dB)	TX Antenna Gain (dBi)	Polarization (H/V)
NR n41 BW 100MHz Middle 1RB0,QPSK	5088.34	-59.46	-13	-46.46	-81.42	-65.02	7.14	12.70	H
	7632.51	-54.22	-13	-41.22	-80.87	-57.52	8.30	11.60	H
	10176.68	-49.57	-13	-36.57	-80.89	-51.09	10.48	12.00	H
	5088.34	-59.35	-13	-46.35	-81.47	-64.91	7.14	12.70	V
	7632.51	-54.39	-13	-41.39	-80.96	-57.69	8.30	11.60	V
	10176.68	-51.34	-13	-38.34	-81.41	-52.86	10.48	12.00	V
NR n25 BW 45MHz Middle 1RB0,QPSK	3721.8	-61.16	-13	-48.16	-79.68	-67.91	5.85	12.60	H
	5582.7	-59.01	-13	-46.01	-81.37	-64.81	7.30	13.10	H
	7443.6	-54.42	-13	-41.42	-81.41	-57.57	8.35	11.50	H
	3721.8	-60.98	-13	-47.98	-79.41	-67.73	5.85	12.60	V
	5582.7	-59.00	-13	-46.00	-81.55	-64.80	7.30	13.10	V
	7443.6	-54.29	-13	-41.29	-81.29	-57.44	8.35	11.50	V

Remark: Spurious emissions within 30-1000MHz were found more than 20dB below limit line.

ULCA_n41A-n77A (ANT0+5) for Part 27O									
Channel	Frequency (MHz)	EIRP (dBm)	Limit (dBm)	Over Limit (dB)	SPA Reading (dBm)	S.G. Power (dBm)	TX Cable loss (dB)	TX Antenna Gain (dBi)	Polarization (H/V)
NR n41 BW 100MHz Middle 1RB0,QPSK	5089.00	-58.68	-13	-45.68	-80.60	-64.24	7.14	12.70	H
	7633.50	-58.73	-13	-45.73	-64.73	-62.03	8.30	11.60	H
	10178.00	-55.97	-13	-42.97	-67.05	-57.49	10.48	12.00	H
	5089.00	-58.45	-13	-45.45	-80.55	-64.01	7.14	12.70	V
	7633.50	-58.66	-13	-45.66	-64.58	-61.96	8.30	11.60	V
	10178.00	-57.24	-13	-44.24	-67.07	-58.76	10.48	12.00	V
NR n77 BW 100MHz Middle 1RB0,QPSK	7582.36	-58.61	-13	-45.61	-64.59	-61.91	8.30	11.60	H
	11373.54	-54.66	-13	-41.66	-68.40	-56.18	10.48	12.00	H
	15164.72	-51.74	-13	-38.74	-68.98	-53.44	11.80	13.50	H
	7582.36	-58.13	-13	-45.13	-64.07	-61.43	8.30	11.60	V
	11373.54	-55.13	-13	-42.13	-68.6	-56.65	10.48	12.00	V
	15164.72	-52.76	-13	-39.76	-69.35	-54.46	11.80	13.50	V

Remark: Spurious emissions within 30-1000MHz were found more than 20dB below limit line.

ULCA_n41A-n48A (ANT0+5)									
Channel	Frequency (MHz)	EIRP (dBm)	Limit (dBm)	Over Limit (dB)	SPA Reading (dBm)	S.G. Power (dBm)	TX Cable loss (dB)	TX Antenna Gain (dBi)	Polarization (H/V)
NR n41 BW 100MHz Middle 1RB0,QPSK	5089.00	-58.84	-13	-45.84	-80.76	-64.40	7.14	12.70	H
	7633.50	-58.23	-13	-45.23	-64.23	-61.53	8.30	11.60	H
	10178.00	-53.78	-13	-40.78	-64.86	-55.30	10.48	12.00	H
	5089.00	-58.52	-13	-45.52	-80.62	-64.08	7.14	12.70	V
	7633.50	-58.24	-13	-45.24	-64.16	-61.54	8.30	11.60	V
	10178.00	-56.83	-13	-43.83	-66.66	-58.35	10.48	12.00	V
NR n48 BW 40MHz Middle 1RB0,QPSK	7212.46	-57.48	-40	-17.48	-63.35	-60.78	8.30	11.60	H
	10818.69	-55.38	-40	-15.38	-67.61	-56.90	10.48	12.00	H
	14424.92	-50.04	-40	-10.04	-67.56	-51.74	11.80	13.50	H
	7212.46	-58.54	-40	-18.54	-64.78	-61.84	8.30	11.60	V
	10818.69	-55.87	-40	-15.87	-67.72	-57.39	10.48	12.00	V
	14424.92	-50.82	-40	-10.82	-67.77	-52.52	11.80	13.50	V

Remark: Spurious emissions within 30-1000MHz were found more than 20dB below limit line.

ULCA_n77A-n48A (ANT4+5) for Part 27O									
Channel	Frequency (MHz)	EIRP (dBm)	Limit (dBm)	Over Limit (dB)	SPA Reading (dBm)	S.G. Power (dBm)	TX Cable loss (dB)	TX Antenna Gain (dBi)	Polarization (H/V)
NR n77 BW 100MHz Middle 1RB0,QPSK	7582.36	-55.54	-13	-42.54	-61.52	-58.84	8.30	11.60	H
	11373.54	-54.50	-13	-41.50	-68.24	-56.02	10.48	12.00	H
	15164.72	-51.88	-13	-38.88	-69.12	-53.58	11.80	13.50	H
	7582.36	-57.95	-13	-44.95	-63.89	-61.25	8.30	11.60	V
	11373.54	-54.72	-13	-41.72	-68.19	-56.24	10.48	12.00	V
	15164.72	-52.59	-13	-39.59	-69.18	-54.29	11.80	13.50	V
NR n48 BW 40MHz Middle 1RB0,QPSK	7212.46	-59.36	-40	-19.36	-65.23	-62.66	8.30	11.60	H
	10818.69	-55.49	-40	-15.49	-67.72	-57.01	10.48	12.00	H
	14424.92	-50.55	-40	-10.55	-68.07	-52.25	11.80	13.50	H
	7212.46	-59.11	-40	-19.11	-65.35	-62.41	8.30	11.60	V
	10818.69	-56.20	-40	-16.20	-68.05	-57.72	10.48	12.00	V
	14424.92	-50.37	-40	-10.37	-67.32	-52.07	11.80	13.50	V

Remark: Spurious emissions within 30-1000MHz were found more than 20dB below limit line.

ULCA_n5A-n41A (ANT0+1)									
Channel	Frequency (MHz)	ERP/EIRP (dBm)	Limit (dBm)	Over Limit (dB)	SPA Reading (dBm)	S.G. Power (dBm)	TX Cable loss (dB)	TX Antenna Gain (dBi)	Polarization (H/V)
NR n5 BW 25MHz Middle 1RB0,QPSK	1649.35	-65.57	-13	-52.57	-75.49	-68.82	4.00	9.40	H
	2474.03	-61.53	-13	-48.53	-76.00	-65.10	4.88	10.60	H
	3298.7	-61.30	-13	-48.30	-77.80	-66.23	5.52	12.60	H
	1649.35	-65.79	-13	-52.79	-75.45	-69.04	4.00	9.40	V
	2474.03	-61.49	-13	-48.49	-75.93	-65.06	4.88	10.60	V
	3298.7	-61.42	-13	-48.42	-77.73	-66.35	5.52	12.60	V
NR n41 BW 100MHz Middle 1RB0,QPSK	5089.00	-55.47	-13	-42.47	-77.39	-61.03	7.14	12.70	H
	7633.50	-50.16	-13	-37.16	-76.81	-53.46	8.30	11.60	H
	10178.00	-49.13	-13	-36.13	-80.45	-50.65	10.48	12.00	H
	5089.00	-58.32	-13	-45.32	-80.42	-63.88	7.14	12.70	V
	7633.50	-53.58	-13	-40.58	-80.15	-56.88	8.30	11.60	V
	10178.00	-50.80	-13	-37.80	-80.87	-52.32	10.48	12.00	V

Remark: Spurious emissions within 30-1000MHz were found more than 20dB below limit line.

ULCA_n66A-n71A (ANT1+0)									
Channel	Frequency (MHz)	ERP/EIRP (dBm)	Limit (dBm)	Over Limit (dB)	SPA Reading (dBm)	S.G. Power (dBm)	TX Cable loss (dB)	TX Antenna Gain (dBi)	Polarization (H/V)
NR n66 BW 45MHz Middle 1RB0,QPSK	3466.73	-61.29	-13	-48.29	-78.19	-68.14	5.65	12.50	H
	5170.1	-59.95	-13	-46.95	-81.78	-65.62	7.13	12.80	H
	6893.46	-56.14	-13	-43.14	-81.71	-59.54	8.40	11.80	H
	3466.73	-61.53	-13	-48.53	-78.45	-68.38	5.65	12.50	V
	5170.1	-59.87	-13	-46.87	-81.97	-65.54	7.13	12.80	V
	6893.46	-55.76	-13	-42.76	-81.81	-59.16	8.40	11.80	V
NR n71 BW 20MHz Middle 1RB0,QPSK	1342	-64.18	-13	-51.18	-74.24	-67.43	4.00	9.40	H
	2013	-64.36	-13	-51.36	-75.72	-67.93	4.88	10.60	H
	2684	-61.81	-13	-48.81	-77.06	-66.74	5.52	12.60	H
	1342	-64.78	-13	-51.78	-74.47	-68.03	4.00	9.40	V
	2013	-64.61	-13	-51.61	-75.86	-68.18	4.88	10.60	V
	2684	-61.47	-13	-48.47	-76.74	-66.40	5.52	12.60	V

Remark: Spurious emissions within 30-1000MHz were found more than 20dB below limit line.

ULCA_n66A-n77A (ANT0+5) for Part 27O									
Channel	Frequency (MHz)	EIRP (dBm)	Limit (dBm)	Over Limit (dB)	SPA Reading (dBm)	S.G. Power (dBm)	TX Cable loss (dB)	TX Antenna Gain (dBi)	Polarization (H/V)
NR n66 BW 45MHz Middle 1RB0,QPSK	3466.73	-61.12	-13	-48.12	-78.02	-67.97	5.65	12.50	H
	5170.1	-59.88	-13	-46.88	-81.71	-65.55	7.13	12.80	H
	6893.46	-60.60	-13	-47.60	-65.04	-64.00	8.40	11.80	H
	3466.73	-61.09	-13	-48.09	-78.01	-67.94	5.65	12.50	V
	5170.1	-59.77	-13	-46.77	-81.87	-65.44	7.13	12.80	V
	6893.46	-59.73	-13	-46.73	-64.65	-63.13	8.40	11.80	V
NR n77 BW 100MHz Middle 1RB0,QPSK	7582.36	-58.26	-13	-45.26	-64.24	-61.56	8.30	11.60	H
	11373.54	-54.90	-13	-41.90	-68.64	-56.42	10.48	12.00	H
	15164.72	-51.77	-13	-38.77	-69.01	-53.47	11.80	13.50	H
	7582.36	-58.54	-13	-45.54	-64.48	-61.84	8.30	11.60	V
	11373.54	-54.89	-13	-41.89	-68.36	-56.41	10.48	12.00	V
	15164.72	-52.60	-13	-39.60	-69.19	-54.30	11.80	13.50	V

Remark: Spurious emissions within 30-1000MHz were found more than 20dB below limit line.

ULCA_71A-77A (ANT0+5) for Part 27O									
Channel	Frequency (MHz)	ERP/EIRP (dBm)	Limit (dBm)	Over Limit (dB)	SPA Reading (dBm)	S.G. Power (dBm)	TX Cable loss (dB)	TX Antenna Gain (dBi)	Polarization (H/V)
NR n71 BW 45MHz Middle 1RB0,QPSK	1342	-63.86	-13	-50.86	-73.92	-67.11	4.00	9.40	H
	2013	-64.38	-13	-51.38	-75.74	-67.95	4.88	10.60	H
	2684	-61.39	-13	-48.39	-76.64	-66.32	5.52	12.60	H
	1342	-64.40	-13	-51.40	-74.09	-67.65	4.00	9.40	V
	2013	-63.96	-13	-50.96	-75.21	-67.53	4.88	10.60	V
	2684	-61.29	-13	-48.29	-76.56	-66.22	5.52	12.60	V
NR n77 BW 100MHz Middle 1RB0,QPSK	7582.40	-58.61	-13	-45.61	-64.59	-61.91	8.30	11.60	H
	11373.54	-54.59	-13	-41.59	-68.33	-56.11	10.48	12.00	H
	15164.72	-51.98	-13	-38.98	-69.22	-53.68	11.80	13.50	H
	7582.40	-58.89	-13	-45.89	-64.83	-62.19	8.30	11.60	V
	11373.54	-55.15	-13	-42.15	-68.62	-56.67	10.48	12.00	V
	15164.72	-52.68	-13	-39.68	-69.27	-54.38	11.80	13.50	V

Remark: Spurious emissions within 30-1000MHz were found more than 20dB below limit line.

ULCA_n7A-n66A (ANT0+1)									
Channel	Frequency (MHz)	EIRP (dBm)	Limit (dBm)	Over Limit (dB)	SPA Reading (dBm)	S.G. Power (dBm)	TX Cable loss (dB)	TX Antenna Gain (dBi)	Polarization (H/V)
NR n7 BW 45MHz Middle 1RB0,QPSK	5021.69	-59.43	-13	-46.43	-81.46	-64.99	7.14	12.70	H
	7532.54	-54.36	-13	-41.36	-81.16	-57.66	8.30	11.60	H
	10043.38	-50.46	-13	-37.46	-81.94	-51.98	10.48	12.00	H
	5021.69	-59.67	-13	-46.67	-81.79	-65.23	7.14	12.70	V
	7532.54	-54.33	-13	-41.33	-81.11	-57.63	8.30	11.60	V
	10043.38	-51.95	-13	-38.95	-81.87	-53.47	10.48	12.00	V
NR n66 BW 100MHz Middle 1RB0,QPSK	3466.73	-61.41	-13	-48.41	-78.31	-68.26	5.65	12.50	H
	5170.1	-60.02	-13	-47.02	-81.85	-65.69	7.13	12.80	H
	6893.46	-56.34	-13	-43.34	-81.91	-59.74	8.40	11.80	H
	3466.73	-61.21	-13	-48.21	-78.13	-68.06	5.65	12.50	V
	5170.1	-59.63	-13	-46.63	-81.73	-65.30	7.13	12.80	V
	6893.46	-55.32	-13	-42.32	-81.37	-58.72	8.40	11.80	V

Remark: Spurious emissions within 30-1000MHz were found more than 20dB below limit line.