1. Antenna System Description

The system contains two external antennas (as shown in the figure: antenna 1 and antenna 2). Each antenna has two radiating elements in the form of dipole. Each antenna contains two feeders. The white cable is 2.4GHz, the black cable is 5GHz, and the antenna gain is 5dBi. The antenna is linearly polarized omnidirectional antenna. The system supports beamforming mode, but the system does not generate multiple beams.

2. Measurement Quantity

The pattern of the antenna is omnidirectional radiation of the horizontal plane. The gain of the antenna is 5dBi.

The radiation pattern of the antenna is as follows:

Antenna 1:

2450MHz

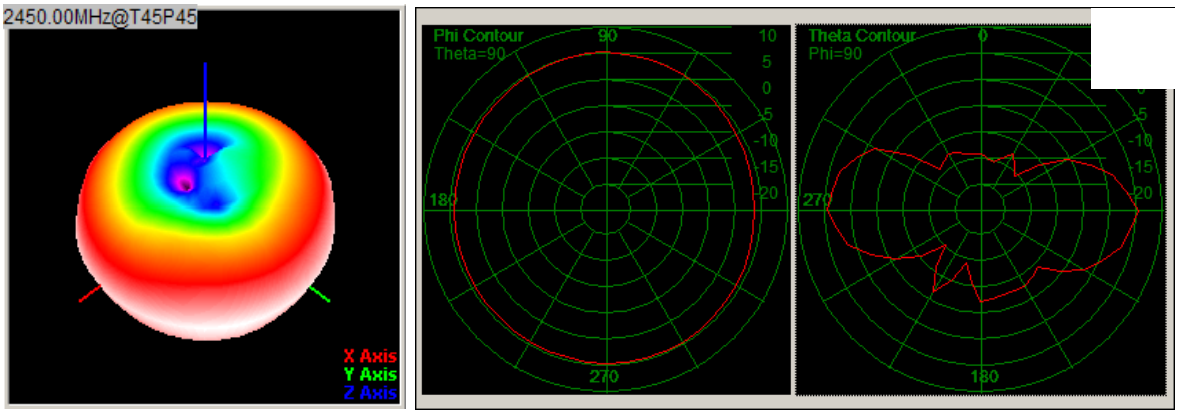

5550MHz

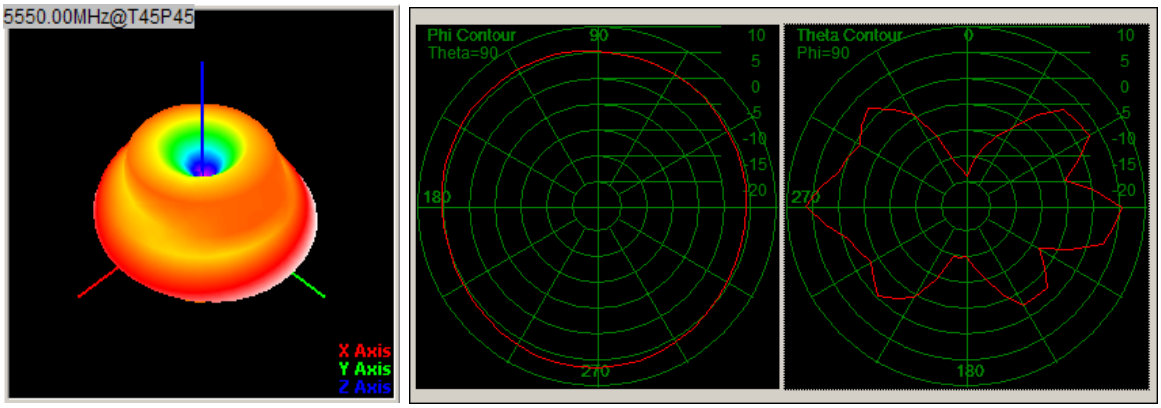

Antenna 2:

2450MHz

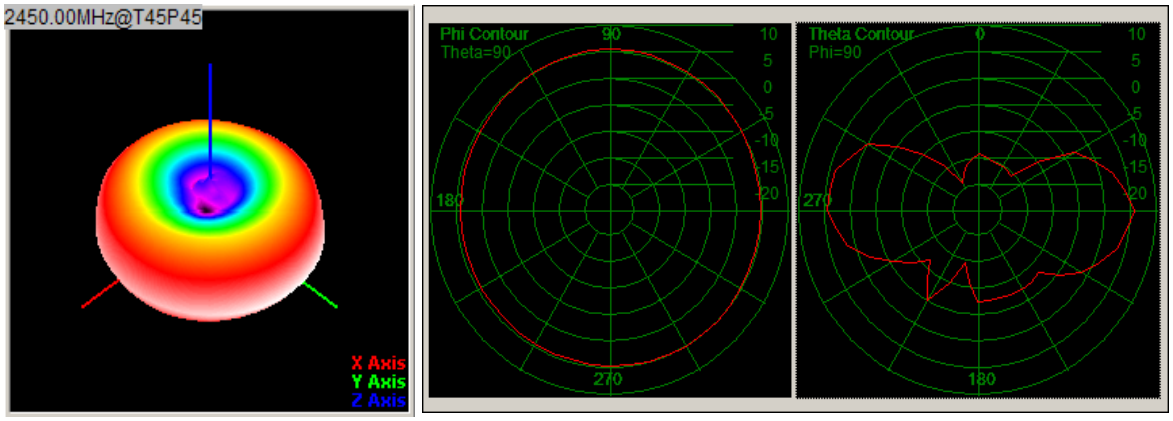

5550MHz

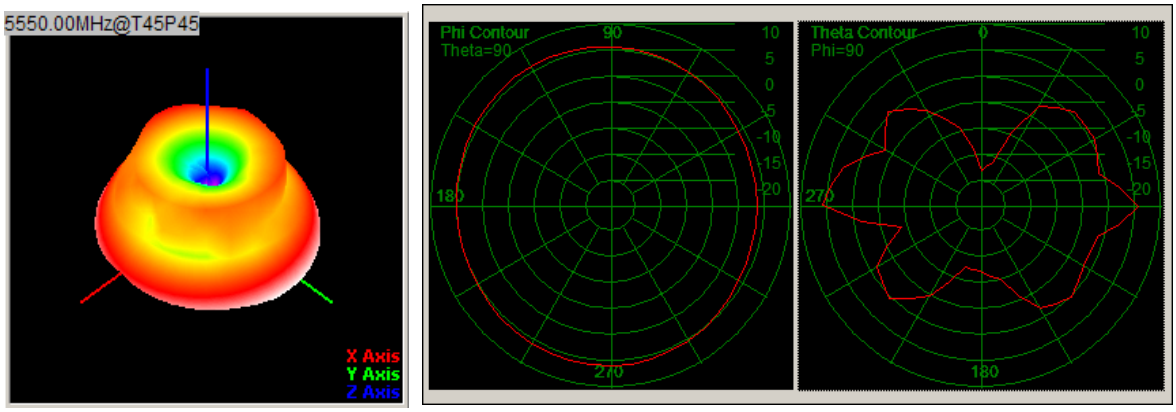

3. Measurement Method

The antenna gain measurement method is gain comparison method. Calculation of gain by comparison with standard horn antenna. The standard horn antenna has been measured in the measurement institution.

4. Measurement Environment

The gain of the antenna was measured in the anechoic chamber.The chamber provides less than –30 dB reflectivity from 400 MHz through 8.5 GHz. The chamber size is:7m*4m*3m. The measurement results are calibrated using a leaky wave horn standard. We can measure the antenna gain and efficiency accurately.

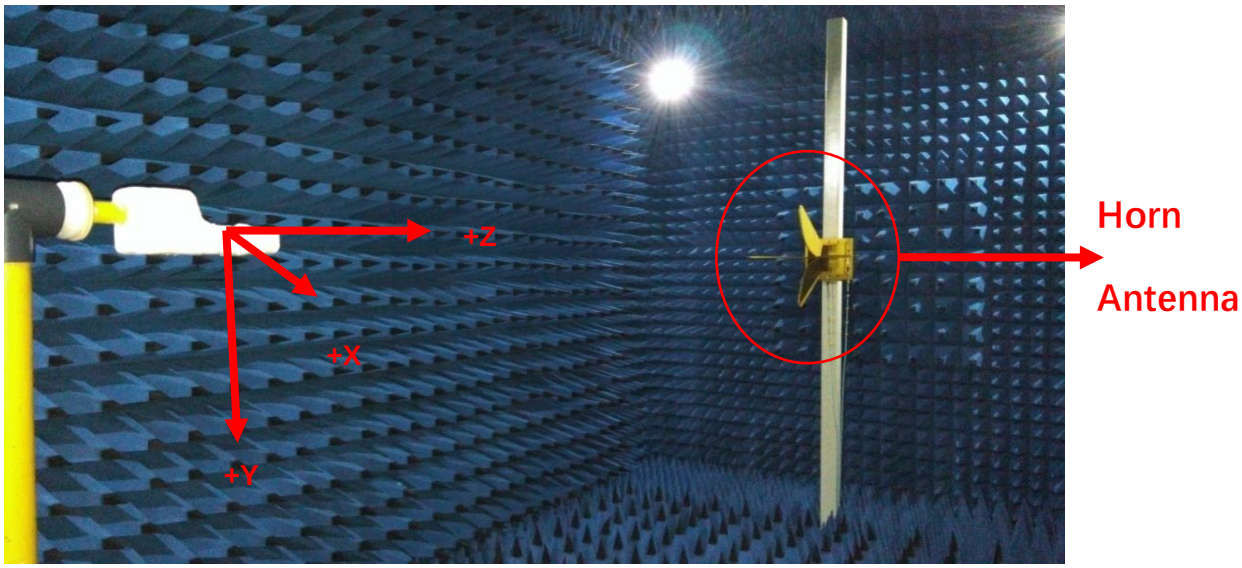

PC:

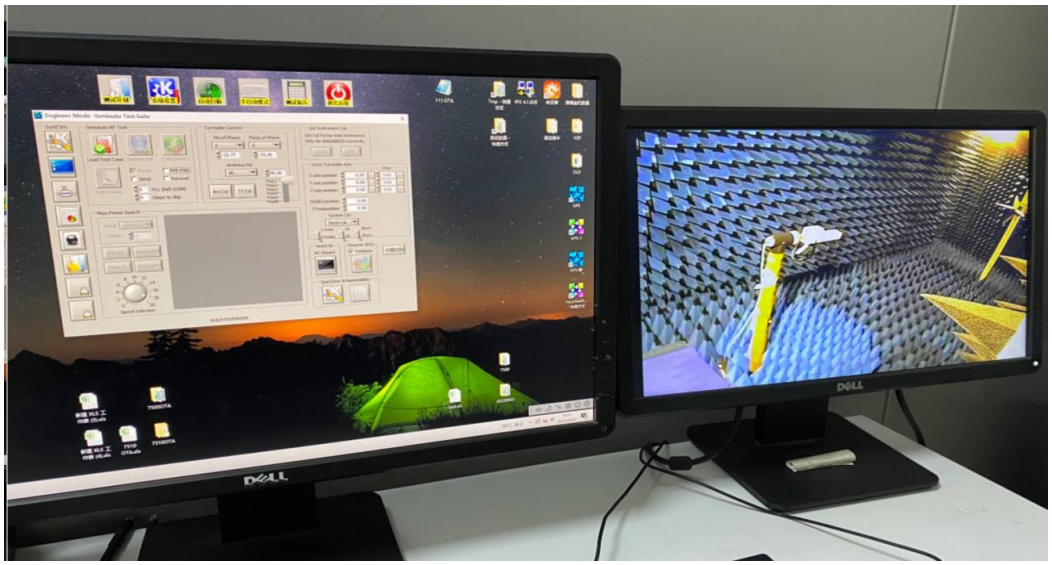

Network Analyzer: Keysight E5071C

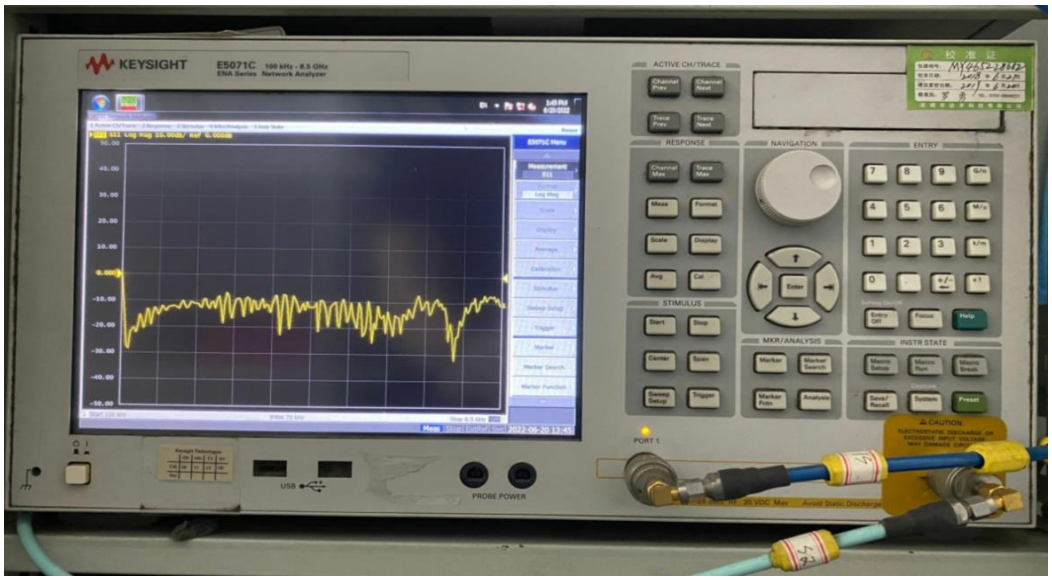

Schematic diagram：

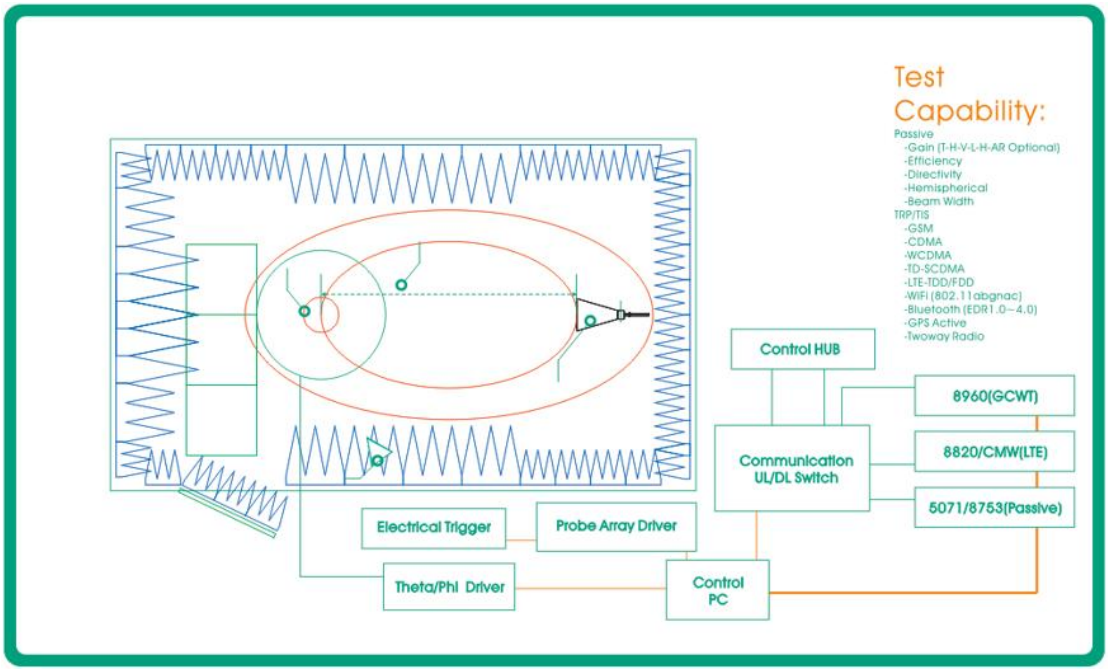

上海增信电子有限公司
Signal Plus Technology Co., Ltd.

规 格 承 认 书
SPECIFICATION FOR APPROVAL

日期
DATE: 2021.06.15

版本
REV.: B

客 户
CUSTOMER: NOKIA SHANGHAI BELL

客 户 料 号
CUSTOMER P/N:

品 名
PART NAME: 外置白色天线2.4G &5G 5dBi 双频双馈，2.4G 1.37白色低损线L=60mm with RF CONN，5G 1.37黑色低损线L=220mm with RF CONN for G-1425G-A

供 方 料 号
SUPPLIER P/N: 6011F00208

送样日期Date: 送样数量Q'TY: Pcs

客户确认CUSTOMER APPROVED BY		
核准 Approvaled by	审核 Checked by	拟制 Prepared by

供方确认SUPPLIER SIGNATURE		
核准 Approvaled by	审核 Checked by	拟制 Prepared by
Jack		andy

ZX-QT-RD-0011-A1

Add:上海市徐汇区桂箐路69号30栋603室 Tel:021-54266190 Fax:021-54266191

Contents

Item		***Description***		***Page***
1.	·····	Cover	·····	1
2.	·····	Content	·····	2
3.	·····	Specification	·····	3
4.	·····	Drawing	·····	4
5.	·····	Test report	·····	5~10

Specification

1. Electrical Properties :

1.1 Frequency Range……..2400~2500MHz&5150~5850MHz
1.2 Impedance …….. 50Ω
1.3 VSWR …… ≤2.0
1.4 Gain …… 5dBi

2. Physical Properties :

2.1 Cable…… RF 137
2.2 Connector …… RF CONN
2.3 Operating Temp. ……. -20℃ ~ +65℃
2.4 Storage Temp. ……. -30℃ ~ +75℃

上海增信电子有限公司
Signal Plus Technology Co., Ltd.

Antenna Test Report

(G-1425G-A)

Tel:021-54266190 Fax:021-54266191 Web:www.zxsignal.com

1. RF Fixture Experiment

1.1 Test Setup

1.1.1 VNA Test Setup

VSWR and Return Loss measurements (S11) were performed using an KeySight E5071C Network Analyzer. The isolation between antennas is also tested. The testing was performed with apparatus in free space.

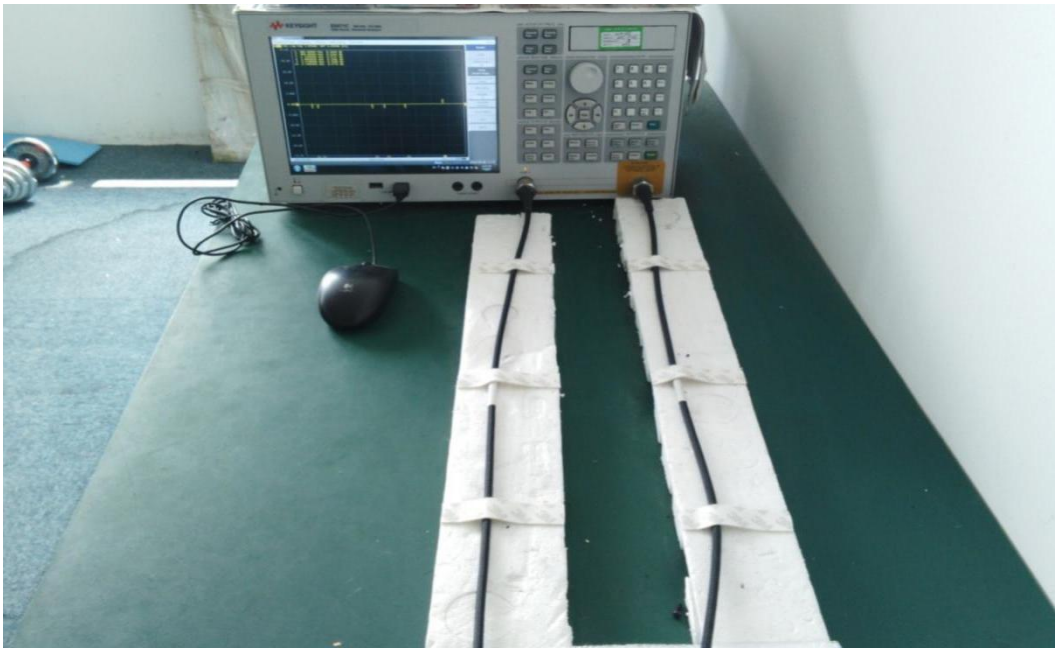

1.1.2 Anechoic Chamber Test Setup

The gain of the antenna was measured in the anechoic chamber.
The chamber provides less than –30 dB reflectivity from 400 MHz through 6 GHz. The chamber size is:7m*4m*3m. The measurement results are calibrated using a leaky wave horn standard. We can measure the antenna gain and efficiency accurately.

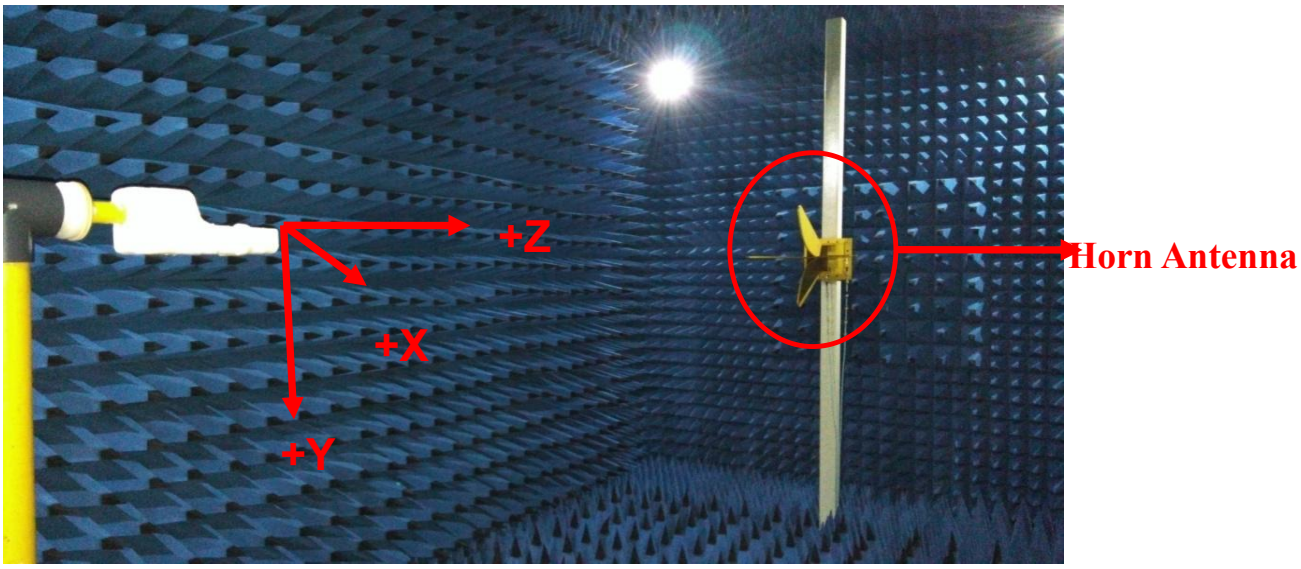

2.Antenna Solution

3.RF matching circuit for different antennas

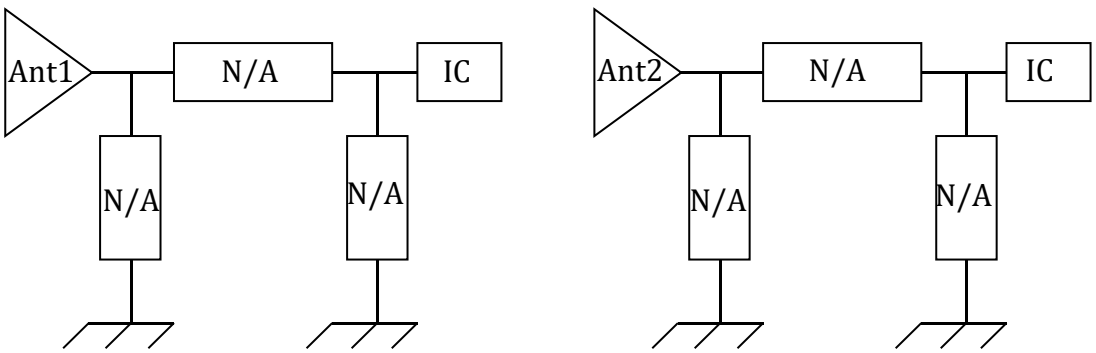

S11(2.4G-Ant)

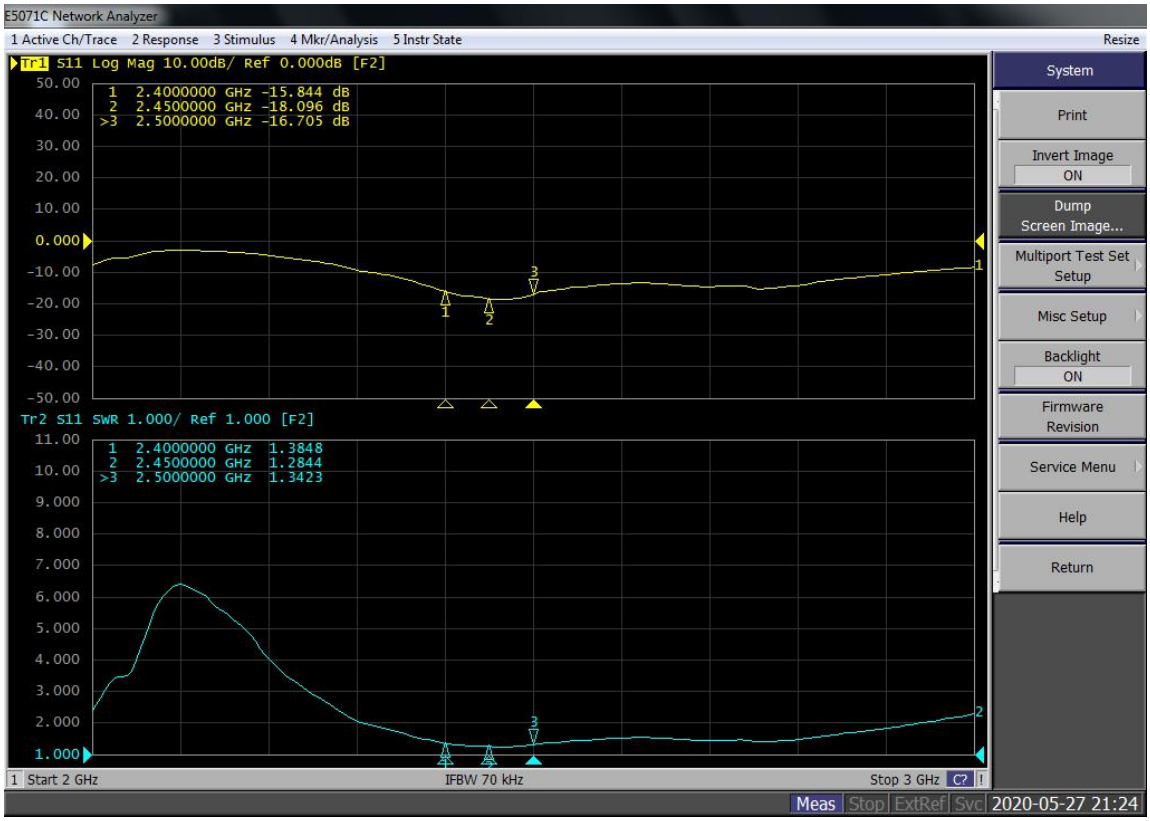

Radiation patterns:3D

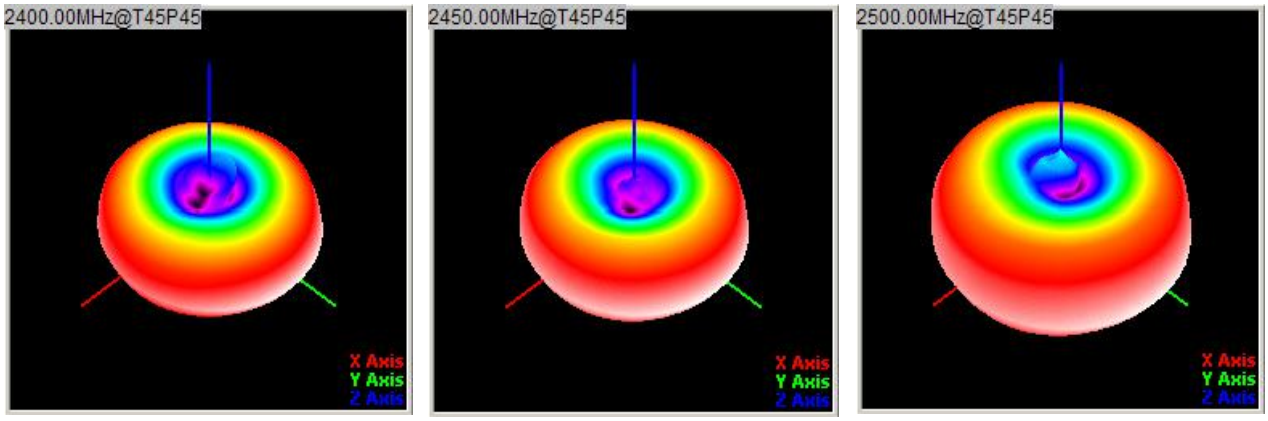

Radiation patterns:2D

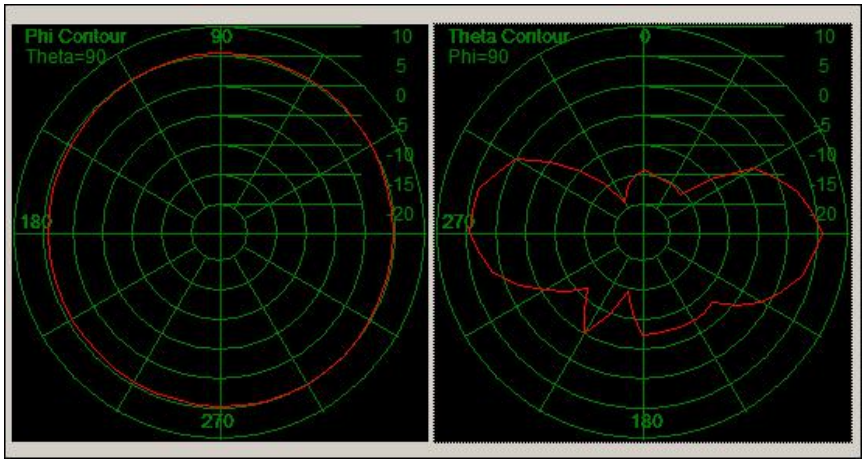

S11(5.8G-Ant)

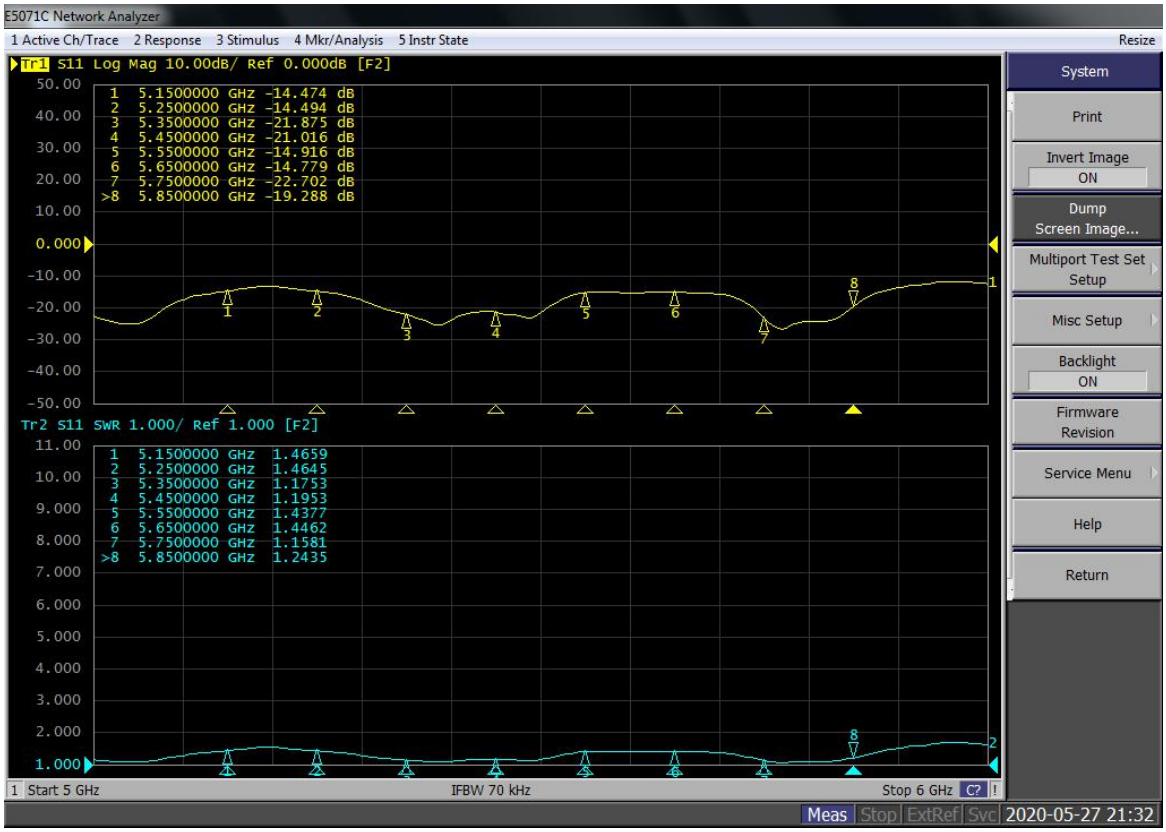

Radiation patterns:3D

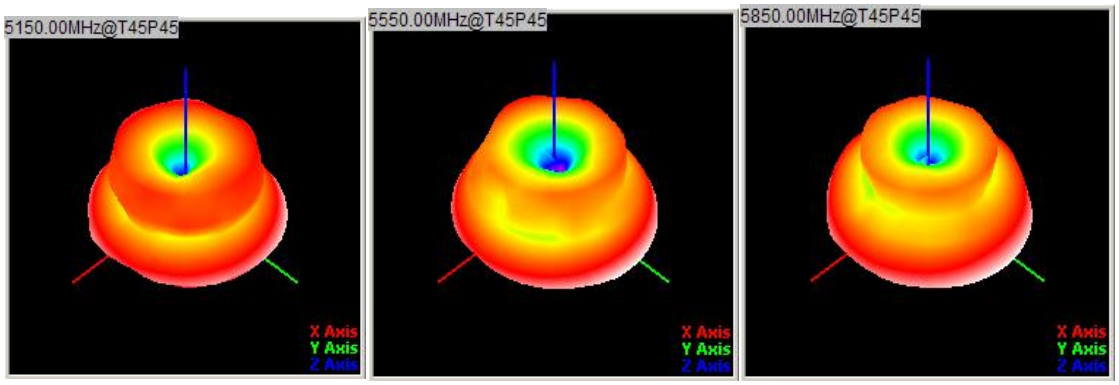

Radiation patterns:2D

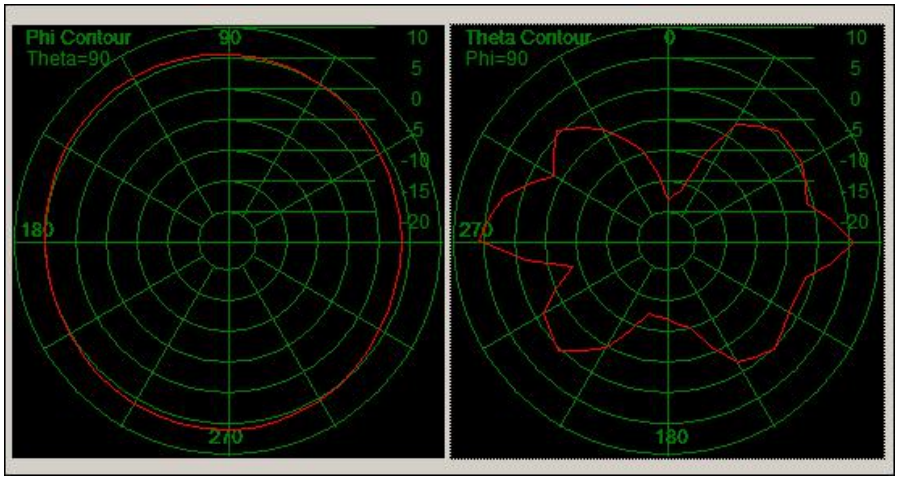

Data Preview

2.4G-Ant:

Freq.(MHz)	2400	2450	2500
VSWR	1.38	1.28	1.34
Gain(dBi)	5.15	5.44	5.02
Eff.%	74.40	76.40	73.80

5.8G-Ant:

Freq.(MHz)	5150	5250	5350	5450	5550	5650	5750	5850
VSWR	1.47	1.46	1.18	1.20	1.44	1.45	1.16	1.24
Gain(dBi)	4.88	5.09	5.14	5.25	5.37	5.27	5.11	5.02
Eff.%	72.30	74.50	74.10	75.60	82.80	83.20	77.20	76.10

S21

Freq.(MHz)	2400	2450	2500	5150	5350	5450	5550	5750	5850
S21	-26.4	-33.2	-29.2	-34.9	-26.8	-24.3	-23.5	-29.3	-34.1

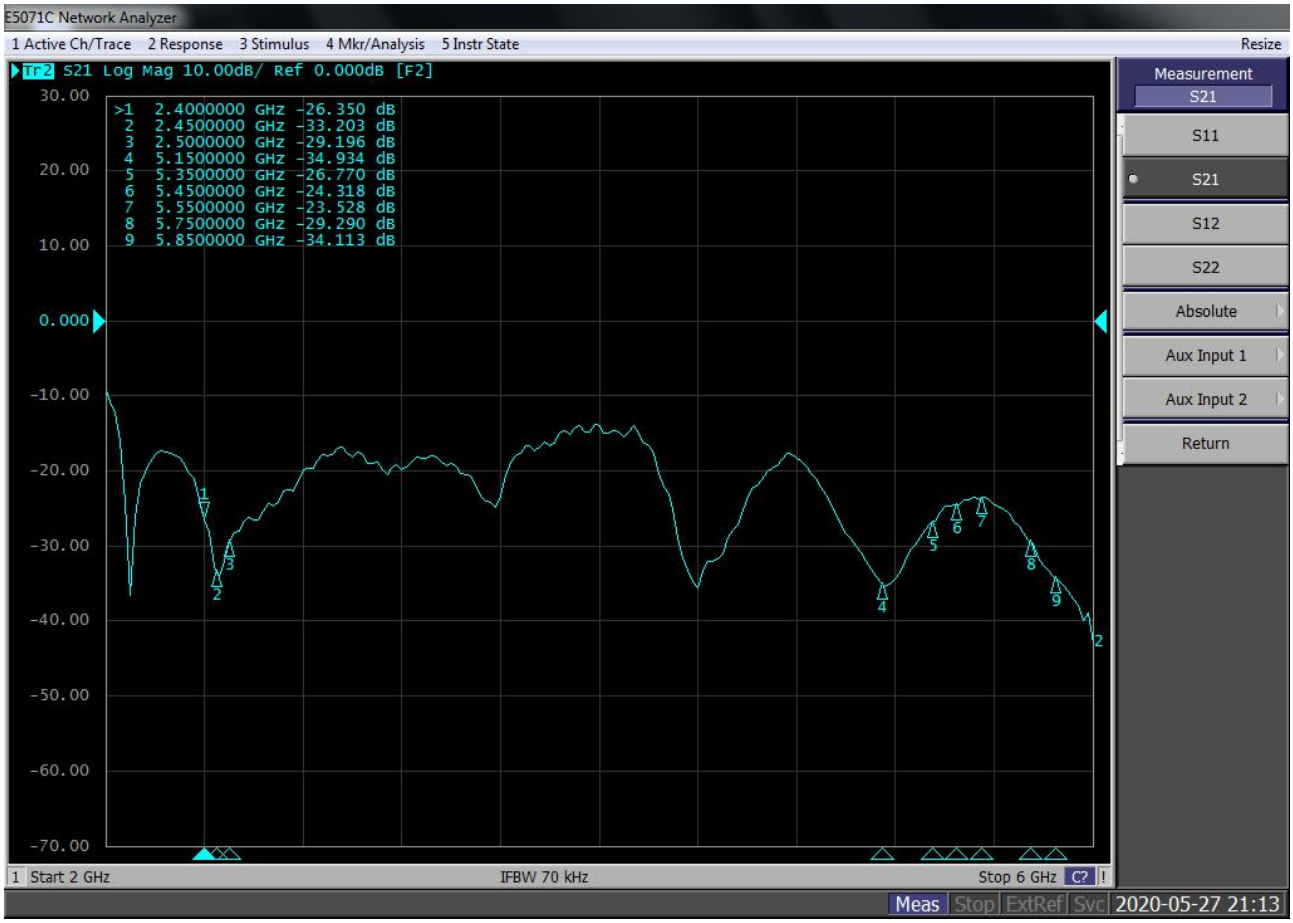

上海增信电子有限公司
Signal Plus Technology Co., Ltd.

规 格 承 认 书
SPECIFICATION FOR APPROVAL

日期
DATE: 2021.06.15

版本
REV.: B

客 户
CUSTOMER: NOKIA SHANGHAI BELL

客 户 料 号
CUSTOMER P/N:

品 名
PART NAME: 外置白色天线2.4G& 5G 5dBi 双频双馈，2.4G 1.37白色低损线L=200mm with RF CONN，5G 1.37黑色低损线L=70mm with RF CONN for G-1425G-A

供 方 料 号
SUPPLIER P/N: 6011F00207

送样日期Date: 送样数量Q'TY: Pcs

客户确认CUSTOMER APPROVED BY		
核准 Approvaled by	审核 Checked by	拟制 Prepared by

供方确认SUPPLIER SIGNATURE		
核准 Approvaled by	审核 Checked by	拟制 Prepared by
Jack		andy

ZX-QT-RD-0011-A1

Add:上海市徐汇区桂箐路69号30栋603室 Tel:021-54266190 Fax:021-54266191

Contents

Item		***Description***		***Page***
1.	·····	Cover	·····	1
2.	·····	Content	·····	2
3.	·····	Specification	·····	3
4.	·····	Drawing	·····	4
5.	·····	Test report	·····	5~10

Specification

1. Electrical Properties :

1.1 Frequency Range……..2400~2500MHz&5150~5850MHz
1.2 Impedance …….. 50Ω
1.3 VSWR …… ≤2.0
1.4 Gain …… 5dBi

2. Physical Properties :

2.1 Cable…… RF 137
2.2 Connector …… RF CONN
2.3 Operating Temp. ……. -20℃ ~ +65℃
2.4 Storage Temp. ……. -30℃ ~ +75℃

上海增信电子有限公司
Signal Plus Technology Co., Ltd.

Antenna Test Report

(G-1425G-A)

Tel:021-54266190 Fax:021-54266191 Web:www.zxsignal.com

1. RF Fixture Experiment

1.1 Test Setup

1.1.1 VNA Test Setup

VSWR and Return Loss measurements (S11) were performed using an KeySight E5071C Network Analyzer. The isolation between antennas is also tested. The testing was performed with apparatus in free space.

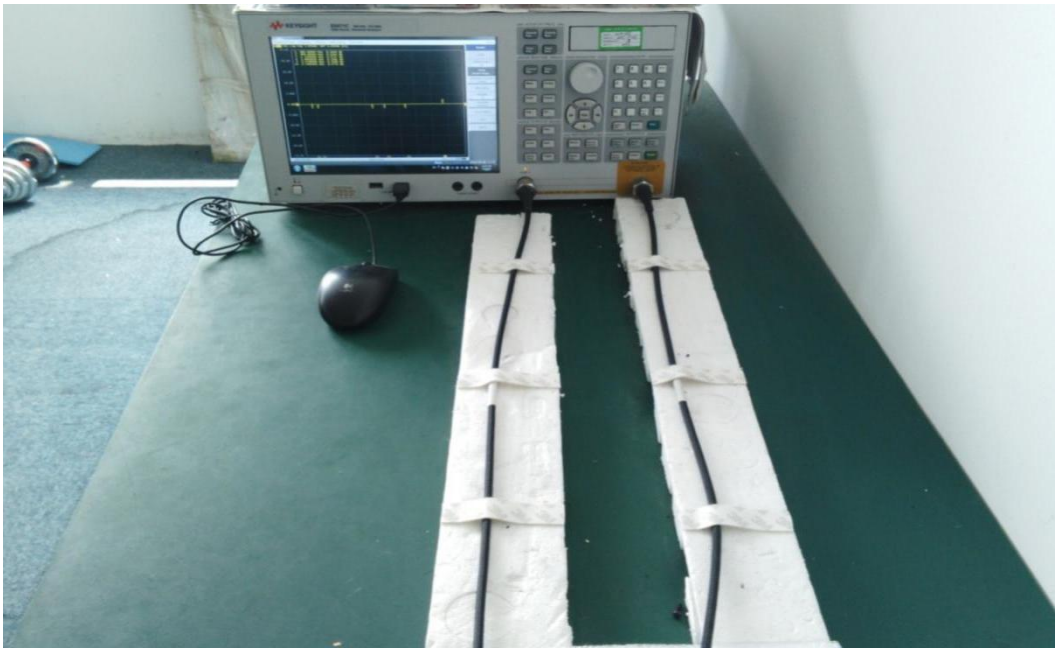

1.1.2 Anechoic Chamber Test Setup

The gain of the antenna was measured in the anechoic chamber.
The chamber provides less than –30 dB reflectivity from 400 MHz through 6 GHz. The chamber size is:7m*4m*3m. The measurement results are calibrated using a leaky wave horn standard. We can measure the antenna gain and efficiency accurately.

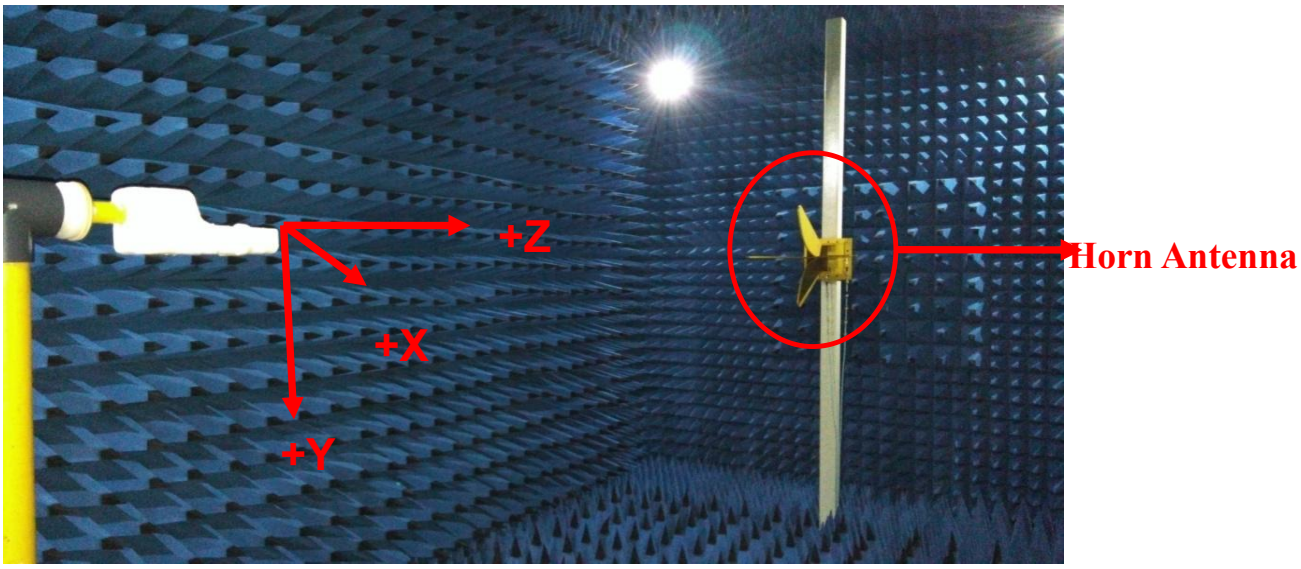

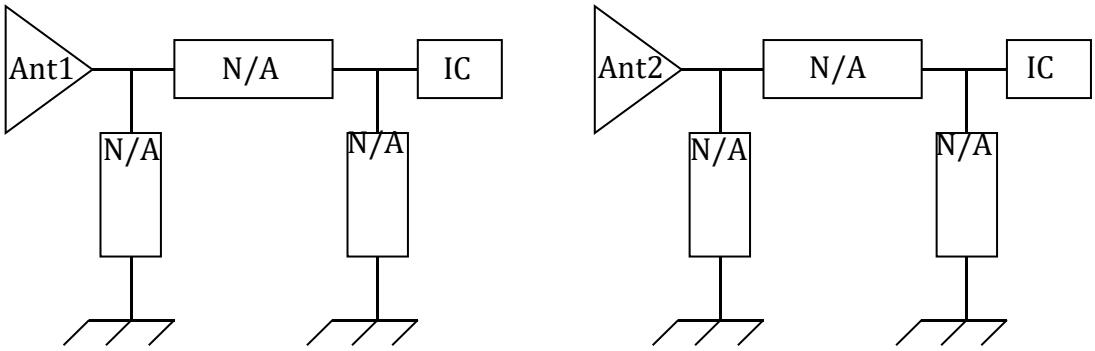

Tel:021-54266190 Fax:021-54266191 Web:www.zxsignal.com

S11(2.4G-Ant)

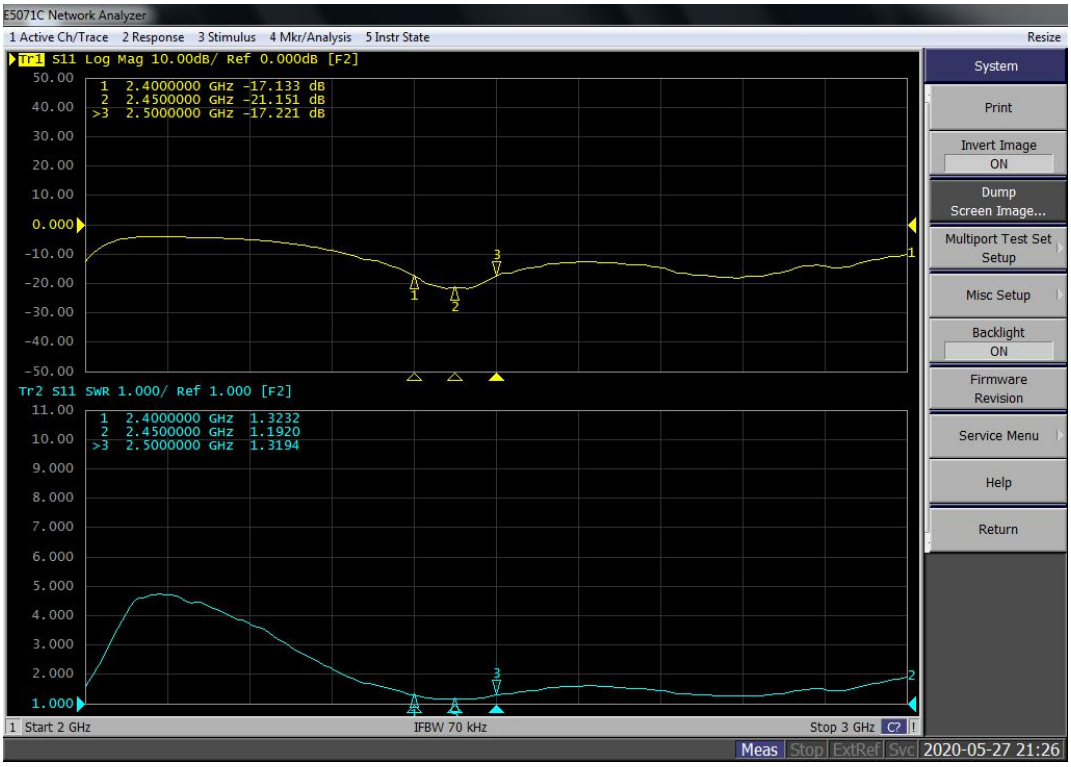

Radiation patterns:3D

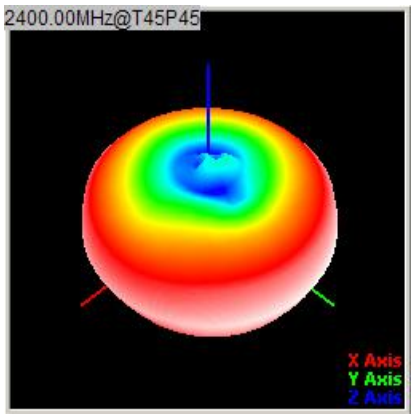

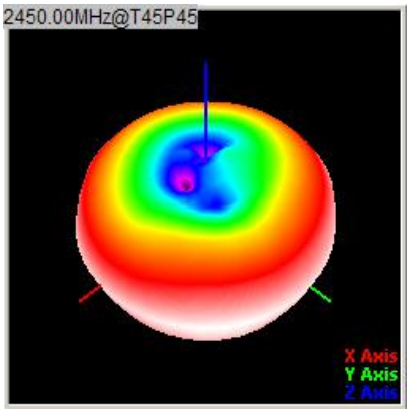

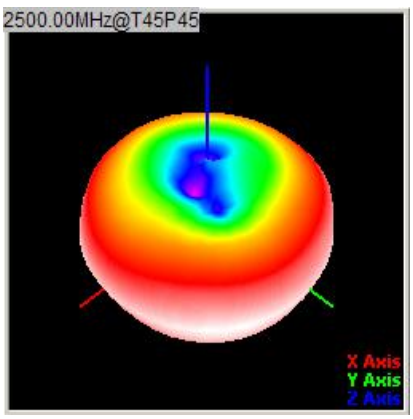

Radiation patterns:2D

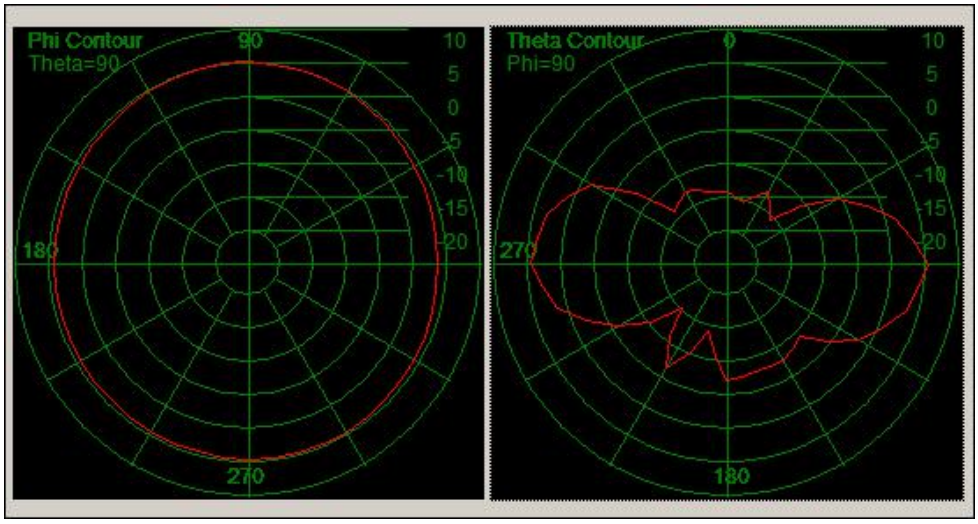

S11(5.8G-Ant)

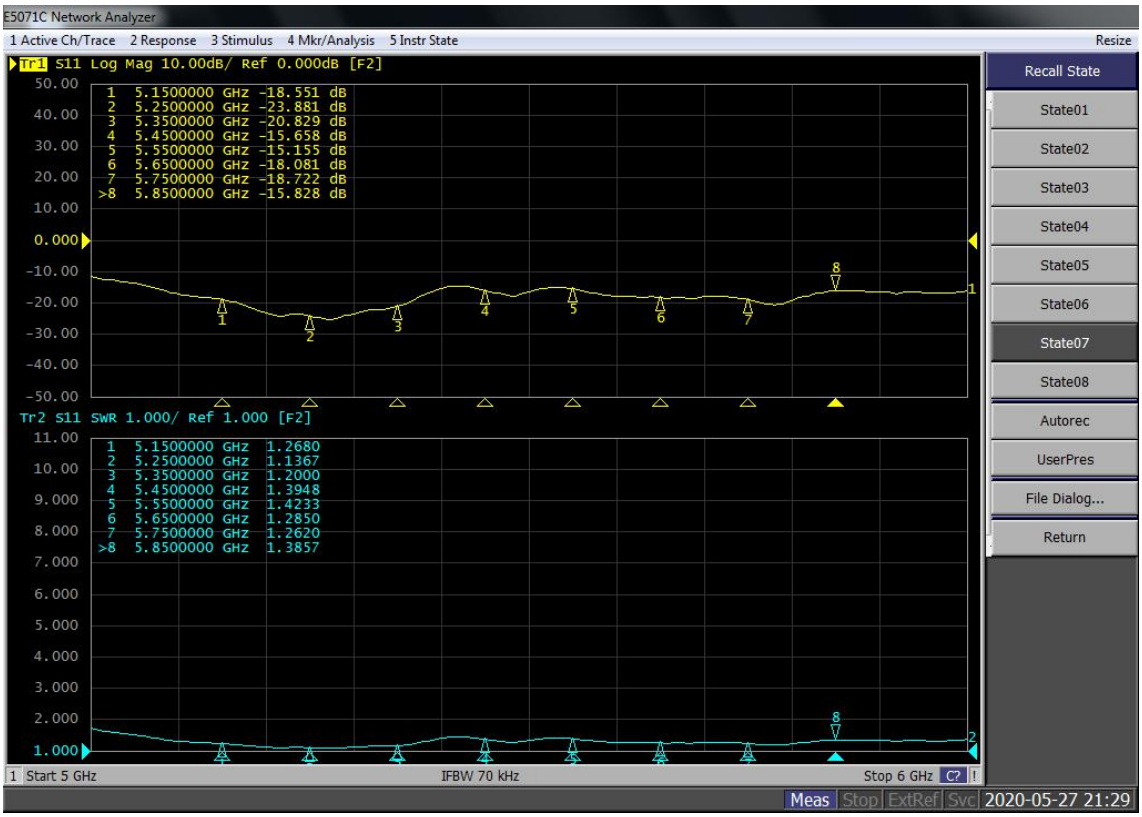

Radiation patterns:3D

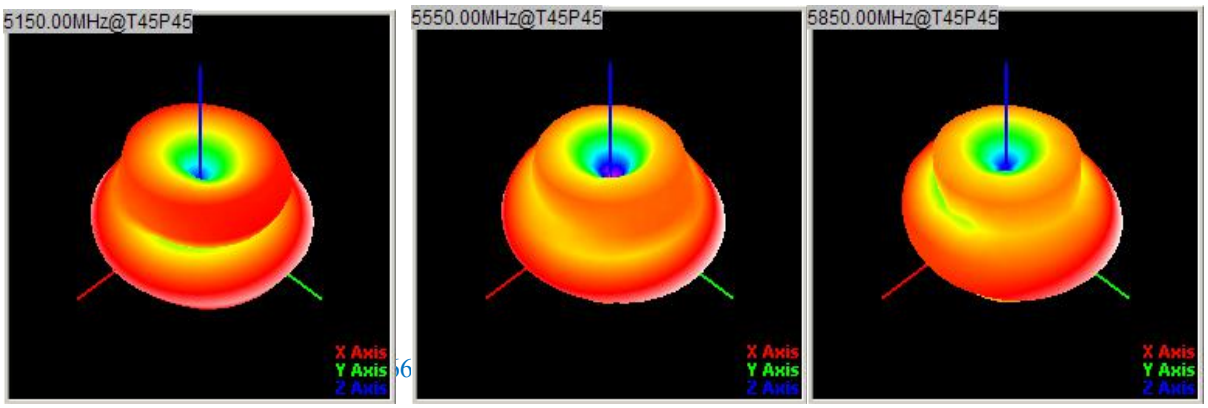

Radiation patterns:2D

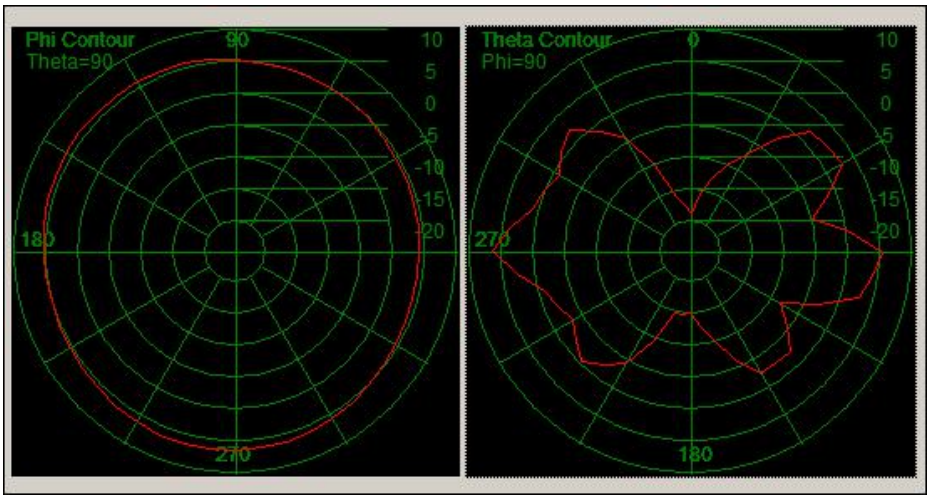

Data Preview

2.4G-Ant:

Freq.(MHz)	2400	2450	2500
VSWR	1.32	1.19	1.32
Gain(dBi)	5.09	5.12	5.04
Eff.%	70.20	72.60	71.50

5.8G-Ant:

Freq.(MHz)	5150	5250	5350	5450	5550	5650	5750	5850
VSWR	1.27	1.14	1.20	1.39	1.42	1.29	1.26	1.39
Gain(dBi)	5.15	5.22	5.30	5.48	5.49	5.38	5.47	5.33
Eff.%	75.60	76.30	81.20	84.50	85.30	85.40	82.60	80.30

S21
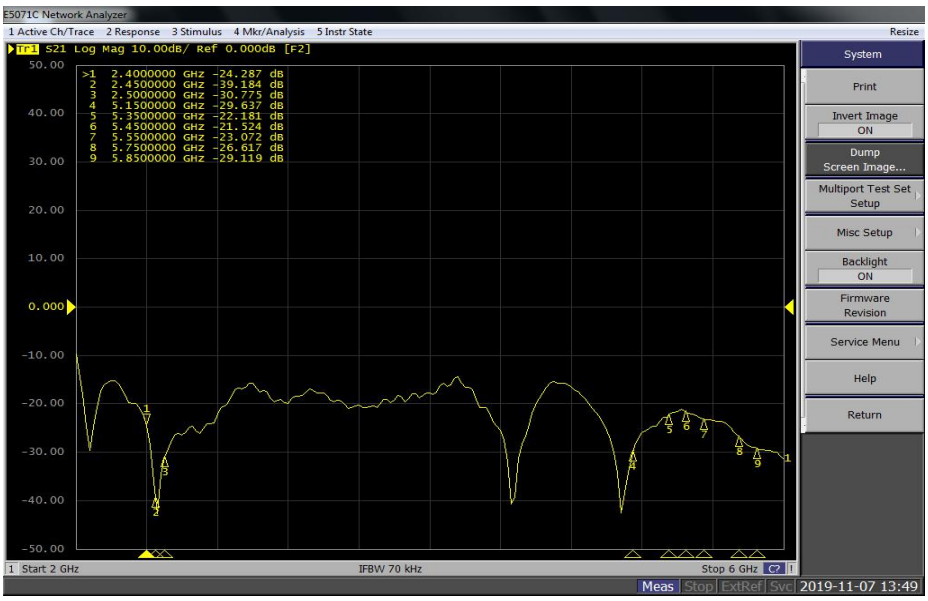
Freq.(MHz)	2400	2450	2500	5150	5350	5450	5550	5750	5850
S21	-25.9	-34.7	-27.6	-47.2	-27.2	-25.6	-26.5	-29.9	-31.7