AUGMENTED REALITY LASER GAME

AGES 8+

CONTENT

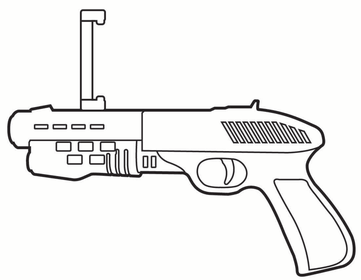

Augmented Reality Blaster

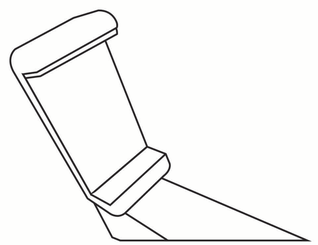

Smartphone Mount

BATTERIES & CHARGING

The blaster uses 2 “AA” 1.5V batteries (not included)

1. Flip open the battery door located at the bottom of the grip.
2. Insert the batteries following the diagram inside the battery compartment.
3. Close the battery compartment.

DOWNLOADING THE APP

1. Scan the correct QR code to the right to download the AR Blaster app from Google Play™ or the The App Store®.
2. Turn on Bluetooth® on your smartphone.

Scan for Android App in Google Play™

Scan for iOS App in The App Store®

Bluetooth® wireless technology

The Bluetooth® word mark and logos are registered trademarks owned by Bluetooth SIG, Inc. Computers, tablets, Smart Phones, and music players must have built-in Bluetooth® wireless technology or 3.5 mm stereo mini plug to connect.

This device complies with Part 15 of the FCC Rules. Operation is subject to the following two conditions: (1) this device may not cause harmful interference, and (2) this device must accept any interference received, including interference that may cause undesired operation.

Note: This equipment has been tested and found to comply with the limits for a Class B digital device, pursuant to part 15 of the FCC Rules. These limits are designed to provide reasonable protection against harmful interference in a residential installation. This equipment generates, uses and can radiate radio frequency energy and, if not installed and used in accordance with the instructions, may cause harmful interference to radio communications.

However, there is no guarantee that interference will not occur in a particular installation. If this equipment does cause harmful interference to radio or television reception, which can be determined by turning the equipment off and on, the user is encouraged to try to correct the interference by one or more of the following measures:

—Reorient or relocate the receiving antenna.

—Increase the separation between the equipment and receiver.

—Connect the equipment into an outlet on a circuit different from that to which the receiver is connected.

—Consult the dealer or an experienced radio/TV technician for help.

⚠ SAFETY WARNINGS: PLEASE READ BEFORE USE

- Not intended for children under 8 years of age.
- Use this product only for its intended use.
- Always be aware of your surrounding while using this item
- Do not expose to extreme temperatures and moisture
- Do not leave game unattended when not in use.
- This game has no user serviceable components. Do not disassemble.
- Thoroughly inspect products before every use. If the product appears worn, frayed/splintered, cracked, or broken in any manner, discontinue use and discard immediately.

BATTERY WARNING:

- Do not mix old and new batteries.
- Do not mix alkaline, standard (carbon-zinc), or rechargeable batteries.
- Alkaline batteries are recommended. Use only the specified voltage.
- Insert batteries using the correct polarity. Always use, replace, and recharge (if applicable) batteries under adult supervision.
- Do not charge with non-rechargeable batteries.
- Do not short-circuit the battery supply terminals.
- Do not dispose of batteries in a fire, batteries may explode or leak.
- Remove batteries before storing.
- Recycle or dispose of batteries according to federal, state, and local laws

Distributed by and © 2018 MerchSource, LLC. Irvine, CA 92618. All rights reserved.

For technical support, please call 1-800-374-2744.

Model：1008905

Printed in China

KEEP THIS INSTRUCTION MANUAL AS IT CONTAINS IMPORTANT INFORMATION FOR FUTURE REFERENCE.

Due to continuous product improvements, the pictures on this manual may differ slightly from the actual product.

AUGMENTED REALITY LASER GAME

AGES 8+

ASSEMBLY

- Insert the threaded end of the smartphone mount into the mounting hole on the top of the blaster’s barrel.
- Rotate the smartphone mount clockwise until it is firmly attached. The open end of the mount should face backward towards the user.
- Lift the top end of the spring-loaded mount and insert the phone. Be careful not to trap any buttons. You may need to remove any protective case.

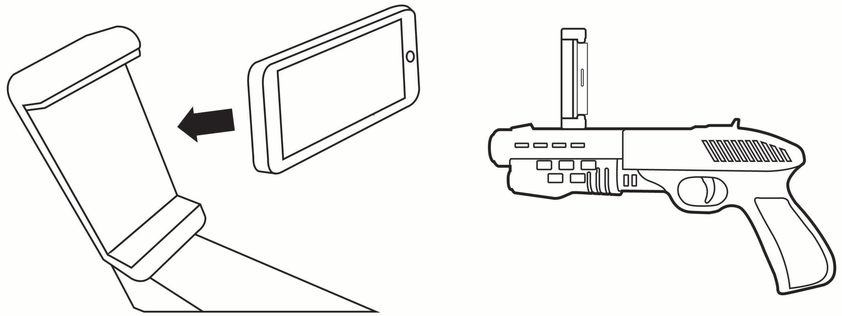

CONNECTING WITH THE BLASTER

The blaster connects with the smartphone via Bluetooth®. Make sure that Bluetooth® is enabled on your device.

1. Launch the AR Blaster app.
2. Pull and hold the AR Blaster’s trigger for approximately 3 seconds.
3. The app will search for the Blaster.
   a. If it doesn’t find the Blaster, tap on the Blaster icon at the bottom of the screen.
   b. A list of available connections will appear.
   c. Move the slider to the right of the Blaster’s name to the right.

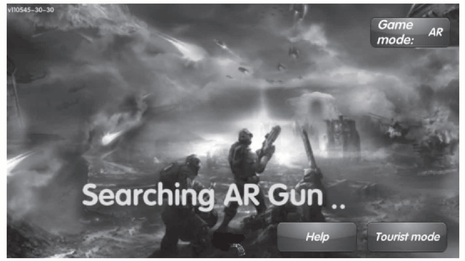

Note:

- When in the app’s main menu, you may notice ARGUNPRO, ARCS, WORLDSAR, and ARCHER app links. These apps may not be playable at the time of use.

WARNING: Imitation gun may be mistaken for a firearm by local, state, or federal law enforcement. Altering the imitation gun in any way so as to make it appear dangerous or like a real firearm is prohibited. Using the imitation gun for any prohibited activities - such as displaying, exhibiting, brandishing, or otherwise employing the imitation gun in a threatening manner – is illegal and may result in criminal penalties, including in some jurisdictions imprisonment for up to one year and/or a fine of $3,000. Compliance with local, state, and federal laws is strictly required.

WARNING: Changes or modifications not expressly approved by the party responsible for compliance could void the user’s authority to operate the equipment.