FCC Test Report

Report No.: AGC00069150808FE07

FCC ID	:	2AE56A6
APPLICATION PURPOSE	:	Original Equipment
PRODUCT DESIGNATION	:	Smart Phone
BRAND NAME	:	KENXINDA
MODEL NAME	:	A6
CLIENT	:	KENXINDA TECHNOLOGY CO., LIMITED
DATE OF ISSUE	:	Sept.02, 2015
STANDARD(S)	:	FCC Part 15 Rules
REPORT VERSION	:	V1.0

Attestation of Global Compliance (Shenzhen) Co., Ltd

CAUTION:
This report shall not be reproduced except in full without the written permission of the test laboratory and shall not be quoted out of context.

Report Revise Record

Report Version	Revise Time	Issued Date	Valid Version	Notes
V1.0	/	Sept.02, 2015	Valid	Original Report

TABLE OF CONTENTS

1. VERIFICATION OF CONFORMITY 4
2. SYSTEM DESCRIPTION 5
3. MEASUREMENT UNCERTAINTY 5
4. PRODUCT INFORMATION 6
5. SUPPORT EQUIPMENT 7
6. TEST FACILITY 8
7. FCCLINE CONDUCTED EMISSION TEST 10
7.1. LIMITS OF LINE CONDUCTED EMISSION TEST 10
7.2. BLOCK DIAGRAM OF TEST SETUP 10
7.3. PROCEDURE OF LINE CONDUCTED EMISSION TEST 11
7.4. TEST RESULT OF LINE CONDUCTED EMISSION TEST 12
8. FCC RADIATED EMISSION TEST 14
8.1. LIMITS OF RADIATED EMISSION TEST 14
8.2. BLOCK DIAGRAM OF TEST SETUP 14
8.3. PROCEDURE OF RADIATED EMISSION TEST 15
8.4. TEST RESULT OF RADIATED EMISSION TEST 16
APPENDIX A: PHOTOGRAPHS OF TEST SETUP 18
APPENDIX B: PHOTOGRAPHS OF EUT 20

1. VERIFICATION OF CONFORMITY

Applicant	KENXINDA TECHNOLOGY CO., LIMITED
Address	UNIT B 13/F PRAT COMMERCIAL BUILDING 17-19 PRAT AVENUE TSIMSHATSUI KL HONGKONG
Manufacturer	SHENZHEN KENXINDA TECHNOLOGY CO., LTD. (BAO'AN BRANCH)
Address	1-6 Floor, No.105 Work Shop & 1-5 Floor, No.104 Work Shop, Xinweihuaning Road, Dalang Community, Dalang Street, Baoán District, Shenzhen, P.R.C
Product Designation	Smart Phone
Brand Name	KENXINDA
Test Model	A6
Measurement Procedure	ANSI C63.4: 2009
Date of test	Aug.27, 2015 to Aug.29, 2015
Deviation	None
Condition of Test Sample	Normal
Report Template	AGCRT-US-IT/AC

The above equipment was tested by Dongguan Precise Testing Service Co., Ltd. for compliance with the requirements set forth in the FCC Rules and Regulations Part 15, the measurement procedure according to ANSI C63.4:2009. This said equipment in the configuration described in this report shows the maximum emission levels emanating from equipment are within the compliance requirements.

The test results of this report relate only to the tested sample identified in this report.

Tested By	Matt Zhang	
	Matt Zhang(Zhang Liang)	Sept.02, 2015
Reviewed By	Bart Xie	
	Bart Xie(Xie Xiaobin)	Sept.02, 2015
Approved By	Solger Zhang	
	Solger Zhang(Zhang Hongyi) Authorized Officer	Sept.02, 2015

2. SYSTEM DESCRIPTION

EUT test procedure:

1. Connect EUT and peripheral devices (PC) through USB port.
2. Power on the EUT, use the software to transfer data between EUT and PC.
3. Make sure the EUT operates normally during the test.

Test Mode

TEST MODE DESCRIPTION		
NO.	**TEST MODE DESCRIPTION**	**WORST**
1	USB (connection for data transferring)	V
Note: 1.V means EMI worst mode 2 .Other modes have been verified through VOC mode. 3. USB cable is provided by AGC-Lab.		

3. MEASUREMENT UNCERTAINTY

The uncertainty is calculated using the methods suggested in the “Guide to the Expression of Uncertainty in Measurement” (GUM) published by ISO.

Conducted measurement: +/- 2.75dB

Radiated measurement: +/- 3.2Db

Summary Of Test Results

FCC Rules	Description Of Test	Result
§15.107	Conduction Emission	Compliant
§15.109	Radiated Emission	Compliant

4. PRODUCT INFORMATION

Housing Type	plastics
Adapter Input	AC100-240V, 50-60Hz, 100mA
Adapter Output	DC5V, 1000mA

I/O Port Information (☒Applicable ☐Not Applicable)

I/O Port of EUT			
I/O Port Type	**Q'TY**	**Cable**	**Tested with**
USB Port	1	N/A	N/A
Earphone Port	1	1.0 m, unshielded	1

5. SUPPORT EQUIPMENT

Device Type	Manufacturer	Model Name	Serial No.	Data Cable	Power Cable
Notebook	Lenovo	B460	WB03928113	1	1.5m unshielded

Note: All the above equipment/cables were placed in worse case positions to maximize emission signals during emission test.

6. TEST FACILITY

Site	Dongguan Precise Testing Service Co., Ltd.
Location	Building D, Baoding Technology Park, Guangming Road2,Dongcheng District, Dongguan, Guangdong, China,
FCC Registration No.	371540
Description	The test site is constructed and calibrated to meet the FCC requirements in documents ANSI C63.4:2009.

ALL TEST EQUIPMENT LIST

FOR RADIATED EMISSION TEST (BELOW 1GHZ)

Radiated Emission Test Site					
Name of Equipment	**Manufacturer**	**Model Number**	**Serial Number**	**Last Calibration**	**Due Calibration**
EMI Test Receiver	Rohde & Schwarz	ESCI	101417	July 4, 2015	July 3, 2016
Trilog Broadband Antenna (25M-1GHz)	SCHWARZBECK	VULB9160	9160-3355	July 4, 2015	July 3, 2016
Signal Amplifier	SCHWARZBECK	BBV 9475	9745-0013	July 4, 2015	July 3, 2016
RF Cable	SCHWARZBECK	AK9515E	96221	July 4, 2015	July 3, 2016
3m Anechoic Chamber	CHENGYU	966	PTS-001	June 6, 2015	June 5, 2016
MULTI-DEVICE Positioning Controller	Max-Full	MF-7802	MF780208339	N/A	N/A
Active loop antenna (9K-30MHz)	Schwarzbeck	FMZB1519	1519-038	June 6, 2015	June 5, 2016
Spectrum analyzer	Agilent	E4407B	MY46185649	June 6, 2015	June 5, 2016

FOR RADIATED EMISSION TEST (1GHZ ABOVE)

Radiated Emission Test Site					
Name of Equipment	**Manufacturer**	**Model Number**	**Serial Number**	**Last Calibration**	**Due Calibration**
EMI Test Receiver	Rohde & Schwarz	ESCI	101417	July 4, 2015	July 3, 2016
Horn Antenna (1G-18GHz)	SCHWARZBECK	BBHA9120D	9120D-1246	July 11, 2015	July 10, 2016
Spectrum Analyzer	Agilent	E4411B	MY4511453	July 4, 2015	July 3, 2016
Signal Amplifier	SCHWARZBECK	BBV 9718	9718-269	July 7, 2015	July 6, 2016
RF Cable	SCHWARZBECK	AK9515H	96220	July 8, 2015	July 7, 2016
3m Anechoic Chamber	CHENGYU	966	PTS-001	June 6, 2015	June 5, 2016

MULTI-DEVICE Positioning Controller	Max-Full	MF-7802	MF780208339	N/A	N/A
Horn Ant (18G-40GHz)	Schwarzbeck	BBHA 9170	9170-181	June 6, 2015	June 5, 2016

Conducted Emission Test Site					
Name of Equipment	**Manufacturer**	**Model Number**	**Serial Number**	**Last Calibration**	**Due Calibration**
EMI Test Receiver	Rohde & Schwarz	ESCI	101417	July 4, 2015	July 3, 2016
Artificial Mains Network	Narda	L2-16B	000WX31025	July 8, 2015	July 7, 2016
Artificial Mains Network (AUX)	Narda	L2-16B	000WX31026	July 8, 2015	July 7, 2016
RF Cable	SCHWARZBECK	AK9515E	96222	July 4, 2015	July 3, 2016
Shielded Room	CHENGYU	843	PTS-002	June 6,2015	June 5,2016

7. FCCLINE CONDUCTED EMISSION TEST

7.1. LIMITS OF LINE CONDUCTED EMISSION TEST

Frequency	Maximum RF Line Voltage	
	Q.P.(dBuV)	Average(dBuV)
150kHz-500kHz	66-56	56-46
500kHz-5MHz	56	46
5MHz-30MHz	60	50

Note:
1. The lower limit shall apply at the transition frequency.
2. The limit decreases linearly with the logarithm of the frequency in the range 0.15 MHz to 0.50MHz.

7.2. BLOCK DIAGRAM OF TEST SETUP

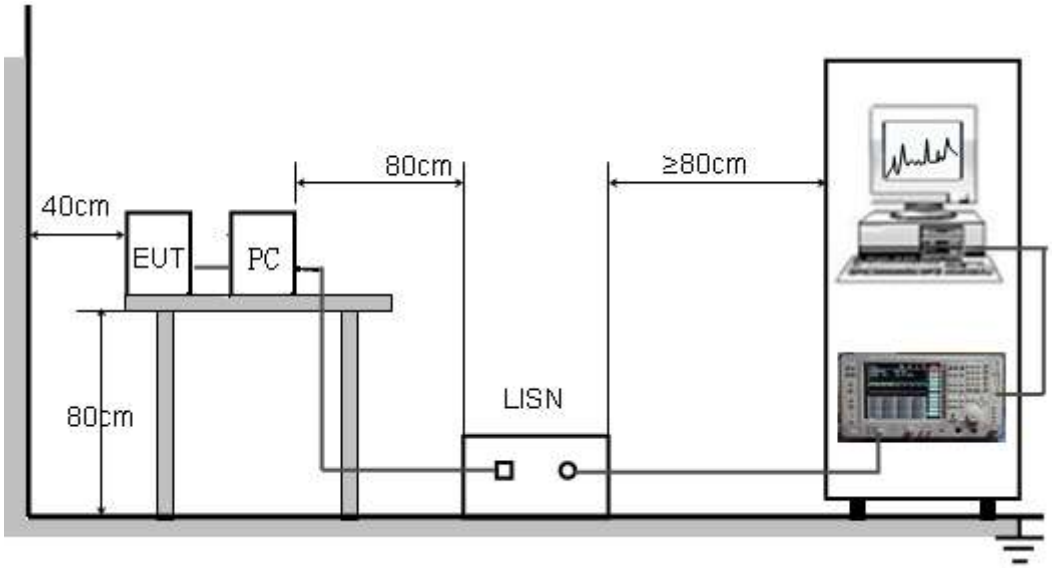

7.3. PROCEDURE OF LINE CONDUCTED EMISSION TEST

(1) The equipment was set up as per the test configuration to simulate typical actual usage per the user's manual. When the EUT is a tabletop system, a wooden table with a height of 0.8 meters is used and is placed on the ground plane as per ANSI C63.4 (see Test Facility for the dimensions of the ground plane used). When the EUT is a floor-standing equipment, it is placed on the ground plane which has a 3-12 mm non-conductive covering to insulate the EUT from the ground plane.

(2) Support equipment, if needed, was placed as per ANSI C63.4.

(3) All I/O cables were positioned to simulate typical actual usage as per ANSI C63.4.

(4) The EUT received DC5V power from PC with receive AC120V/60Hz power from a LISN.

(5) The EUT test program was started. Emissions were measured on each current carrying line of the EUT using a spectrum Analyzer / Receiver connected to the LISN powering the EUT. The LISN has two monitoring points: Line 1 (Hot Side) and Line 2 (Neutral Side). Two scans were taken: one with Line 1 connected to Analyzer / Receiver and Line 2 connected to a 50 ohm load; the second scan had Line 1 connected to a 50 ohm load and Line 2 connected to the Analyzer / Receiver.

(6) Analyzer / Receiver scanned from 150 kHz to 30MHz for emissions in each of the test modes.

(7) During the above scans, the emissions were maximized by cable manipulation.

(8) A scan was taken on both power lines, Line 1 and Line 2, recording at least the six highest emissions.

(9) Emission frequency and amplitude were recorded into a computer in which correction factors were used to calculate the emission level and compare reading to the applicable limit. If EUT emission level was less –2dB to the A.V. limit in Peak mode, then the emission signal was re-checked using Q.P and Average detector.

The test data of the worst case condition (mode 1) was reported on the Summary Data page.

7.4. TEST RESULT OF LINE CONDUCTED EMISSION TEST

LINE CONDUCTED EMISSION TEST-L

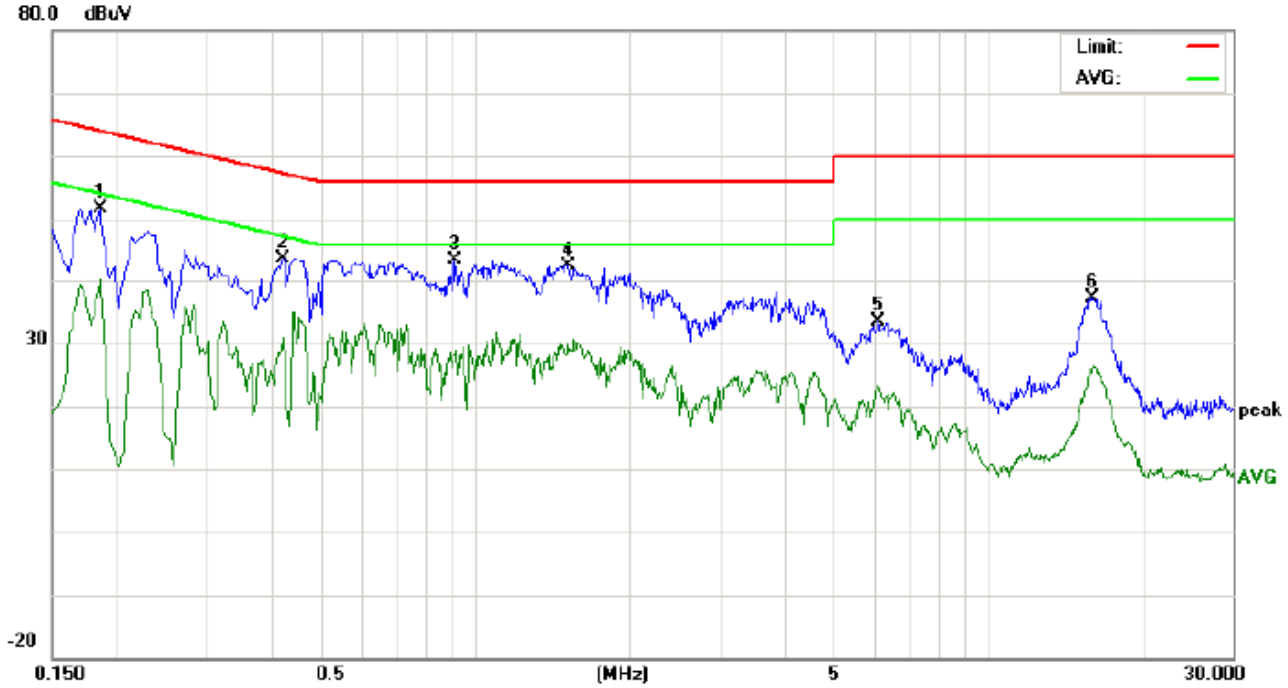

Site: Conduction | Phase: *L1* | Temperature: 23.2
Limit: FCC Class B Conduction(QP) | Power: AC 120V/60Hz | Humidity: 56.5 %
EUT: Smart Phone
M/N: A6
Mode: USB
Note:

No.	Freq. (MHz)	Reading_Level (dBuV)			Correct Factor	Measurement (dBuV)			Limit (dBuV)		Margin (dB)		P/F	Comment
		Peak	QP	AVG	dB	Peak	QP	AVG	QP	AVG	QP	AVG		
1	0.1860	41.50		29.95	10.20	51.70		40.15	64.21	54.21	-12.51	-14.06	P	
2	0.4220	33.35		20.61	10.35	43.70		30.96	57.41	47.41	-13.71	-16.45	P	
3	0.9100	32.95		17.99	10.41	43.36		28.40	56.00	46.00	-12.64	-17.60	P	
4	1.5260	32.03		19.54	10.37	42.40		29.91	56.00	46.00	-13.60	-16.09	P	
5	6.1020	23.08		12.98	10.28	33.36		23.26	60.00	50.00	-26.64	-26.74	P	
6	15.9620	27.09		15.44	10.11	37.20		25.55	60.00	50.00	-22.80	-24.45	P	

RESULT: PASS

LINE CONDUCTED EMISSION TEST-N

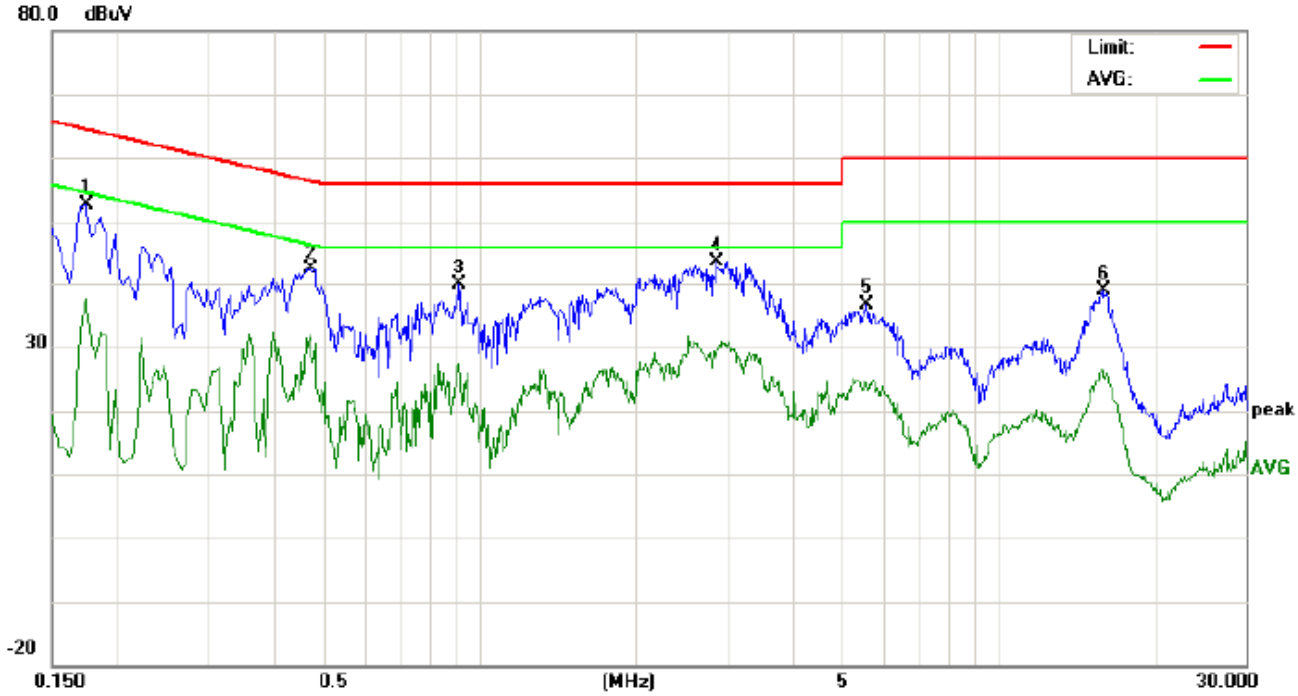

Site: Conduction
Phase: *N*
Temperature: 23.2
Limit: FCC Class B Conduction(QP)
Power: AC 120V/60Hz
Humidity: 56.5 %
EUT: Smart Phone
M/N: A6
Mode: USB
Note:

No.	Freq. (MHz)	Reading_Level (dBuV)			Correct Factor	Measurement (dBuV)			Limit (dBuV)		Margin (dB)		P/F	Comment
		Peak	QP	AVG	dB	Peak	QP	AVG	QP	AVG	QP	AVG		
1	0.1740	42.47		27.53	10.19	52.66		37.72	64.76	54.76	-12.10	-17.04	P	
2	0.4740	31.89		18.97	10.38	42.27		29.35	56.44	46.44	-14.17	-17.09	P	
3	0.9140	29.45		16.91	10.40	39.85		27.31	56.00	46.00	-16.15	-18.69	P	
4	2.8620	33.22		17.92	10.52	43.74		28.44	56.00	46.00	-12.26	-17.56	P	
5	5.5780	26.27		14.11	10.25	36.52		24.36	60.00	50.00	-23.48	-25.64	P	
6	15.9220	28.78		16.28	10.11	38.89		26.39	60.00	50.00	-21.11	-23.61	P	

RESULT: PASS

8. FCC RADIATED EMISSION TEST

8.1. LIMITS OF RADIATED EMISSION TEST

Frequency (MHz)	Distance (m)	Maximum Field Strength Limit (dBuV/m/ Q.P.)
30~88	3	40.0
88~216	3	43.5
216~960	3	46.0
Above 960	3	54.0

Note: The lower limit shall apply at the transition frequency.

8.2. BLOCK DIAGRAM OF TEST SETUP

System Diagram of Connections between EUT and Simulators

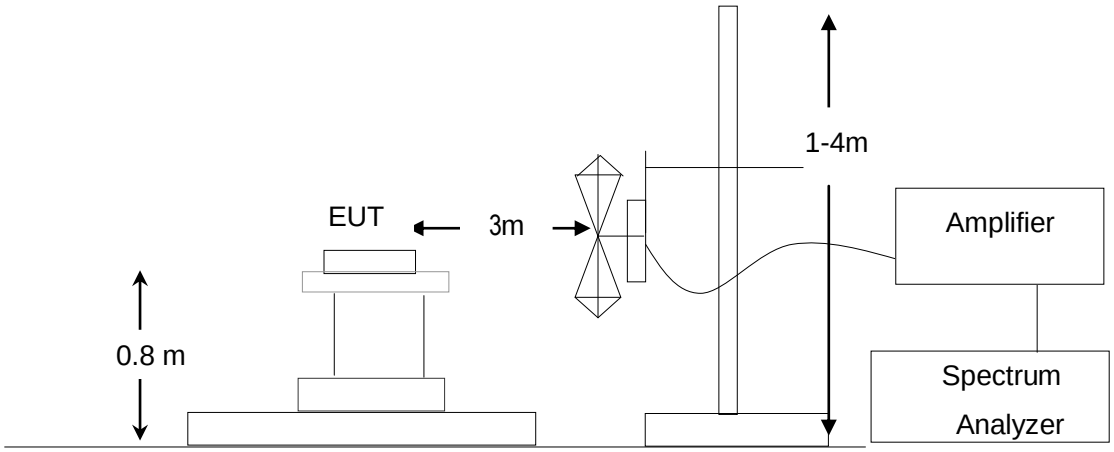

8.3. PROCEDURE OF RADIATED EMISSION TEST

(1) The equipment was set up as per the test configuration to simulate typical actual usage per the user's manual. When the EUT is a tabletop system, a wooden turntable with a height of 0.8 meters is used which is placed on the ground plane as per ANSI C63.4 (see Test Facility for the dimensions of the ground plane used). When the EUT is floor-standing equipment, it is placed on the ground plane which has a 3-12 mm non-conductive covering to insulate the EUT from the ground plane.

(2) Support equipment, if needed, was placed as per ANSI C63.4.

(3) All I/O cables were positioned to simulate typical actual usage as per ANSI C63.4.

(4) The EUT received DC 5V power from PC with receive AC120V/60Hz power from socket under the turntable through a LISN.

(5) The antenna was placed at 3 meter away from the EUT as stated in FCC Part 15. The antenna connected to the Analyzer via a cable and at times a pre-amplifier would be used.

(6) The Analyzer / Receiver quickly scanned from 30MHz to 1000MHz. The EUT test program was started. Emissions were scanned and measured rotating the EUT to 360 degrees and positioning the antenna 1 to 4 meters above the ground plane, in both the vertical and the horizontal polarization, to maximize the emission reading level.

(7) The test mode(s) were scanned during the test:

(8) Recorded at least the six highest emissions. Emission frequency, amplitude, antenna position,polarization and turntable position were recorded into a computer in which correction factors were used to calculate the emission level and compare reading to the applicable limit and Q.P./Peak reading is presented.

The test data of the worst case condition (mode 1) was reported on the Summary Data page.

8.4. TEST RESULT OF RADIATED EMISSION TEST

Radiated Emission Test at 3m Distance-Horizontal

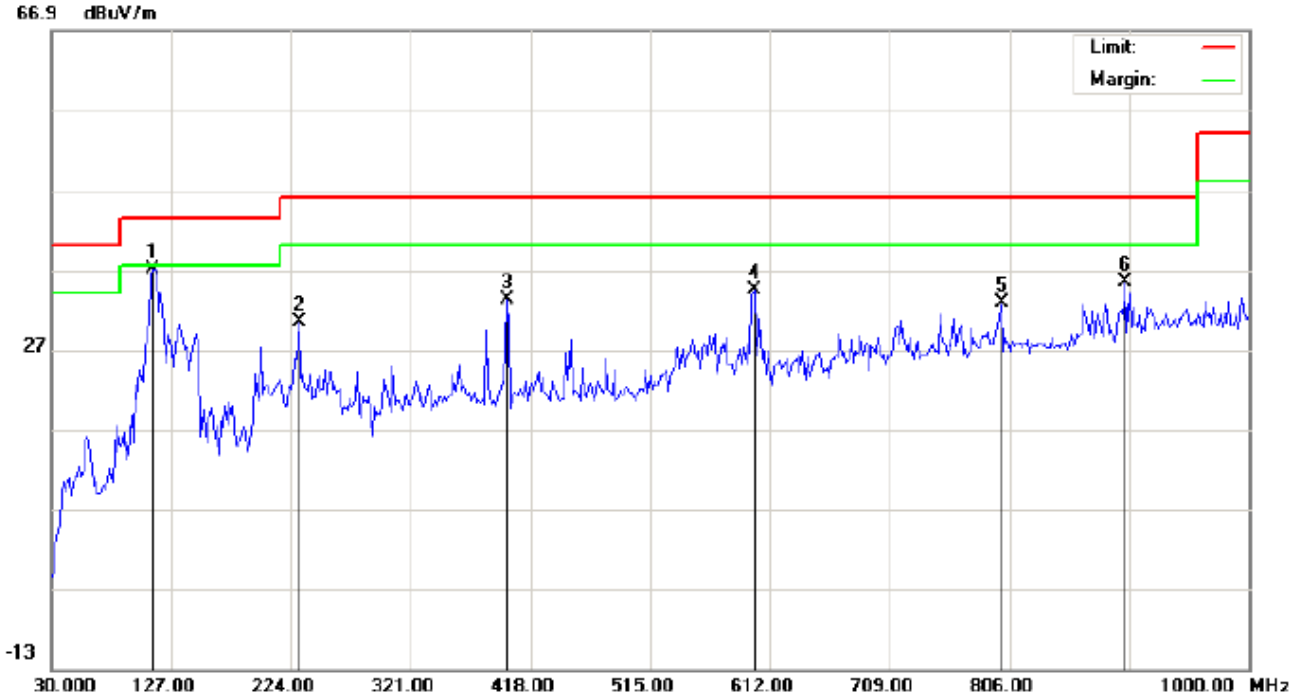

Site: site #1
Limit: FCC Class B 3M Radiation
EUT: Smart Phone
M/N: A6
Mode: USB
Note:

Polarization: *Horizontal*
Power: AC 120V/60Hz
Distance: 3m

Temperature: 22.7
Humidity: 55.6 %

No.	Mk.	Freq.	Reading	Factor	Measurement	Limit	Over	Detector	Antenna Height	Table Degree	Comment
		MHz	dBuV	dB/m	dBuV/m	dBuV/m	dB		cm	degree	
1	*	112.4500	25.74	11.34	37.08	43.50	-6.42	peak			
2		230.4667	17.26	13.16	30.42	46.00	-15.58	peak			
3		398.6000	14.05	19.06	33.11	46.00	-12.89	peak			
4		599.0667	10.64	23.71	34.35	46.00	-11.65	peak			
5		799.5333	5.54	27.31	32.85	46.00	-13.15	peak			
6		899.7667	6.90	28.60	35.50	46.00	-10.50	peak			

RESULT: PASS

Radiated Emission Test at 3m Distance-Vertical

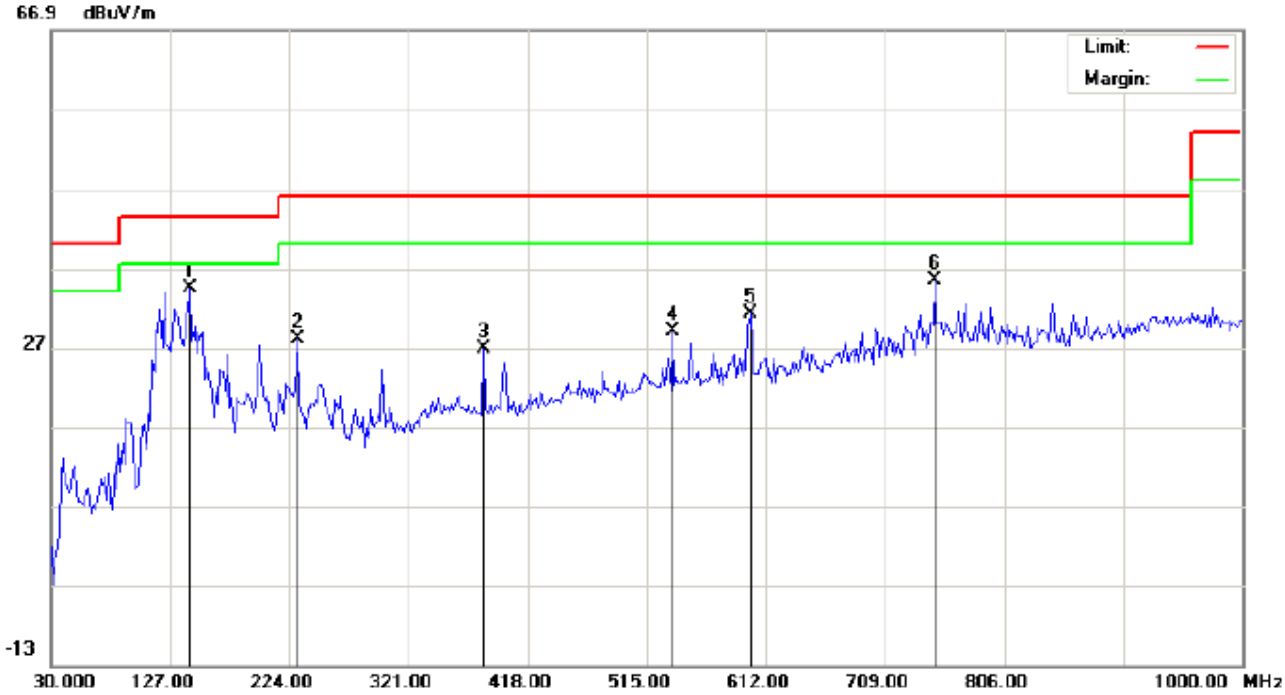

Site: site #1
Limit: FCC Class B 3M Radiation
EUT: Smart Phone
M/N: A6
Mode: USB
Note:

Polarization: *Vertical*
Power: AC 120V/60Hz
Distance: 3m

Temperature: 22.7
Humidity: 55.6 %

No.	Mk.	Freq.	Reading	Factor	Measurement	Limit	Over	Detector	Antenna Height	Table Degree	Comment
		MHz	dBuV	dB/m	dBuV/m	dBuV/m	dB		cm	degree	
1	*	143.1667	19.13	15.22	34.35	43.50	-9.15	peak			
2		230.4667	16.02	11.99	28.01	46.00	-17.99	peak			
3		382.4333	7.94	18.95	26.89	46.00	-19.11	peak			
4		536.0167	6.91	22.10	29.01	46.00	-16.99	peak			
5		599.0667	8.56	22.73	31.29	46.00	-14.71	peak			
6		749.4167	8.72	26.61	35.33	46.00	-10.67	peak			

RESULT: PASS

Note: All Other modes above 1GHz have more than 20db margin, no recording in the report

Measurement = Reading + Factor, Over = Measurement – Limit.

APPENDIX A: PHOTOGRAPHS OF TEST SETUP

FCC LINE CONDUCTED EMISSION TEST SETUP

FCC RADIATED EMISSION TEST SETUP

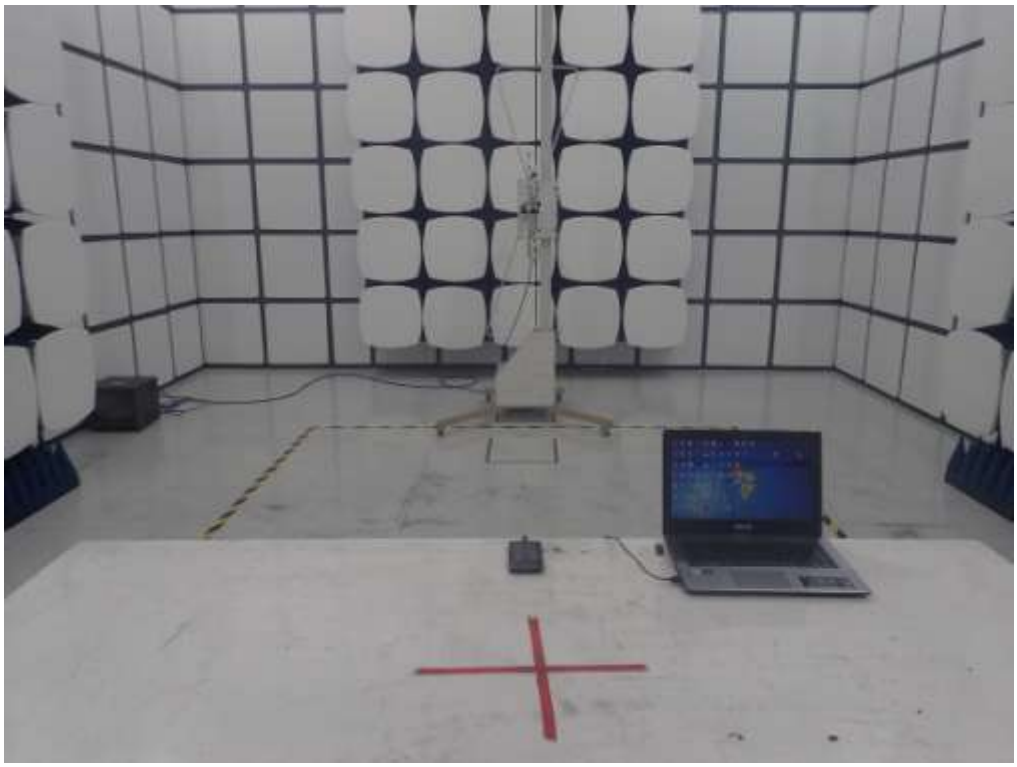

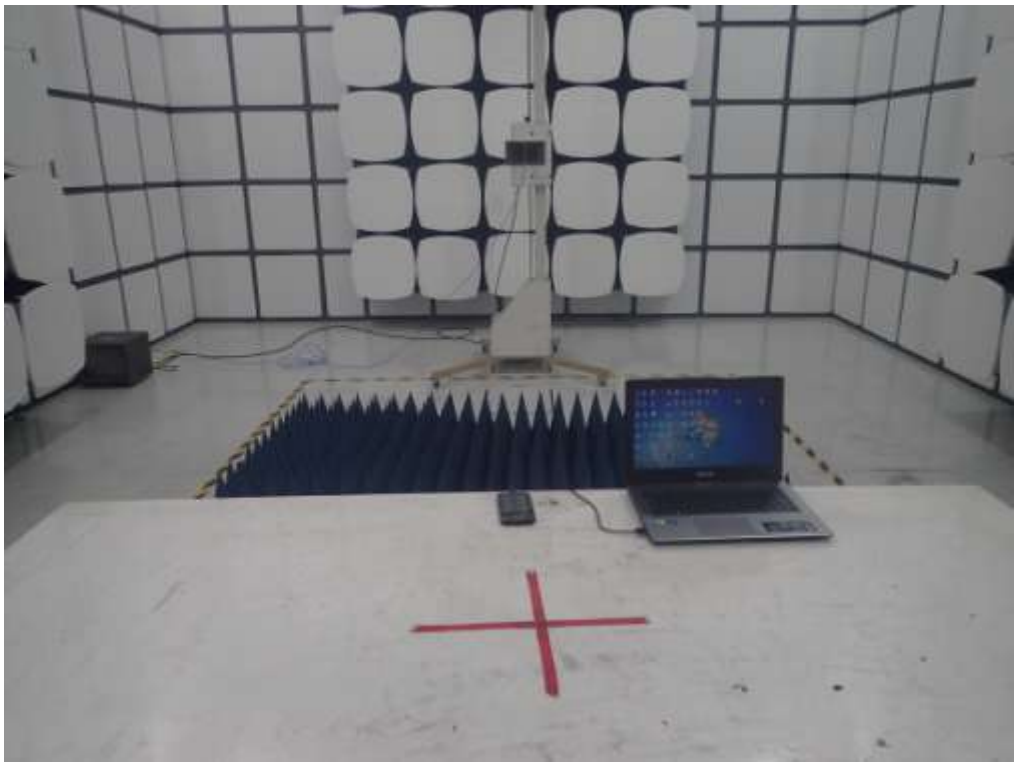

APPENDIX B: PHOTOGRAPHS OF EUT

TOTAL VIEW OF EUT

TOP VIEW OF EUT

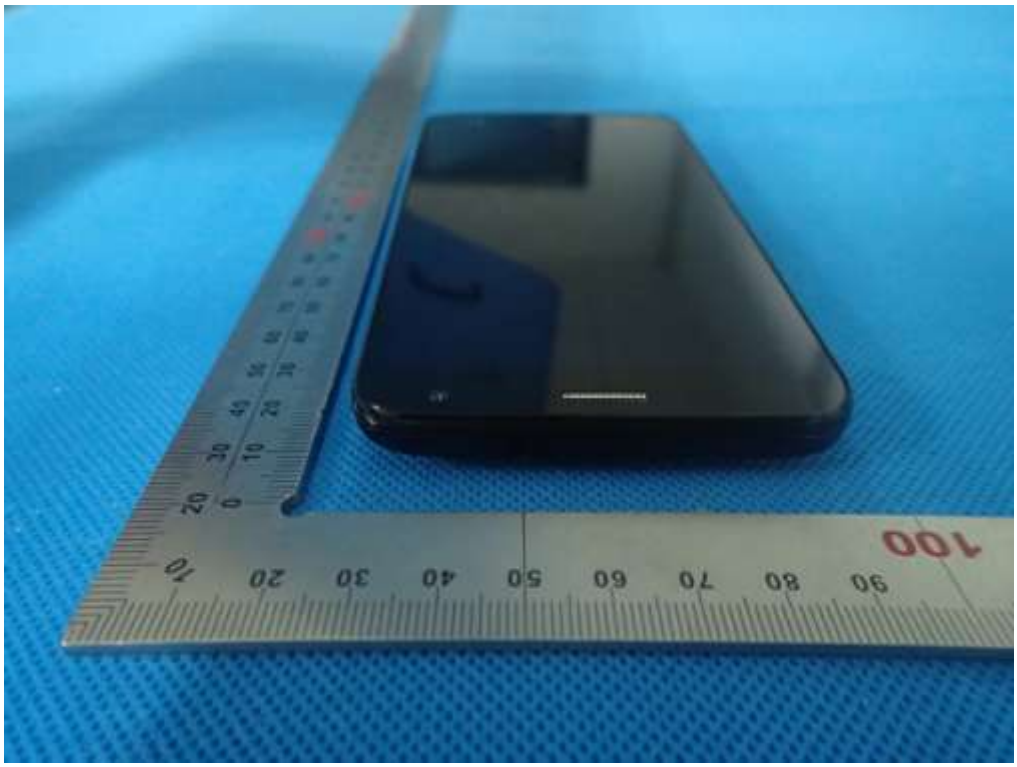

BOTTOM VIEW OF EUT

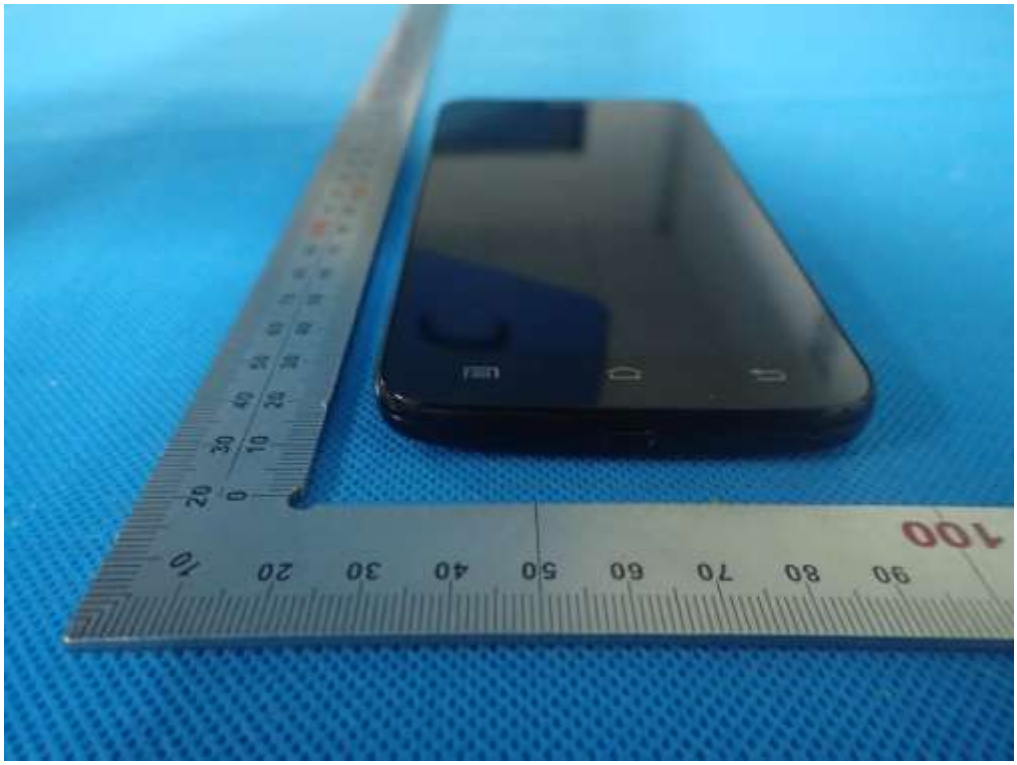

FRONT VIEW OF EUT

BACK VIEW OF EUT

LEFT VIEW OF EUT

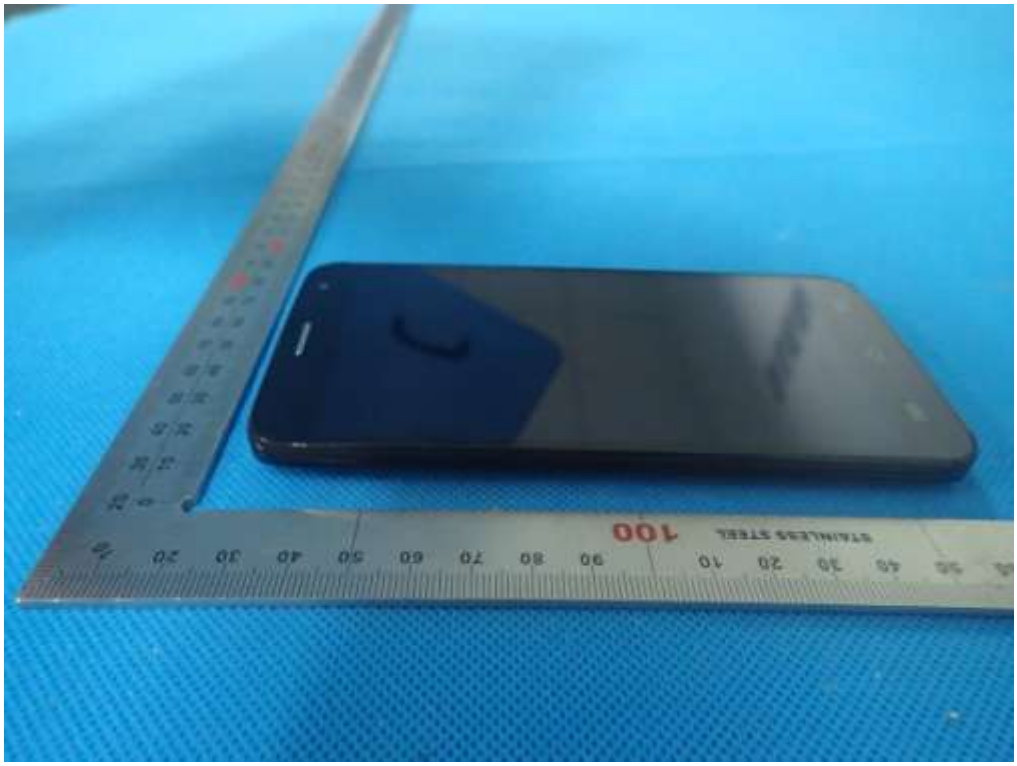

RIGHT VIEW OF EUT

OPEN VIEW OF EUT-1

OPEN VIEW OF EUT-2

OPEN VIEW OF EUT-3

INTERNAL VIEW OF EUT-1

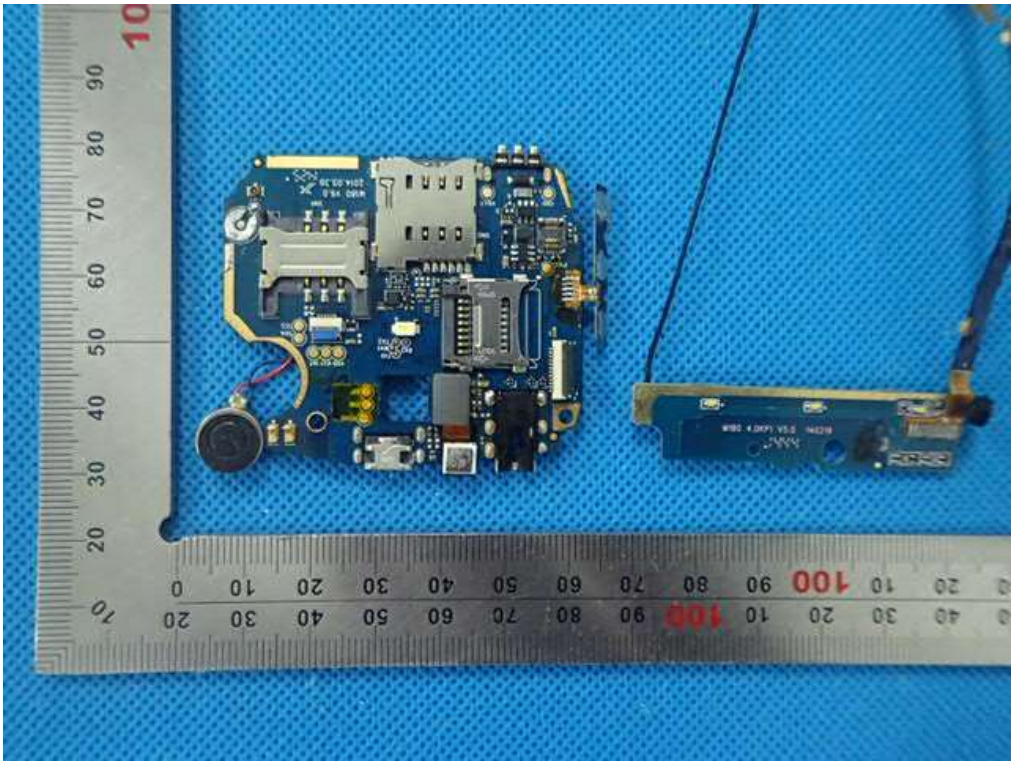

INTERNAL VIEW OF EUT-2

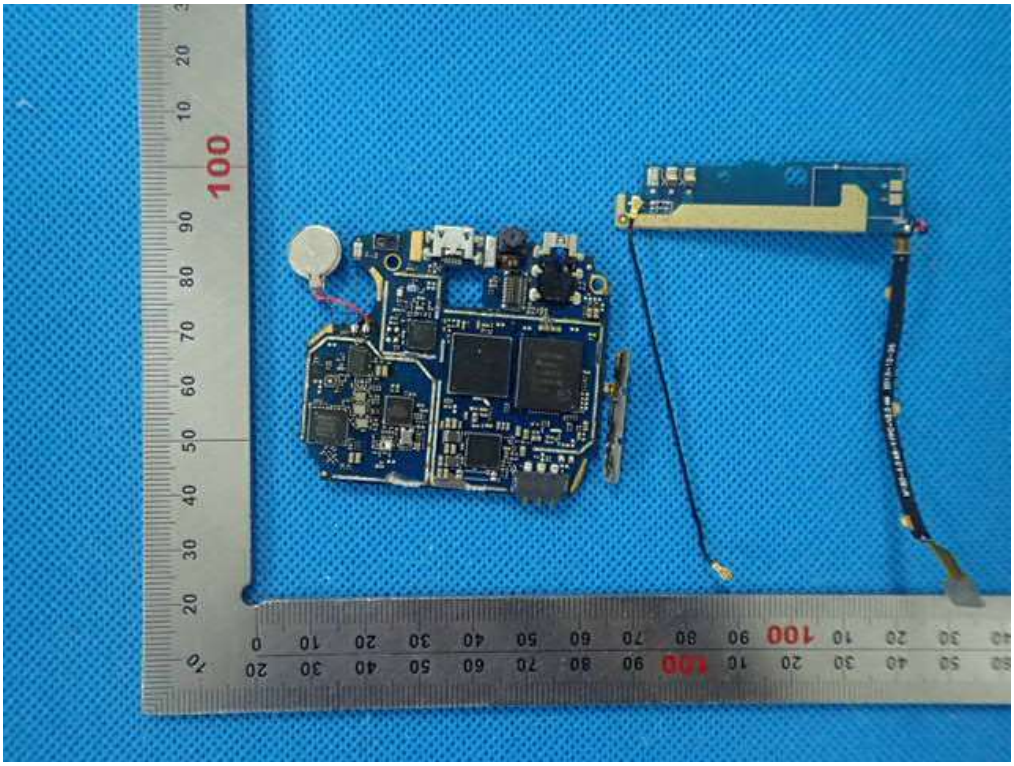

----END OF REPORT----