SAR TEST REPORT

Reference No.	:	WTS15S0628574-5E
FCC ID	:	2AE58-Z51
Applicant	:	ZIF LATINOAMERICA S.A.
Address	:	ULTIMA BODEGA PARK # 8 ESCAZO, GUACHIPELIN,SAN JOSE, COSTA RICA
Manufacturer	:	HONGKONG BAINAWEI INT'L DEVELOP CO.,LIMITED
Address	:	FLAT/RM 2715, HO KING COMMERCIAL CENTER 2-16 FA YUEN STREET MONG KOK KL HONG KONG
Product Name	:	Smart Phone
Model No.	:	Z51
Trade Name…… ….	:	ZIF
Standards	:	FCC 47 CFR Part2(2.1093) ANSI/IEEE C95.1-1999 IEEE 1528-2013 & Published RF Exposure KDB Procedures
Date of Receipt sample....	:	Jun, 24, 2015
Date of Test.....	:	Jun, 25 - 26, 2015
Date of Issue	:	July, 13, 2015
Test Result	:	Pass

Remarks:
The results shown in this test report refer only to the sample(s) tested, this test report cannot be reproduced, except in full, without prior written permission of the company. The report would be invalid without specific stamp of test institute and the signatures of compiler and approver.

Prepared By:
Waltek Services (Shenzhen) Co., Ltd.
Address: 1/F., Fukangtai Building, West Baima Road, Songgang Street, Baoan District, Shenzhen, Guangdong, China
Tel :+86-755-83551033
Fax:+86-755-83552400

Compiled by:

Zero Zhou / Project Engineer

Approved by:

Philo Zhong / Manager

1 Laboratory Introduction

Waltek Service Co., Ltd. is a professional third-party testing and certification organization with multi-year product testing and certification experience， Established strictly in accordance with ISO/IEC Guide 65 and ISO/IEC 17025， our company has got recognition from CNAS (China National Accreditation Service for Conformity Assessment) and International Laboratory Accreditation Cooperation (ILAC)。 At the same time, our company has been approved by some authoritative organizations， such as EMSD of Hongkong、UL、Intertek-ETL SEMKO、CSA、MET、TÜV Rheinland、TÜV SÜD、SGS、Nemko、FCC 、IC of Canada、CPSC、TMICO and California Energy Commission (CEC)。Since the set-up of our company, we sincerely help our customers to improve their products to achieve relative international standards. We are accepted by various clients in international market and well-known in the same industry.

There are several laboratories in our company which are equipped with advanced equipments for fully testing. It can provide testing and certification services for products exported around the world, also it can ensure that the products reach international standards in aspects of safety, electromagnetic compatibility, virulence, energy efficiency, reliability and so on. To enable our customers can get local services more directly and conveniently, and to realize our promise to provide more high quality services. Our company has set up product testing labs in South China and East China (Shenzhen, Dongguan, Foshan, Suzhou and Ningbo). We can provide our clients with accurate test and technical support services in good faith, and actively follow customer demand. These can fully demonstrate Waltek Services concept -- “One-stop Services”.

Our company has many experienced engineers and customer service representatives to meet our customer’s demand for a number of tests and provide superb technical guidance and modification service; At the same time we can provide global certification services by our global partners to help our customer’s products to successfully extend to the global market.

2 Contents

1 LABORATORY INTRODUCTION 2

2 CONTENTS 3

3 GENERAL INFORMATION 4

4 INTRODUCTION 6

5 SAR MEASUREMENT SETUP 7

6 EXPOSURE LIMIT 16

7 SYSTEM AND LIQUID VALIDATION 17

8 TYPE A MEASUREMENT UNCERTAINTY 25

9 TEST INSTRUMENT 28

10 OUTPUT POWER VERIFICATION 29

11 EXPOSURE CONDITIONS CONSIDERATION 33

12 SAR TEST RESULTS 34

13 SAR MEASUREMENT REFERENCES 39

14 CALIBRATION REPORTS-PROBE 76

15 SAR SYSTEM PHOTOS 109

16 SETUP PHOTOS 110

17 EUT PHOTOS 112

3 General Information

3.1 General Description of E.U.T.

Product Name:	Smart Phone
Model No.:	Z51
Model Description:	N/A
GSM Band(s):	GSM 850/900/1800/1900MHz
GPRS Class:	12
WCDMA Band(s):	FDD Band II/V
Wi-Fi Specification:	802.11b/g/n HT20/n HT40
Bluetooth Version:	Bluetooth v4.0 with BLE
GPS:	Support
NFC:	N/A
Hardware Version	A25E_MB_V1.0_20140310
Software Version	Z51_S5008ZIF_V0.1_20150428-194048

3.2 Details of E.U.T.

Operation Frequency	: GSM/GPRS850: 824~849MHz PCS/GPRS/1900: 1850~1910MHz WCDMA Band II: 1850-1910MHz WCDMA Band V: 824~849MHz WiFi: 802.11b/g/n HT20: 2412-2462MHz 802.11n HT40: 2422-2452MHz Bluetooth: 2402-2480MHz
Max. RF output power	: GSM 850: 32.65dBm PCS1900:29.61dBm WCDMA Band II: 22.81dBm WCDMA Band V: 22.83dBm WiFi: 9.46dBm Bluetooth: 1.4dBm
Max.SAR:	0.78 W/Kg 1g Head Tissue 0.92 W/Kg 1g Body Tissue 0.92 W/Kg 1g Hotspot Tissue
Max Simultaneous SAR	1.11 W/Kg
Type of Modulation	: GSM,GPRS: GMSK WCDMA: BPSK WiFi: CCK, OFDM Bluetooth: GFSK, Pi/4 DQPSK,8DPSK
Antenna installation	: GSM/WCDMA: internal permanent antenna WiFi/Bluetooth: internal permanent antenna

Antenna Gain	: GSM 850: -1.2dBi PCS1900: 1.5dBi WCDMA Band II: 1.5dBi WCDMA Band V: -1.2dBi WiFi: 1.6dBi Bluetooth: 1.6dBi
Adapter	:: Manufacture: ZIF Model No.: Z51
Type of Emission	: GSM850: 248KGXW, PCS1900: 247KGXW WCDMA850: 4M24F9W, WCDMA1900: 4M23F9W

4 INTRODUCTION

Introduction

This measurement report shows compliance of the EUT with ANSI/IEEE C95.1-1999 and FCC 47 CFR Part2 (2.1093)

.

The test procedures, as described in IEEE 1528-2013 Standard for IEEE Recommended Practice for Determining the Peak Spatial-Average Specific Absorption Rate (SAR) in the Human Head from Wireless Communications Devices: Measurement Techniques(300MHz~6GHz) and Published RF Exposure KDB Procedures

SAR Definition

- SAR : Specific Absorption Rate
- The SAR characterize the absorption of energy by a quantity of tissue
- This is related to a increase of the temperature of these tissues during a time period.

$$\mathrm{DAS} = \frac{\mathrm{d}}{\mathrm{d}t}\left(\frac{\mathrm{d}W}{\mathrm{d}m}\right) = \frac{\mathrm{d}}{\mathrm{d}t}\left(\frac{\mathrm{d}W}{\rho \mathrm{d}V}\right)$$

$$\mathrm{DAS} = \frac{\sigma E^2}{\rho}$$

$$\mathrm{DAS} = c_{\mathrm{h}} \left.\frac{\mathrm{d}T}{\mathrm{d}t}\right|_{t=0}$$

SAR definition

$$SAR = \frac{\sigma E^2}{\rho}$$

- SAR : Specific Absorption Rate
  - σ : Liquid conductivity
    - $\varepsilon_r = \varepsilon' - j\varepsilon''$ (complex permittivity of liquid)
    - $\sigma = \frac{\varepsilon'' \omega}{\varepsilon_0}$
  - ρ: Liquid density
    - ρ = 1000 g/L = 1000Kg/m³

where:

σ = conductivity of the tissue (S/m)
ρ = mass density of the tissue (kg/m3)
E = rms electric field strength (V/m)

5 SAR MEASUREMENT SETUP

SAR bench sub-systems

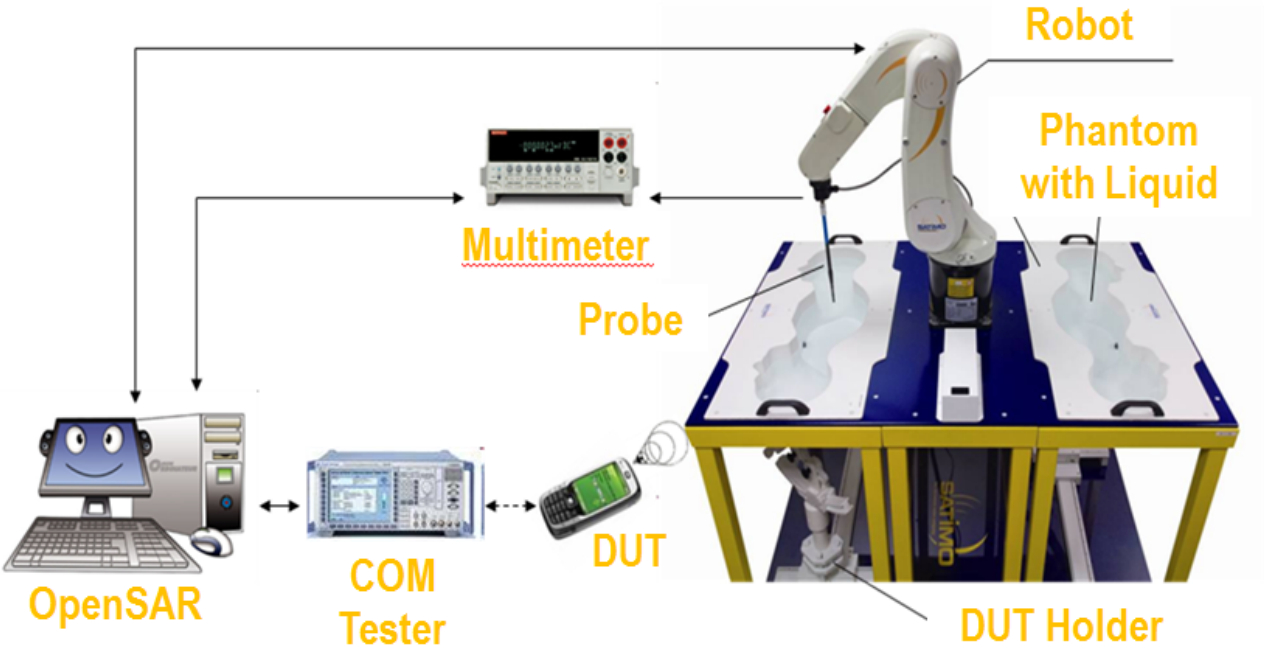

Scanning System (robot)

- It must be able to scan all the volume of the phantom to evaluate the tridimensional distribution of SAR.
- Must be able to set the probe orthogonal of the surface of the phantom (±30°).
- Detects stresses on the probe and stop itself if necessary to keep the integrity of the probe.

SAM Phantom (Specific Anthropomorphic Mannequin)

- The probe scanning of the E-Field is done in the 2 half of the normalized head.
- The normalized shape of the phantom corresponds to the dimensions of 90% of an adult head size.
- The materials for the phantom should not affect the radiation of the device under test (DUT)
  - Permittivity < 5
- The head is filled with tissue simulating liquid.
- The hand holding the DUT does not have to be modeled.

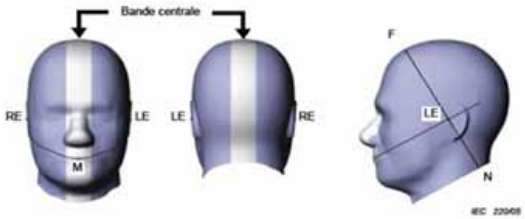

Illustration du fantôme donnant les points de référence des oreilles, RE et LE, le point de référence de la bouche, M, la ligne de référence N-F et la bande centrale

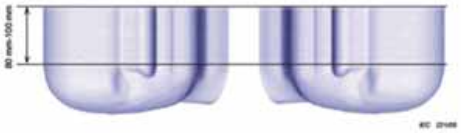

Bi-section sagittale du fantôme avec périmètre étendu (montrée sur le côté comme lors des essais de DAS de l'appareil)

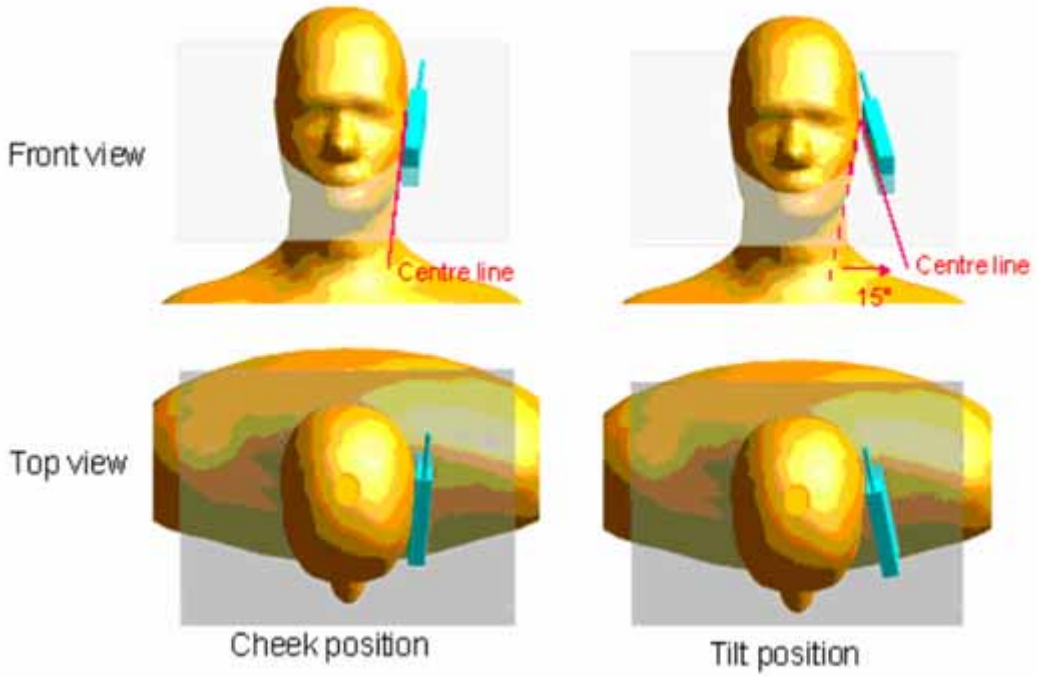

The OPENSAR system for performing compliance tests consist of the following items:

1. A standard high precision 6-axis robot (KUKA) with controller and software.
2. KUKA Control Panel (KCP).
3. A dosimetric probe, i.e., an isotropic E-field probe optimized and calibrated for usage in tissue simulating liquid. The probe is equipped with an optical surface detector system.
4. The functions of the PC plug-in card are to perform the time critical task such as signal filtering, surveillance of the robot operation fast movement interrupts.
5. A computer operating Windows 7.
6. OPENSAR software.
7. Remote control with teaches pendant and additional circuitry for robot safety such as warning lamps, etc.
8. The SAM phantom enabling testing left-hand right-hand and body usage.
9. The Position device for handheld EUT.
10. Tissue simulating liquid mixed according to the given recipes (see Application Note).
11. System validation dipoles to validate the proper functioning of the system.

Data Evaluation

The OPENSAR software automatically executes the following procedure to calculate the field units from the microvolt readings at the probe connector. The parameters used in the valuation are stored in the configuration modules of the software:

Probe Parameters	· Sensitivity	$Norm_i$
	· Conversion factor	ConvFi
	· Diode compression point Dcpi	
Device Parameter	· Frequency	f
	· Crest factor	cf
Media Parametrs	· Conductivity	σ
	· Density	ρ

These parameters must be set correctly in the software. They can either be found in the component documents or be imported into the software from the configuration files issued for the OPENSAR components.

The first step of the evaluation is a linearization of the filtered input signal to account for the compression characteristics of the detector diode. The compensation depends on the input signal, the diode type and the DC-transmission factor from the diode to the evaluation electronics. If the exciting field is pulsed, the crest factor of the signal must be known to correctly compensate for peak power. The formula for each channel can be given as

$$V_i = U_i + U_i^2 \cdot \frac{cf}{dcp_i}$$

Where V_i = *Compensated signal of channel i (i = x, y, z)*

U_i = *Input signal of channel i (i = x, y, z)*

cf = *Crest factor of exciting field (DASY parameter)*

dcp_i = *Diode compression point (DASY parameter)*

From the compensated input signals the primary field data for each channel can be evaluated:

E-field probes: $E_i = \sqrt{\frac{V_i}{Norm_i \cdot ConvF}}$

H-field probes: $H_i = \sqrt{Vi} \cdot \frac{a_{i10} + a_{i11} f + a_{i12} f^2}{f}$

Where V_i = *Compensated signal of channel i (i = x, y, z)*
$Norm_i$ = *Sensor sensitivity of channel i (i = x, y, z)*
μV/(V/m)2 for E0field Probes
ConvF= Sensitivity enhancement in solution
a_{ij} = *Sensor sensitivity factors for H-field probes*

f = *Carrier frequency (GHz)*
E_i = *Electric field strength of channel i in V/m*
H_i = *Magnetic field strength of channel i in A/m*

The RSS value of the field components gives the total field strength (Hermitian magnitude):

$$E_{tot} = \sqrt{E_x^2 + E_y^2 + E_z^2}$$

The primary field data are used to calculate the derived field units.

$$SAR = E_{tot}^2 \cdot \frac{\sigma}{\rho \cdot 1000}$$

where SAR = *local specific absorption rate in mW/g*
E_{tot} = *total field strength in V/m*
σ = *conductivity in [mho/m] or [siemens/m]*
ρ = *equivalent tissue density in g/cm3*

Note that the density is normally set to 1 (or 1.06), to account for actual brain density rather than the density of the simulation liquid.

The power flow density is calculated assuming the excitation field as a free space field.

$$P_{pwe} = \frac{E_{tot}^2}{3770} \quad \text{or} \quad P_{pwe} = H_{tot}^2 \cdot 37.7$$

where P_{pwe} = *Equivalent power density of a plane wave in mW/cm2*
E_{tot} = *total electric field strength in V/m*
H_{tot} = *total magnetic field strength in A/m*

SAR Evaluation – Peak Spatial - Average

The procedure for assessing the peak spatial-average SAR value consists of the following steps

- **Power Reference Measurement**

  The reference and drift jobs are useful jobs for monitoring the power drift of the device under test in the batch process. Both jobs measure the field at a specified reference position, at a selectable distance from the phantom surface. The reference position can be either the selected section's grid reference point or a user point in this section. The reference job projects the selected point onto the phantom surface, orients the probe perpendicularly to the surface, and approaches the surface using the selected detection method.

- **Area Scan**

  The area scan is used as a fast scan in two dimensions to find the area of high field values, before doing a finer measurement around the hot spot. The sophisticated interpolation routines implemented in OPENSAR software can find the maximum locations even in relatively coarse grids. The scan area is defined by an editable grid. This grid is anchored at the grid reference point of the selected section in the phantom. When the area scan's property sheet is brought-up, grid was at to 15 mm by 15 mm and can be edited by a user.

- **Zoom Scan**

  Zoom scans are used to assess the peak spatial SAR values within a cubic averaging volume containing 1 g and 10 g of simulated tissue. The default zoom scan measures 5 x 5 x 7 points within a cube whose base faces are centered around the maximum found in a preceding area scan job within the same procedure. If the preceding Area Scan job indicates more then one maximum, the number of Zoom Scans has to be enlarged accordingly (The default number inserted is 1).

- **Power Drift measurement**

  The drift job measures the field at the same location as the most recent reference job within the same procedure, and with the same settings. The drift measurement gives the field difference in dB from the reading conducted within the last reference measurement. Several drift measurements are possible for one reference measurement. This allows a user to monitor the power drift of the device under test within a batch process. In the properties of the Drift job, the user can specify a limit for the drift and have OPENSAR software stop the measurements if this limit is exceeded.

SAR Evaluation – Peak SAR

The procedure for spatial peak SAR evaluation has been implemented according to the IEEE1529 standard. It can be conducted for 1 g and 10 g. The OPENSAR system allows evaluations that combine measured data and robot positions, such
as:

- maximum search
- extrapolation
- boundary correction
- peak search for averaged SAR

During a maximum search, global and local maximum searches are automatically performed in 2-D after each Area Scan measurement with at least 6 measurement points. It is based on the evaluation of the local SAR gradient calculated by the Quadratic Shepard's method. The algorithm will find the global maximum and all local maxima within -2 dB of the global maxima for all SAR distributions.

Extrapolation

Extrapolation routines are used to obtain SAR values between the lowest measurement points and the inner phantom surface. The extrapolation distance is determined by the surface detection distance and the probe sensor offset. Several measurements at different distances are necessary for the extrapolation.
They are used in the Cube Scan to obtain SAR values between the lowest measurement points and the inner phantom surface. The routine uses the fourth order least square polynomial method for extrapolation. For a grid using 5x5x7 measurement points with 5mm resolution amounting to 343 measurement points, the uncertainty of the extrapolation routines is less than 1% for 1 g and 10 g cubes.

Definition of Reference Points

Ear Reference Point

Figure 6.2 shows the front, back and side views of the SAM Phantom. The point "M" is the reference point for the center of the mouth, "LE" is the left ear reference point (ERP), and "RE" is the right ERP. The ERPs are 15mm posterior to the entrance to the ear canal (EEC) along the B-M line (Back-Mouth), as shown in Figure 6.1. The plane passing through the two ear canals and M is defined as the Reference Plane. The line N-F (Neck-Front) is perpendicular to the reference plane and passing through the RE (or LE) is called the Reference Pivoting Line (see Figure 6.1). Line B-M is perpendicular to the N-F line. Both N-F and B-M lines are marked on the external phantom shell to facilitate handset positioning [5].

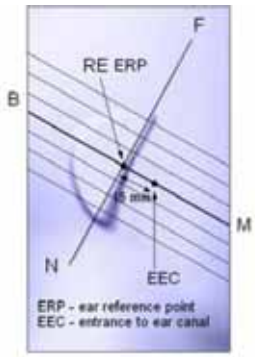

Figure 6.1 Close-up side view of ERP's

Figure 6.2 Front, back and side view of SAM

Device Reference Points

Two imaginary lines on the device need to be established: the vertical centerline and the horizontal line. The test device is placed in a normal operating position with the "test device reference point" located along the "vertical centerline" on the front of the device aligned to the "ear reference point" (See Fig. 6.3). The "test device reference point" is than located at the same level as the center of the ear reference point. The test device is positioned so that the "vertical centerline" is bisecting the front surface of the device at it's top and bottom edges, positioning the "ear reference point" on the outer surface of both the left and right head phantoms on the ear reference point [5].

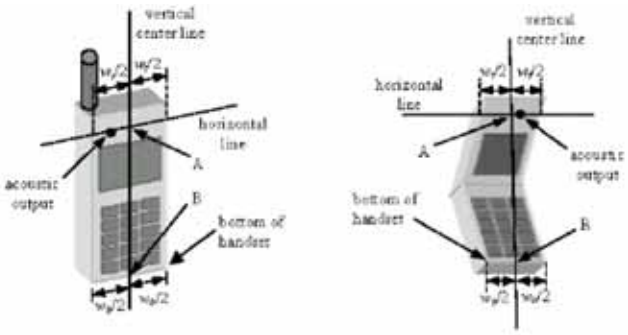

Figure 6.3 Handset Vertical Center & Horizontal Line Reference Points

Test Configuration – Positioning for Cheek / Touch

1. Position the device close to the surface of the phantom such that point A is on the (virtual) extension of the line passing through points RE and LE on the phantom (see Figure below), such that the plane defined by the vertical center line and the horizontal line of the device is approximately parallel to the sagittal plane of the phantom

Figure 7.1 Front, Side and Top View of Cheek/Touch Position

2. Translate the device towards the phantom along the line passing through RE and LE until the device touches the ear.

3. While maintaining the device in this plane, rotate it around the LE-RE line until the vertical centerline is in the plane normal to MB-NF including the line MB (called the reference plane).
4. Rotate the device around the vertical centerline until the device (horizontal line) is symmetrical with respect to the line NF.

5. While maintaining the vertical centerline in the reference plane, keeping point A on the line passing through RE and LE and maintaining the device contact with the ear, rotate the device about the line NF until any point on the device is in contact with a phantom point below the ear (cheek). See Figure below.

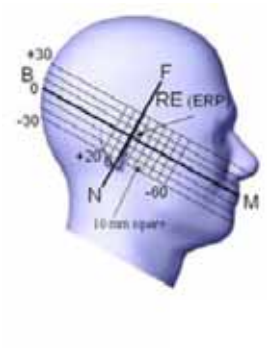

Figure 7.2 Side view w/ relevant markings

Test Configuration – Positioning for Ear / 15° Tilt

With the test device aligned in the Cheek/Touch Position":

1. While maintaining the orientation of the device, retracted the device parallel to the reference plane far enough to enable a rotation of the device by 15 degrees.

2. Rotate the device around the horizontal line by 15 degrees.

3. While maintaining the orientation of the device, move the device parallel to the reference plane until any part of the device touches the head. (In this position, point A is located on the line RE-LE). The tilted position is obtained when the contact is on the pinna. If the contact is at any location other than the pinna, the angle of the device shall be reduced. The tilted position is obtained when any part of the device is in contact with the ear as well as a second part of the device is in contact with the head (see Figure below).

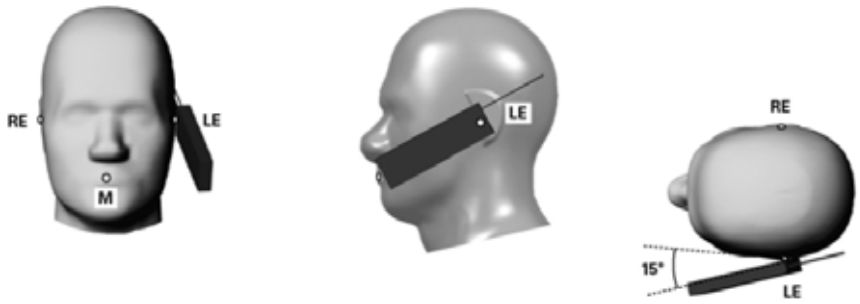

Figure 7.3 Front, Side and Top View of Ear/15° Tilt Position

Test Position – Body Configurations

Body Worn Position
(a) To position the device parallel to the phantom surface with either keypad up or down.
(b) To adjust the device parallel to the flat phantom.
(c) To adjust the distance between the device surface and the flat phantom to 1.5 cm or holster surface and the flat phantom
to 0 cm.

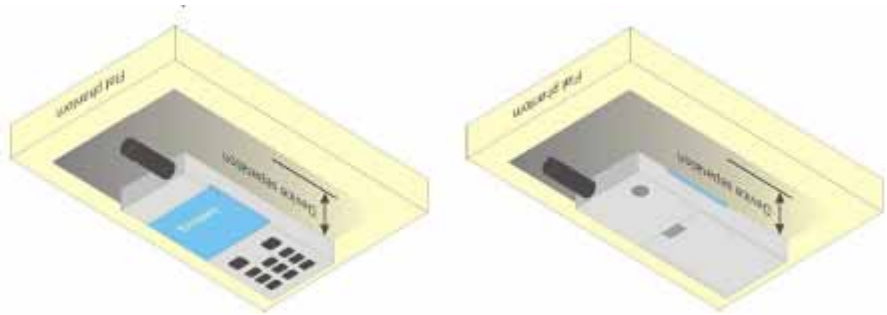

6 EXPOSURE LIMIT

In order for users to be aware of the body-worn operating requirements for meeting RF exposure compliance, operating instructions and cautions statements are included in the user's manual.

Uncontrolled Environment

Uncontrolled Environments are defined as locations where there is the exposure of individuals who have no knowledge or control of their exposure. The general population/uncontrolled exposure limits are applicable to situations in which the general public may be exposed or in which persons who are exposed as a consequence of their employment may not be made fully aware of the potential for exposure or cannot exercise control over their exposure. Members of the general public would come under this category when exposure is not employment-related; for example, in the case of a wireless transmitter that exposes persons in its vicinity.

Controlled Environment

Controlled Environments are defined as locations where there is exposure that may be incurred by persons who are aware of the potential for exposure, (i.e. as a result of employment or occupation). In general, occupational/controlled exposure limits are applicable to situations in which persons are exposed as a consequence of their employment, who have been made fully aware of the potential for exposure and can exercise control over their exposure. This exposure category is also applicable when the exposure is of a transient nature due to incidental passage through a location where the exposure levels may be higher than the general population/uncontrolled limits, but the exposed person is fully aware of the potential for exposure and can exercise control over his or her exposure by leaving the area or by some other appropriate means.

Table 8.1 Human Exposure Limits

	UNCONTROLLED ENVIRONMENT General Population (W/kg) or (mW/g)	CONTROLLED ENVIROMENT Professional Population (W/kg) or (mW/g)
SPATIAL PEAK SAR[1] Brain	1.60	8.00
SPATIAL AVERAGE SAR[2] Whole Body	0.08	0.40
SPATIAL PEAK SAR[3] Hands, Feet, Ankles, Wrists	4.00	20.00

[1] The Spatial Peak value of the SAR averaged over any 1 gram of tissue (defined as a tissue volume in the shape of a cube) and over the appropriate averaging time.
[2] The Spatial Average value of the SAR averaged over the whole body.
[3] The Spatial Peak value of the SAR averaged over any 10 grams of tissue (defined as a tissue volume in the shape of a cube) and over the appropriate averaging time.

7 SYSTEM AND LIQUID VALIDATION

System Validation

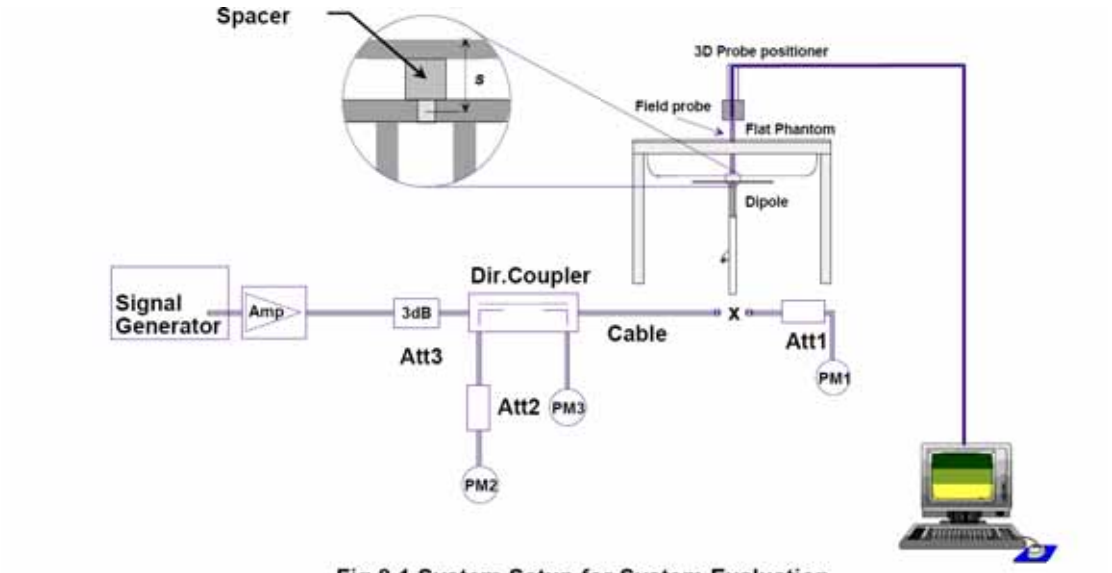

Fig 8.1 System Setup for System Evaluation

The system performance check verifies that the system operates within its specifications. System and operator errors can be detected and corrected. It is recommended that the system performance check be performed prior to any usage of the system in order to guarantee reproducible results. The system performance check uses normal SAR measurements in a simplified setup with a well characterized source. This setup was selected to give a high sensitivity to all parameters that might fail or vary over time. The system check does not intend to replace the calibration of the components, but indicates situations where the system uncertainty is exceeded due to drift or failure.

In the simplified setup for system evaluation, the DUT is replaced by a calibrated dipole and the power source is replaced by a continuous wave that comes from a signal generator. The calibrated dipole must be placed beneath the flat phantom section of the SAM twin phantom with the correct distance holder. The distance holder should touch the phantom surface with a light pressure at the reference marking and be oriented parallel to the long side of the phantom. The equipment setup is shown below:

1. Signal Generator
2. Amplifier
3. Directional Coupler
4. Power Meter
5. Calibrated Dipole

The output power on dipole port must be calibrated to 30 dBm (1000 mW) before dipole is connected.

Numerical reference SAR values (W/kg) for reference dipole and flat phantom

Frequency (MHz)	1 g SAR	10 g SAR	Local SAR at surface (above feed-point)	Local SAR at surface (y = 2 cm offset from feed-point)[a]
300	3.0	2.0	4.4	2.1
450	4.9	3.3	7.2	3.2
835	9.5	6.2	4.1	4.9
900	10.8	6.9	16.4	5.4
1450	29.0	16.0	50.2	6.5
1800	38.1	19.8	69.5	6.8
1900	39.7	20.5	72.1	6.6
2000	41.1	21.1	74.6	6.5
2450	52.4	24.0	104.2	7.7
3000	63.8	25.7	140.2	9.5

Target and measurement SAR after Normalized:

Measurement Date	Frequency (MHz)	Liquid Type (head/body)	Target SAR10g (W/kg)	Measured SAR10g (W/kg)	Normalized SAR10g (W/kg)	Deviation (%)
June 25, 2015	835	head	9.53	0.192	9.6	0.73
June 25, 2015	835	body	9.44	0.199	9.95	5.40
June 26, 2015	1900	head	39.37	0.815	40.75	3.51
June 26, 2015	1900	body	38.50	0.835	41.75	8.44

Note: system check input power: 20mW

Liquid Validation

The dielectric parameters were checked prior to assessment using the HP85070C dielectric probe kit. The dielectric parameters measured are reported in each correspondent section.

KDB 865664 recommended Tissue Dielectric Parameters

The head and body tissue parameters given in this below table should be used to measure the SAR of transmitters operating in 100 MHz to 6 GHz frequency range. The tissue dielectric parameters of the tissue medium at the test frequency should be within the tolerance required in this document. The dielectric parameters should be linearly interpolated between the closest pair of target frequencies to determine the applicable dielectric parameters corresponding to the device test frequency.

The head tissue dielectric parameters recommended by IEEE Std 1528-2003 have been incorporated in the following table. These head parameters are derived from planar layer models simulating the highest expected SAR for the dielectric properties and tissue thickness variations in a human head. Other head and body tissue parameters that have not been specified in 1528 are derived from tissue dielectric parameters computed from the 4-Cole-Cole equations described above and extrapolated according to the head parameters specified in 1528.

Target Frequency	Head/Body	
MHz	εr	σ (S/m)
300	45.3	0.87
450	43.5	0.87
835	41.5	0.90
900	41.5	0.97
915	41.5	0.98
1450	40.5	1.20
1610	40.3	1.29
1800-2000	40.0	1.40
2450	39.2	1.80
3000	38.5	2.40
5800	35.3	5.27

Liquid Confirmation Result:

Temperature: 21°C , Relative humidity: 57% , Measured Date: June 25th, 2015			
835(MHz)	**Description**	**Dielectric Parameters**	
		εr	**σ(s/m)**
Head	Target Value ±5% window	41.50 39.43 — 43.58	0.90 0.855 — 0.945
	Measurement Value	41.76	0.88
Body	Target Value ±5% window	55.2 52.25 — 57.75	0.97 0.922 — 1.018
	Measurement Value	55.72	0.96

Temperature: 21°C , Relative humidity: 57% , Measured Date: June 26th, 2015			
1900(MHz)	**Description**	**Dielectric Parameters**	
		εr	**σ(s/m)**
Head	Target Value ±5% window	40.00 38.00 — 42.00	1.40 1.33 — 1.47
	Measurement Value	40.37	1.38
Body	Target Value ±5% window	53.30 50.64 — 55.97	1.52 1.44 — 1.60
	Measurement Value	53.62	1.50

System Verification Plots

Product Description: Dipole
Model: SID835
Test Date: June 25th, 2015

Medium(liquid type)	HSL_835
Frequency (MHz)	835.000000
Relative permittivity (real part)	41.76
Conductivity (S/m)	0.88
Input power	20mW
E-Field Probe	SN 07/15 EP246
Crest factor	1.0
Conversion Factor	4.66
Sensor-surface	4mm
Area Scan	dx=8mm dy=8mm
Zoom Scan	5x5x7,dx=8mm dy=8mm dz=5mm
Variation (%)	0.75000
SAR 10g (W/Kg)	0.132164
SAR 1g (W/Kg)	0.191640

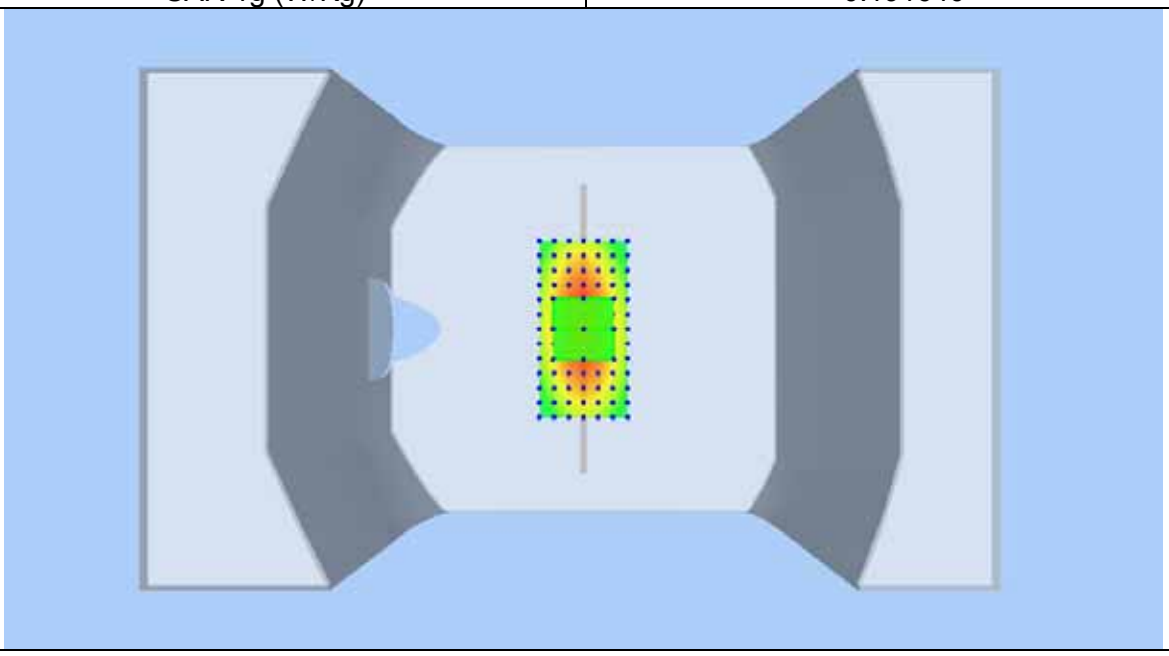

Product Description: Dipole
Model: SID835
Test Date: June 25th, 2015

Medium(liquid type)	MSL_835
Frequency (MHz)	835.000000
Relative permittivity (real part)	55.72
Conductivity (S/m)	0.96
Input power	20mW
E-Field Probe	SN 07/15 EP246
Crest factor	1.0
Conversion Factor	4.80
Sensor-surface	4mm
Area Scan	dx=8mm dy=8mm
Zoom Scan	5x5x7,dx=8mm dy=8mm dz=5mm
Variation (%)	-0.93000
SAR 10g (W/Kg)	0.131075
SAR 1g (W/Kg)	0.199473

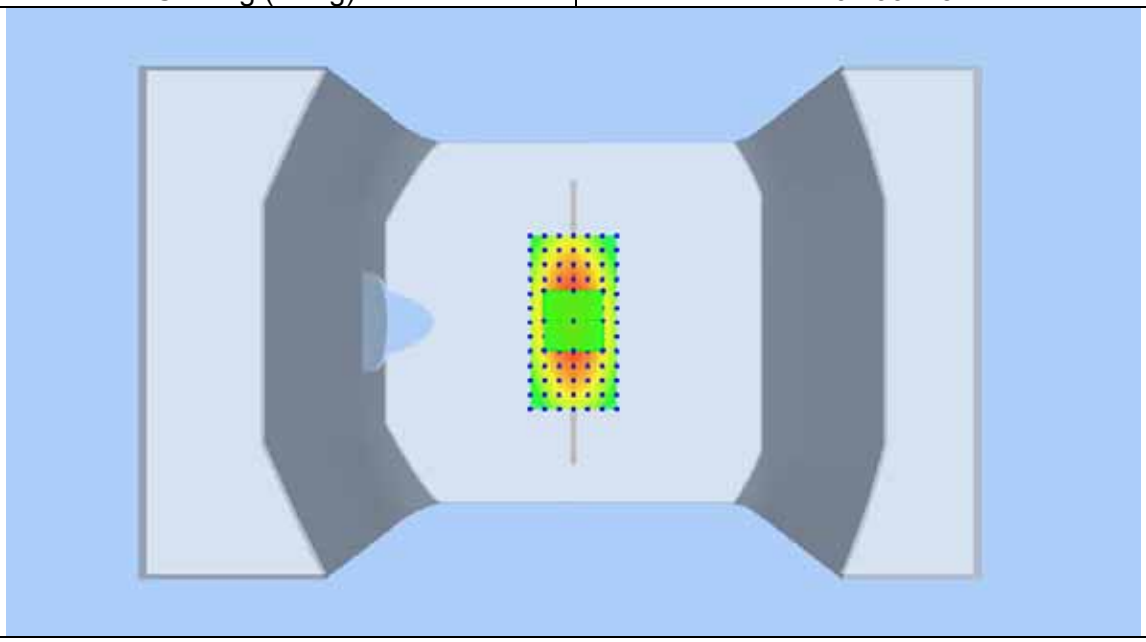

Product Description: Dipole
Model: SID1900
Test Date: June 26th, 2015

Medium(liquid type)	HSL_1900
Frequency (MHz)	1900.000
Relative permittivity (real part)	40.37
Conductivity (S/m)	1.38
Input power	20mW
E-Field Probe	SN 07/15 EP246
Crest factor	1.0
Conversion Factor	4.45
Sensor-Surface	4mm
Area Scan	dx=8mm dy=8mm
Zoom Scan	5x5x7,dx=8mm dy=8mm dz=5mm
Variation (%)	0.84000
SAR 10g (W/Kg)	0.426496
SAR 1g (W/Kg)	0.815438

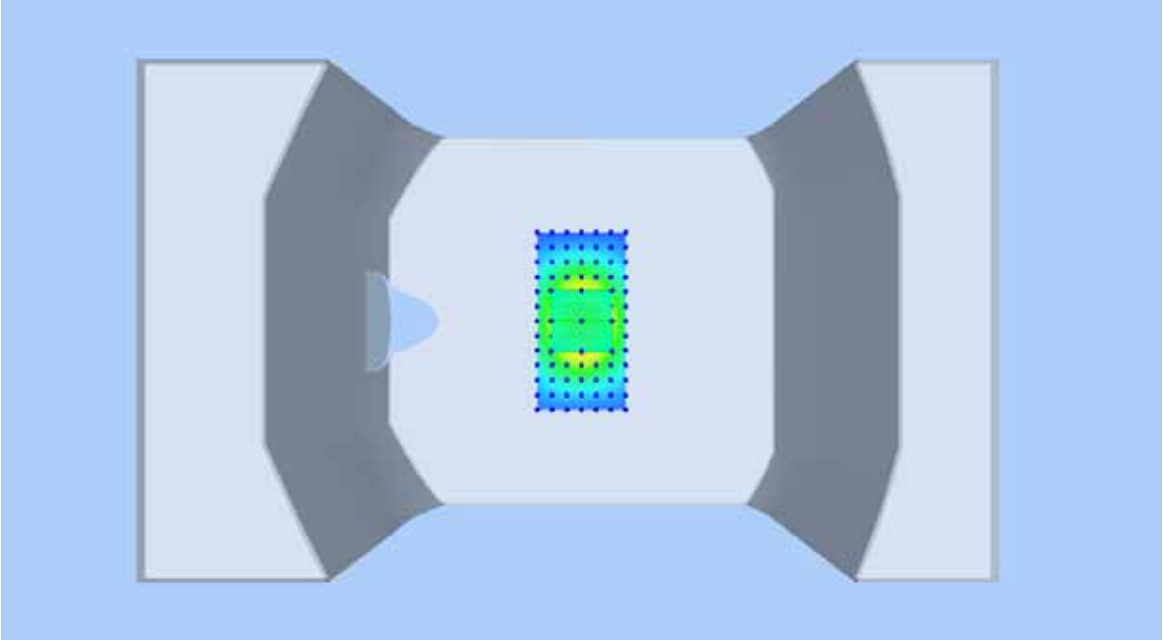

Product Description: Dipole
Model: SID1900
Test Date: June 26th, 2015

Medium(liquid type)	MSL_1900
Frequency (MHz)	1900.000
Relative permittivity (real part)	53.62
Conductivity (S/m)	1.50
Input power	20mW
E-Field Probe	SN 07/15 EP246
Crest factor	1.0
Conversion Factor	4.57
Sensor-Surface	4mm
Area Scan	dx=8mm dy=8mm
Zoom Scan	5x5x7,dx=8mm dy=8mm dz=5mm
Variation (%)	-1.45
SAR 10g (W/Kg)	0.432975
SAR 1g (W/Kg)	0.834504

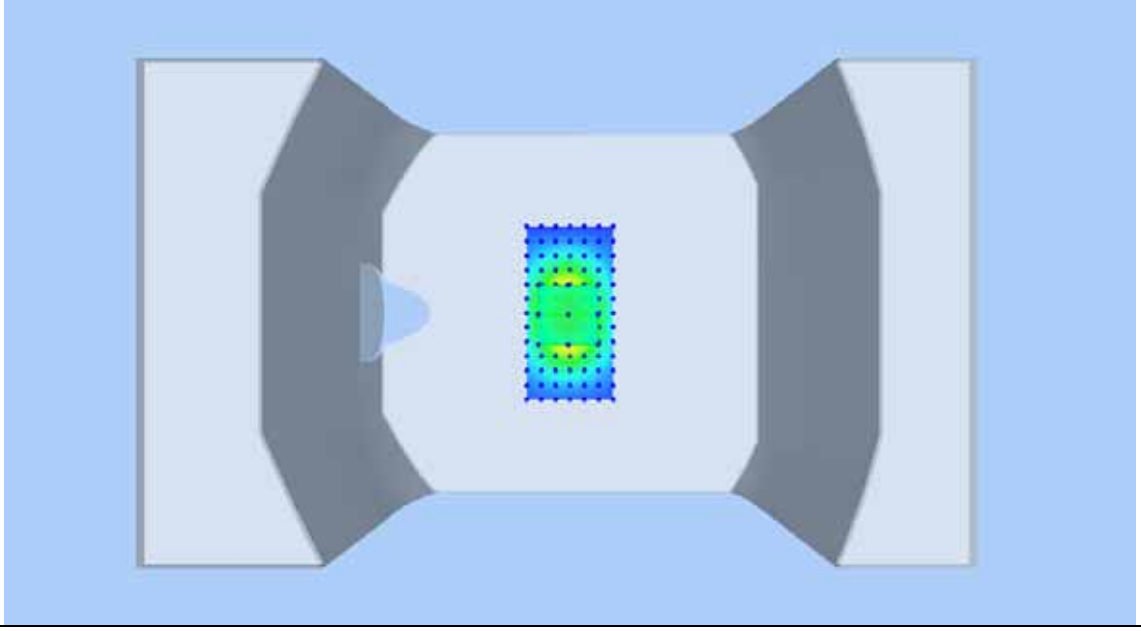

8 TYPE A MEASUREMENT UNCERTAINTY

The component of uncertainly may generally be categorized according to the methods used to evaluate them. The evaluation of uncertainly by the statistical analysis of a series of observations is termed a Type An evaluation of uncertainty. The evaluation of uncertainty by means other than the statistical analysis of a series of observation is termed a Type B evaluation of uncertainty. Each component of uncertainty, however evaluated, is represented by an estimated standard deviation, termed standard uncertainty, which is determined by the positive square root of the estimated variance

A Type A evaluation of standard uncertainty may be based on any valid statistical method for treating data. This includes calculating the standard deviation of the mean of a series of independent observations; using the method of least squares to fit a curve to the data in order to estimate the parameter of the curve and their standard deviations; or carrying out an analysis of variance in order to identify and quantify random effects in certain kinds of measurement.

A type B evaluation of standard uncertainty is typically based on scientific judgment using all of the relevant information available. These may include previous measurement data, experience and specification, data provided in calibration reports and uncertainties assigned to reference data taken from handbooks. Broadly speaking, the uncertainty is either obtained from an outdoor source or obtained from an assumed distribution, such as the normal distribution, rectangular or triangular distributions indicated in Table below :

Uncertainty Distribution	*Normal*	*Rectangle*	*Triangular*	*U Shape*
Multi-plying Factor[(a)]	*1/k[(b)]*	*1 / √3*	*1 / √6*	*1 / √2*

(a) standard uncertainty is determined as the product of the multiplying factor and the estimated range of variations in the measured quantity
(b) κ is the coverage factor

Standard Uncertainty for Assumed Distribution

The combined standard uncertainty of the measurement result represents the estimated standard deviation of the result. It is obtained by combining the individual standard uncertainties of both Type A and Type -sum- by taking the positive square root of the estimated variances.

Expanded uncertainty is a measure of uncertainty that defines an interval about the measurement result within which the measured value is confidently believed to lie. It is obtained by multiplying the combined standard uncertainty by a coverage factor. Typically, the coverage factor ranges from 2 to 3. Using a coverage factor allows the true value of a measured quantity to be specified with a defined probability within the specified uncertainty range. For purpose of this document, a coverage factor two is used, which corresponds to confidence interval of about 95 %.

The COMOSAR Uncertainty Budget is show in below table:

UNCERTAINTY FOR SYSTEM PERFORMANCE CHECK

Uncertainty Component	Tol. (± %)	Prob. Dist.	Div.	ci (1 g)	ci (10 g)	1 g ui (± %)	10 g ui (± %)	vi
Measurement System								
Probe Calibration	5,8	N	1	1	1	5,8	5,8	∞
Axial Isotropy	3,5	R	√3	(1-cp)1/2	(1-cp)1/2	1,42887	1,42887	∞
Hemispherical Isotropy	5,9	R	√3	√Cp	√Cp	2,40866	2,40866	∞
Boundary Effect	1	R	√3	1	1	0,57735	0,57735	∞
Linearity	4,7	R	√3	1	1	2,71355	2,71355	∞
System Detection Limits	1	R	√3	1	1	0,57735	0,57735	∞
Readout Electronics	0,5	N	1	1	1	0,5	0,5	∞
Response Time	0	R	√3	1	1	0	0	∞
Integration Time	1,4	R	√3	1	1	0,80829	0,80829	∞
RF Ambient Conditions	3	R	√3	1	1	1,73205	1,73205	∞
Probe Positioner Mechanical Tolerance	1,4	R	√3	1	1	0,80829	0,80829	∞
Probe Positioning with respect to Phantom Shell	1,4	R	√3	1	1	0,80829	0,80829	∞
Extrapolation, interpolation and Integration Algorithms for Max. SAR Evaluation	2,3	R	√3	1	1	1,32791	1,32791	∞
Dipole								
Dipole Axis to Liquid Distance	2	N	√3	1	1	1,1547	1,1547	N-1
Input Power and SAR drift measurement	5	R	√3	1	1	2,88675	2,88675	∞
Phantom and Tissue Parameters								
Phantom Uncertainty (shape and thickness tolerances)	4	R	√3	1	1	2,3094	2,3094	∞
Liquid Conductivity - deviation from target values	5	R	√3	0,64	0,43	1,84752	1,2413	∞
Liquid Conductivity - measurement uncertainty	4	N	1	0,64	0,43	2,56	1,72	M
Liquid Permittivity - deviation from target values	5	R	√3	0,6	0,49	1,73205	1,41451	∞
Liquid Permittivity - measurement uncertainty	5	N	1	0,6	0,49	3	2,45	M
Combined Standard Uncertainty		RSS				9.6671	9.1646	
Expanded Uncertainty (95% CONFIDENCE INTERVAL)		k				19.3342	18.3292	

UNCERTAINTY EVALUATION FOR HANDSET SAR TEST

Uncertainty Component	Tol. (± %)	Prob. Dist.	Div.	c_i (1 g)	c_i (10 g)	1 g u_i (± %)	10 g u_i (± %)	v_i
Measurement System								
Probe Calibration	5,8	N	1	1	1	5,8	5,8	∞
Axial Isotropy	3,5	R	√3	$(1-c_p)^{1/2}$	$(1-c_p)^{1/2}$	1,43	1,43	∞
Hemispherical Isotropy	5,9	R	√3	$\sqrt{C_p}$	$\sqrt{C_p}$	2,41	2,41	∞
Boundary Effect	1	R	√3	1	1	0,58	0,58	∞
Linearity	4,7	R	√3	1	1	2,71	2,71	∞
System Detection Limits	1	R	√3	1	1	0,58	0,58	∞
Readout Electronics	0,5	N	1	1	1	0,50	0,50	∞
Response Time	0	R	√3	1	1	0,00	0,00	∞
Integration Time	1,4	R	√3	1	1	0,81	0,81	∞
RF Ambient Conditions	3	R	√3	1	1	1,73	1,73	∞
Probe Positioner Mechanical Tolerance	1,4	R	√3	1	1	0,81	0,81	∞
Probe Positioning with respect to Phantom Shell	1,4	R	√3	1	1	0,81	0,81	∞
Extrapolation, interpolation and Integration Algorithms for Max. SAR Evaluation	2,3	R	√3	1	1	1,33	1,33	∞
Test sample Related								
Test Sample Positioning	2,6	N	1	1	1	2,60	2,60	N-1
Device Holder Uncertainty	3	N	1	1	1	3,00	3,00	N-1
Output Power Variation - SAR drift measurement	5	R	√3	1	1	2,89	2,89	∞
Phantom and Tissue Parameters								
Phantom Uncertainty (shape and thickness tolerances)	4	R	√3	1	1	2,31	2,31	∞
Liquid Conductivity - deviation from target values	5	R	√3	0,64	0,43	1,85	1,24	∞
Liquid Conductivity - measurement uncertainty	4	N	1	0,64	0,43	2,56	1,72	M
Liquid Permittivity - deviation from target values	5	R	√3	0,6	0,49	1,73	1,41	∞
Liquid Permittivity - measurement uncertainty	5	N	1	0,6	0,49	3,00	2,45	M
Combined Standard Uncertainty		RSS				10.39	9.92	
Expanded Uncertainty (95% CONFIDENCE INTERVAL)		k				20.78	19.84	

9 TEST INSTRUMENT

Name of Equipment	Manufacturer	Type/Model	Serial Number	Calibration Date	Calibration Due
S-Parameter Network Analyzer	Agilent	8753E	JP38160684	2015-04-02	2016-04-01
Universal Radio Communication Tester	ROHDE&SCHW ARZ	CMU200	112461	2015-03-23	2016-03-22
E-Field Probe	MVG	SSE5	SN 07/15 EP246	2015-03-16	2016-03-15
DIPOLE 835	MVG	SID835	SN 09/15 DIP 0G835-358	2015-03-16	2016-03-15
DIPOLE 1900	MVG	SID1900	SN 09/15 DIP 1G900-361	2015-03-16	2016-03-15
Limesar Dielectric Probe	MVG	SCLMP	SN 11/15 OCPG 69	2015-03-16	2016-03-15
Power Amplifier	BONN	BLWA 0830 - 160/100/40 D	128740	2014-09-15	2015-09-14
Signal Generator	R&S	SMB100A	105942	2014-09-15	2015-09-14
Power Meter	R&S	NRP2	102031	2014-09-15	2015-09-14

10 OUTPUT POWER VERIFICATION

Test Condition:

1. Conducted Measurement
   EUT was set for low, mid, high channel with modulated mode and highest RF output power.
   The base station simulator was connected to the antenna terminal.
2. Conducted Emissions Measurement Uncertainty
   All test measurements carried out are traceable to national standards. The uncertainty of the measurement at a confidence level of approximately 95% (in the case where distributions are normal), with a coverage factor of 2, in the range 30MHz – 40GHz is ±1.5dB.
3. Environmental Conditions

Temperature	23°C
Relative Humidity	53%
Atmospheric Pressure	1019mbar

4. Test Date : June 25, 2015
   Tested By : Damon Wang

Test Procedures:

Smart Phone radio output power measurement

1. The transmitter output port was connected to base station emulator.
2. Establish communication link between emulator and EUT and set EUT to operate at maximum output power all the time.
3. Select lowest, middle, and highest channels for each band and different possible test mode.
4. Measure the conducted peak burst power and conducted average burst power from EUT antenna port.

Other radio output power measurement

The output power was measured using power meter at low, mid, and hi channels.

Source-based Time Averaged Burst Power Calculation:

For TDMA, the following duty cycle factor was used to calculate the source-based time average power

Number of Time slot	1	2	3	4
Duty Cycle	1:8	1:4	1:2.66	1:2
Duty cycle factor	-9.03 dB	-6.02 dB	-4.26 dB	-3.01 dB
Crest Factor	8	4	2.66	2

Remark: *Time slot duty cycle factor = 10 * log (1 / Time Slot Duty Cycle)*
Source based time averaged power = Maximum burst averaged power (1 Uplink) – 9.03 dB
Source based time averaged power = Maximum burst averaged power (2 Uplink) – 6.02 dB
Source based time averaged power = Maximum burst averaged power (4 Uplink) – 3.01 Db

Test Result:

Burst Average Power (dBm);								
Band	**GSM850**				**PCS1900**			
Channel	128	190	251	Tune up Power tolerant	512	661	810	Tune up Power tolerant
Frequency (MHz)	824.2	836.6	848.8	/	1850.2	1880	1909.8	/
GSM Voice	32.45	32.42	32.64	32±1	29.19	29.43	29.61	29±1
GPRS Multi-Slot Class8 (1 Uplink)	32.48	32.4	32.65	32±1	29.24	29.42	29.58	29±1
GPRS Multi-Slot Class10 (2 Uplink)	31.86	31.81	32.03	31±1	28.39	28.76	29.06	28±1
GPRS Multi-Slot Class12 (4 Uplink)	29.22	29.12	29.35	29±1	25.36	26	26.77	26±1
Remark : GPRS, CS1 coding scheme. Multi-Slot Class 8 , Support Max 4 downlink, 1 uplink , 5 working link Multi-Slot Class 10 , Support Max 4 downlink, 2 uplink , 5 working link Multi-Slot Class 12 , Support Max 4 downlink, 4 uplink , 5 working link								

Source Based time Average Power (dBm)								
Band	**GSM850**				**PCS1900**			
Channel	975	62	124	Time Average factor	512	699	885	Time Average factor
Frequency (MHz)	880.2	902.4	914.8	/	1710.2	1747.6	1784.8	/
GSM Voice	23.42	23.39	23.61	-9.03	20.16	10.40	10.58	-9.03
GPRS Multi-Slot Class8 (1 Uplink)	23.45	23.37	23.62	-9.03	20.21	20.39	20.55	-9.03
GPRS Multi-Slot Class10 (2 Uplink)	25.84	25.79	26.01	-6.02	22.37	22.74	23.04	-6.02
GPRS Multi-Slot Class12 (4 Uplink)	26.21	26.11	26.34	-3.01	22.35	22.99	23.76	-3.01
Remark : Time average factor = 1 uplink , 10*log(1/8)=-9.03dB , 2 uplink , 10*log(2/8)=-6.02dB , 4 uplink , 10*log(4/8)=-3.01dB Source based time average power = Burst Average power + Time Average factor								

Note: DUT was set in GPRS-Multi-slot Class12 with 4Uplink due to the Maximum source-base time average output power for body SAR.

WCDMA - Average Power (dBm)								
Band	**WCDMA Band II**				**WCDMA Band V**			
Channel	**9262**	**9400**	**9538**	**Tune up Power tolerant**	**4132**	**4183**	**4233**	**Tune up Power tolerant**
Frequency (MHz)	**1852.4**	**1880**	**1907.6**	/	**826.4**	**836.6**	**846.6**	/
RMC 12.2k	22.81	22.5	22.5	22±1	22.52	22.62	22.83	22±1
HSDPA Subtest-1	21.17	21.31	21.56	21±1	21.6	21.37	21.81	21.5±1
HSDPA Subtest-2	21.22	21.56	21.65	21±1	21.23	20.93	21.56	21.5±1
HSDPA Subtest-3	21.59	21.23	21.88	21±1	22.12	21.78	21.78	21.5±1
HSDPA Subtest-4	20.94	21.87	21.12	21±1	21.49	21.13	22.06	21.5±1
HSUPA Subtest-1	21.3	21.49	21.77	21.5±1	21.66	21.89	21.8	22±1
HSUPA Subtest-2	21.69	21.66	22.06	21.5±1	21.85	22.26	22.21	22±1
HSUPA Subtest-3	21.45	21.1	21.52	21.5±1	21.96	22.07	21.62	22±1
HSUPA Subtest-4	20.89	21.78	21.29	21.5±1	21.23	21.49	21.59	22±1
HSUPA Subtest-5	21.47	21.05	21.58	21.5±1	21.03	22.18	22.23	22±1

WIFI Mode (2.4G)

Mode	Channel number	Frequency (MHz)	Data rate(Mbps)	Average Output Power(dBm)	Average Tune up limited(dBm)
802.11b	1	2412	1	9.04	8.5±1
	6	2437	1	9.07	8.5±1
	11	2462	1	9.38	8.5±1
802.11g	1	2412	6	9.41	8.5±1
	6	2437	6	9.28	8.5±1
	11	2462	6	9.28	8.5±1
802.11n(HT20)	1	2412	MCS0	9.05	8.5±1
	6	2437	MCS0	9.46	8.5±1
	11	2462	MCS0	9.32	8.5±1
802.11n(HT40)	3	2422	MCS0	9.05	8.5±1
	6	2437	MCS0	9.38	8.5±1
	9	2452	MCS0	9.32	8.5±1

Bluetooth Measurement Result

Mode	Frequency (MHz)	Output Power(dBm)	Tune up limited(dBm)
GFSK	2402	3.61	3.5±1
	2441	4.12	3.5±1
	2480	3.85	3.5±1
π/4DQPSK	2402	3.17	3.5±1
	2441	3.76	3.5±1
	2480	3.49	3.5±1
8DPSK	2402	3.54	3.5±1
	2441	4.06	3.5±1
	2480	3.84	3.5±1

BLE Measurement Result

Channel number	Frequency (MHz)	Output Power(dBm)	Tune up limited(dBm)
0	2402	-4.02	-4.0±1
19	2440	-3.61	-4.0±1
39	2480	-4.15	-4.0±1

Note: 1. Both WIFI and BT power was test and only Maximum Power was provide here.
2. SAR Test Exclusion Threshold for WIFI&BT is about 9.6mW, the maximum tune up power of WIFI is 9.5dBm=8.91mW, BT is 4.5dBm=2.82mW, no stand-alone SAR is required.

11 EXPOSURE CONDITIONS CONSIDERATION

EUT antenna location:

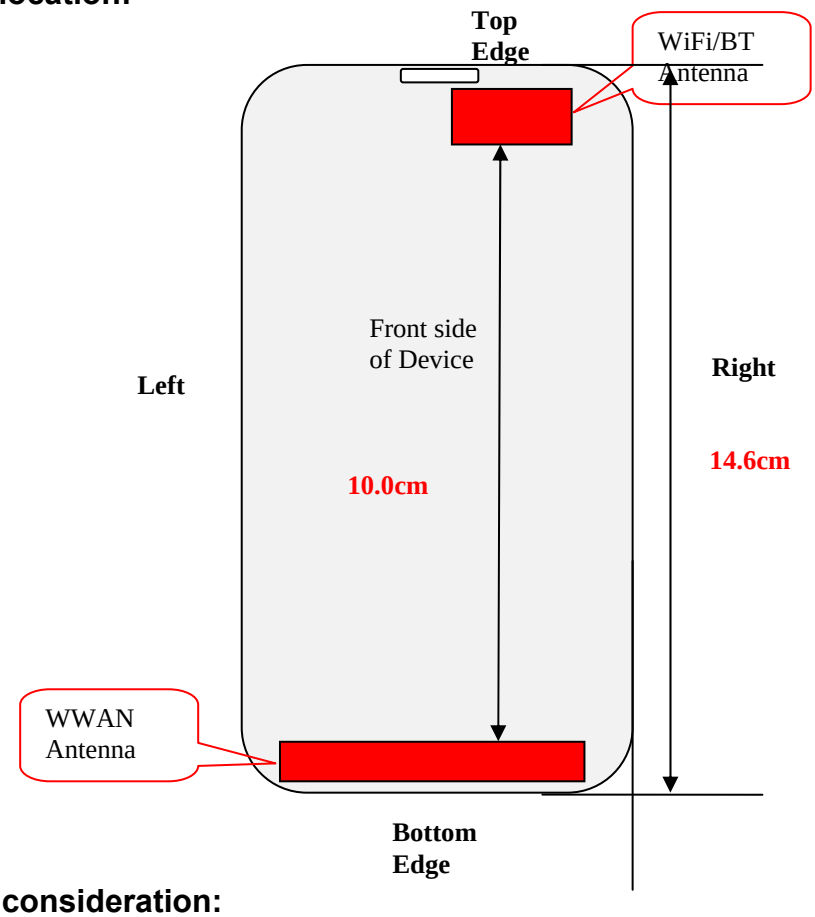

Test position consideration:

Distance of EUT antenna-to-edge/surface(mm), Test distance:10mm						
Antennas	Back side	Front side	Left Edge	Right Edge	Top Edge	Bottom Edge
WWAN	2	6	2	7	130	2
WLAN	2	6	28	15	3	133
Bluetooth	2	6	28	15	3	133

Test distance:10mm						
Antennas	Back side	Front side	Left Edge	Right Edge	Top Edge	Bottom Edge
WWAN	YES	YES	YES	YES	NO	YES
WLAN	NO	NO	NO	NO	NO	NO
Bluetooth	NO	NO	NO	NO	NO	NO

Note:
1. Head/Body-worn/Hotspot mode SAR assessments are required.
2. Referring to KDB 941225 D06v02, when the overall device length and width are ≥ 9cm * 5cm, the test distance is 10mm. SAR must be measured for all sides and surfaces with a transmitting antenna located within 25mm from that surface or edge.
3. Per KDB 447498 D01v05r02, for handsets the test separation distance is determined by the smallest distance between
the outer surface of the device and the user, which is 0 mm for head SAR, 10 mm for hotspot SAR, and 10 mm for body-worn SAR.

12 SAR TEST RESULTS

Test Condition:

1. SAR Measurement
   The distance between the EUT and the antenna of the emulator is more than 50 cm and the output power radiated from the emulator antenna is at least 30 dB less than the output power of EUT.

2	Environmental Conditions	Temperature	23°C
		Relative Humidity	57%
		Atmospheric Pressure	1019mbar

3 Test Date : June 25,2015- June 26,2015
Tested By : Damon Wang

Test Procedures:

1. Establish communication link between EUT and base station emulation by air link.
2. Consider the SAR test reduction per FCC KDB guide line. For GSM/GPRS/EGPRS, set EUT into highest output power channel with test mode which has the maximum source-based time-averaged burst power listed in power table. If the source-based time-average output power for each data mode of EGPRS is lower than that in normal GPRS mode, then testing under EGPRS mode is not necessary.
3. Place the EUT in the selected test position. (Cheek, tilt or flat)
4. Perform SAR testing at highest output power channel under the selected test mode. If the measured 1-g SAR is ≤ 0.8 W/kg, then testing for the other channel will not be performed.
5. When SAR is<0.8W/kg, no repeated SAR measurement is required

SAR measurement system will proceed the following basic steps:

1. Initial power reference measurement
2. Area Scan
3. Zoom Scan
4. Power drift measurement

SAR Summary Test Result:

GSM850:

Date of Measured : June 25th,2015					Hotspot/Body-Worn Separation of Distance: 10mm			
Position	Channel	Mode	SAR 1g(W/kg)	Limit (W/kg)	Power Drift (%)	Maximum Turn-up Power(dBm)	measured output power (dBm)	Scaled Maximum SAR(W/kg)
Right Head Cheek	Mid	Voice call	0.100	1.6	2.12	33	32.42	0.11
Right Head Tilt	Mid	Voice call	0.049	1.6	2.33	33	32.42	0.06
Left Head Cheek	Mid	Voice call	0.085	1.6	-2.17	33	32.42	0.10
Left Head Tilt	Mid	Voice call	0.042	1.6	0.91	33	32.42	0.05
Body Front side	Mid	GPRS Class12	0.167	1.6	-2.12	30	29.12	0.20
Body Back-side	Mid	GPRS Class12	0.383	1.6	1.33	30	29.12	0.47
Body Right EDGE	Mid	GPRS Class12	0.153	1.6	0.11	30	29.12	0.19
Body Left EDGE	Mid	GPRS Class12	0.106	1.6	0.93	30	29.12	0.13
Body Bottom EDGE	Mid	GPRS Class12	0.041	1.6	-0.76	30	29.12	0.05

PCS1900:

Date of Measured : June 25th,2015					Hotspot/Body-Worn Separation of Distance: 10mm			
Position	Channel	Mode	SAR 1g(W/kg)	Limit (W/kg)	Power Drift (%)	Maximum Turn-up Power(dBm)	measured output power (dBm)	Scaled Maximum SAR(W/kg)
Right Head Cheek	Mid	Voice call	0.171	1.6	-2.46	30	29.43	0.19
Right Head Tilt	Mid	Voice call	0.059	1.6	00.21	30	29.43	0.07
Left Head Cheek	Mid	Voice call	0.391	1.6	0.72	30	29.43	0.45
Left Head Tilt	Mid	Voice call	0.039	1.6	0.81	30	29.43	0.04
Body Front side	Mid	GPRS Class12	0.383	1.6	1.02	27	26	0.48
Body Back-side	Mid	GPRS Class12	0.392	1.6	0.02	27	26	0.49
Body Right EDGE	Mid	GPRS Class12	0.110	1.6	3.55	27	26	0.14
Body Left EDGE	Mid	GPRS Class12	0.243	1.6	-2.91	27	26	0.31
Body Bottom EDGE	Mid	GPRS Class12	0.734	1.6	-0.74	27	26	0.92

WCDMA BAND Ⅴ:

Date of Measured : June 26th,2015					Hotspot/Body-Worn Separation of Distance: 10mm			
Position	Channel	Mode	SAR 1g(W/kg)	Limit (W/kg)	Power Drift (%)	Maximum Turn-up Power(dBm)	measured output power (dBm)	Scaled Maximum SAR(W/kg)
Right Head Cheek	Mid	RMC 12.2kbps	0.095	1.6	0.57	23	22.62	0.10
Right Head Tilt	Mid	RMC 12.2kbps	0.039	1.6	-0.89	23	22.62	0.04
Left Head Cheek	Mid	RMC 12.2kbps	0.078	1.6	0.76	23	22.62	0.09
Left Head Tilt	Mid	RMC 12.2kbps	0.037	1.6	0.80	23	22.62	0.04
Body Front side	Mid	RMC 12.2kbps	0.093	1.6	-0.55	23	22.62	0.10
Body Back-side	Mid	RMC 12.2kbps	0.207	1.6	0.20	23	22.62	0.23
Body Right EDGE	Mid	RMC 12.2kbps	0.096	1.6	0.29	23	22.62	0.10
Body Left EDGE	Mid	RMC 12.2kbps	0.056	1.6	-0.66	23	22.62	0.06
Body Bottom EDGE	Mid	RMC 12.2kbps	0.022	1.6	-1.63	23	22.62	0.02

WCDMA BAND Ⅱ:

Date of Measured : June 26th,2015					Hotspot/Body-Worn Separation of Distance: 10mm			
Position	Channel	Mode	SAR 1g(W/kg)	Limit (W/kg)	Power Drift (%)	Maximum Turn-up Power(dBm)	measured output power (dBm)	Scaled Maximum SAR(W/kg)
Right Head Cheek	Mid	RMC 12.2kbps	0.274	1.6	0.88	23	22.5	0.31
Right Head Tilt	Mid	RMC 12.2kbps	0.078	1.6	2.17	23	22.5	0.09
Left Head Cheek	Mid	RMC 12.2kbps	0.697	1.6	0.38	23	22.5	0.78
Left Head Tilt	Mid	RMC 12.2kbps	0.074	1.6	-3.53	23	22.5	0.08
Body Front side	Mid	RMC 12.2kbps	0.559	1.6	-0.07	23	22.5	0.63
Body Back-side	Mid	RMC 12.2kbps	0.686	1.6	1.17	23	22.5	0.77
Body Right EDGE	Mid	RMC 12.2kbps	0.227	1.6	-0.70	23	22.5	0.25
Body Left EDGE	Mid	RMC 12.2kbps	0.441	1.6	-0.34	23	22.5	0.49
Body Bottom EDGE	Mid	RMC 12.2kbps	0.753	1.6	-0.54	23	22.5	0.84

Note: 1. KDB941225 D01-Body SAR is not required for HSDPA when the average output of each RF channel with HSDPA active is less than 0.25dB higher than measured without HSDPA using 12.2kbps RMC or the maximum SAR for 12.2kbps RMC<75% of the SAR limit.

2. KDB941225 D01-Body SAR is not required for handset with HSPA capabilities when the maximum average output of each RF channel with HSUPA/HSDPA active is less than 0.25dB higher than that measure without HSUPA/HSDPA using 12.2kbps RMC AND THE maximum SAR for 12.2kbps RMC is<75% of the SAR limit

Measurement variability consideration

According to KDB 865664 D01v01 section 2.8.1, repeated measurements are required following the procedures as below:

1. Repeated measurement is not required when the original highest measured SAR is < 0.80W/kg; steps 2) through 4) do not apply.
2. When the original highest measured SAR is ≥ 0.80 W/kg, repeat that measurement once.
3. Perform a second repeated measurement only if the ratio of largest to smallest SAR for the original and first repeated measurements is > 1.20 or when the original or repeated measurement is ≥ 1.45 W/kg (~ 10% from the 1-g SAR limit).
4. Perform a third repeated measurement only if the original, first or second repeated measurement is ≥ 1.5 W/kg and the ratio of largest to smallest SAR for the original, first and second repeated measurements is > 1.20.
   Measured SAR (W/Kg)

No repeated SAR

Simultaneous Transmission SAR Analysis.

No.	Applicable Simultaneous Transmission Combination
1.	WWAN+BT
2.	WWAN+WIFI

Note:

1. For simultaneous transmission analysis, WiFi and Bluetooth SAR is estimated per KDB 447498 D01 v05 base on the formula below:
   - (*max. power of channel, including tune-up tolerance, mW*)/(*min. test separation distance, mm*)]·[$\sqrt{f_{(GHz)}}/x$] W/kg for *test separation distances* ≤ 50 mm;

     where x = 7.5 for 1-g SAR, and x = 18.75 for 10-g SAR.
   - 0.4 W/kg for 1-g SAR and 1.0 W/kg for 10-g SAR, when the *test separation distances* is > 50 mm.[21]
2. If the test separation distances is≤5mm, 5mm is used for estimated SAR calculation.
3. WIFI maximum tune up power is 9.5dBm, BT's maximum tune up power is 1.5dBm and the estimated SAR is listed below.

Test position	Head(0cm)	Body-worn(1.0cm)
WIFI Estimated SAR(W/kg)	0.37	0.19
BT Estimated SAR(W/kg)	0.12	0.06

Maximum Summation:

	WWAN	WIFI	BT	WWAN+WIFI	WWAN+BT
position	Max. Scaled SAR	Max. Scaled SAR	Max. Scaled SAR		
Head 0cm	0.78	0.37	0.12	1.15	0.90
Body 1.0cm	0.92	0.19	0.06	1.11	0.98

Note: 1g-SAR scalar summation<1.6W/kg, so no simultaneous SAR is required.

13 SAR MEASUREMENT REFERENCES

References

1. **FCC 47 CFR Part 2 "Frequency Allocations and Radio Treaty Matters; General Rules and Regulations"**
2. **IEEE Std. C95.1-1991, "IEEE Standard for Safety Levels with Respect to Human Exposure to Radio Frequency Electromagnetic Fields, 3kHz to 300GHz", 1991**
3. **IEEE Std. 1528-2013, "IEEE Recommended Practice for Determining the Peak Spatial-Average**
   Specific Absorption Rate (SAR) in the Human Head from Wireless Communications Devices:
   Measurement Techniques", June 2013
4. **IEC 62209-2, "Human exposure to radio frequency fields from hand-held and body-mounted wireless communication devices—Human models, instrumentation, and procedures – Part 2: Procedure to determine the specific absorption rate(SAR) for wireless communication devices used in close proximity to the human body(frequency range of 30MHz to 6GHz)", April 2010**
5. **FCC KDB 447498 D01 v05r02, "Mobile and Portable Device RF Exposure Procedures and Equipment Authorization Policies", Feb 7th, 2014**
6. **FCC KDB 941225 D04 v01, "Evaluation SAR for GSM/(E)GPRS Dual Transfer Mode", January 27 2010**
7. **FCC KDB 941225 D03 v01, "Evaluation SAR Test Reduction Procedures for GSM/GPRS/EDGE", December 2008**
8. **FCC KDB 865664 D01, "SAR Measurement Requirements 100MHz to 6GHz", Feb 7th, 2014**
9. **FCC KDB648474 D04, SAR Evaluation Considerations for Wireless Handsets. Dec 4th, 2013**
10. **FCC KDB 941225 D06 V02, SAR Evaluation Procedures for Portable Devices with Wireless Router Capabilities, Oct 16th, 2014.**

Maxmum SAR measurement Plots

Test Mode:GSM850MHz, Mid channel (Right Head Cheek)
Product Description:Smart Phone
Model:Z51
Test Date:June 25th,2015

Medium(liquid type)	HSL_850
Frequency (MHz)	836.40000
Relative permittivity (real part)	41.76
Conductivity (S/m)	0.88
Crest Factor	8.0
E-Field Probe	SN 07/15 EP246
Conversion Factor	4.66
Area Scan	dx=8mm dy=8mm
Zoom Scan	5x5x7,dx=8mm dy=8mm dz=5mm
Variation (%)	2.12
SAR 10g (W/Kg)	0.074799
SAR 1g (W/Kg)	0.100087

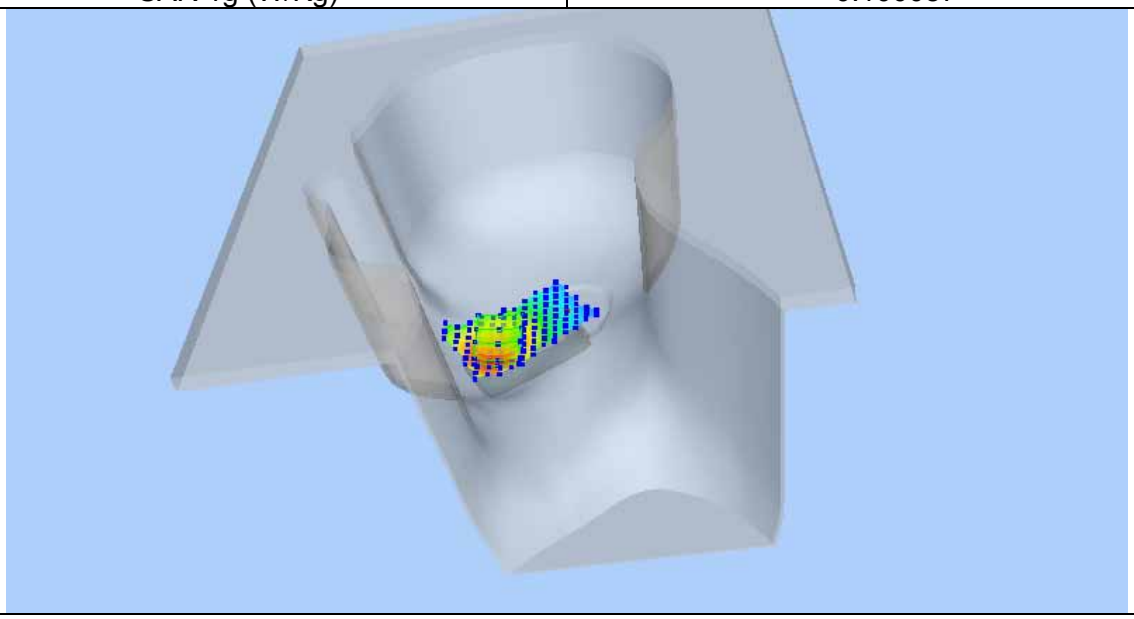

Test Mode:GSM850MHz, Mid channel (Right Head , Tilt)
Product Description:Smart Phone
Model:Z51
Test Date:June 25th,2015

Medium(liquid type)	HSL_850
Frequency (MHz)	836.40000
Relative permittivity (real part)	41.76
Conductivity (S/m)	0.88
Crest Factor	8.0
E-Field Probe	SN 07/15 EP246
Conversion Factor	4.66
Area Scan	dx=8mm dy=8mm
Zoom Scan	5x5x7,dx=8mm dy=8mm dz=5mm
Variation (%)	2.33
SAR 10g (W/Kg)	0.037415
SAR 1g (W/Kg)	0.048909

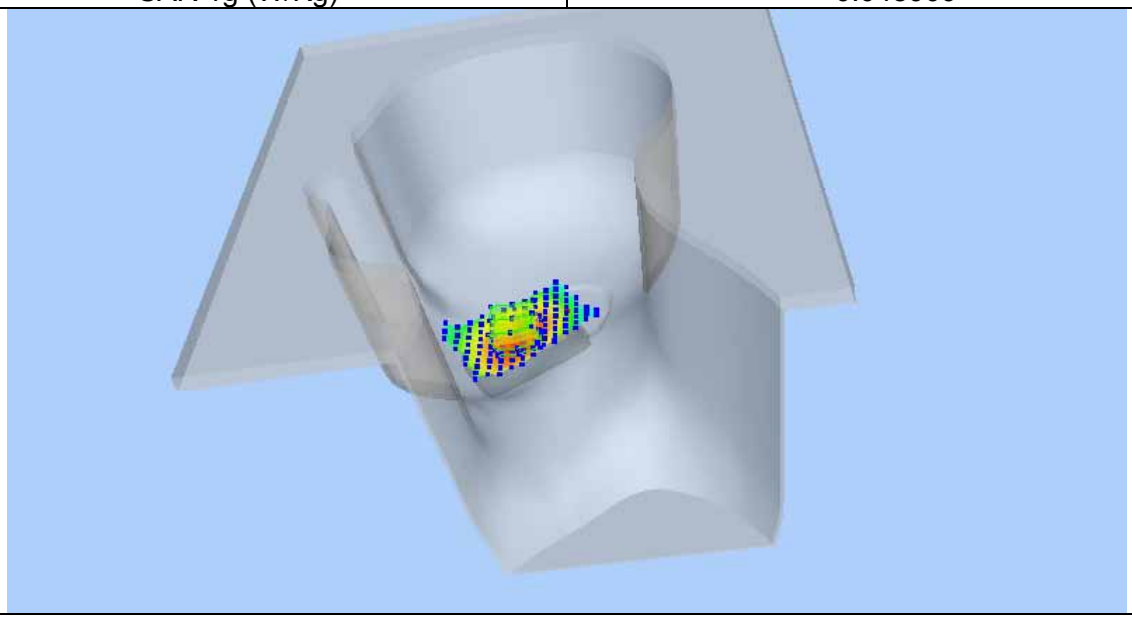

Test Mode:GSM850MHz, Mid channel (Left Head , Cheek)
Product Description:Smart Phone
Model:Z51
Test Date:June 25th,2015

Medium(liquid type)	HSL_850
Frequency (MHz)	836.40000
Relative permittivity (real part)	41.76
Conductivity (S/m)	0.88
Crest Factor	8.0
E-Field Probe	SN 07/15 EP246
Conversion Factor	4.66
Area Scan	dx=8mm dy=8mm
Zoom Scan	5x5x7,dx=8mm dy=8mm dz=5mm
Variation (%)	-2.17
SAR 10g (W/Kg)	0.063863
SAR 1g (W/Kg)	0.085305

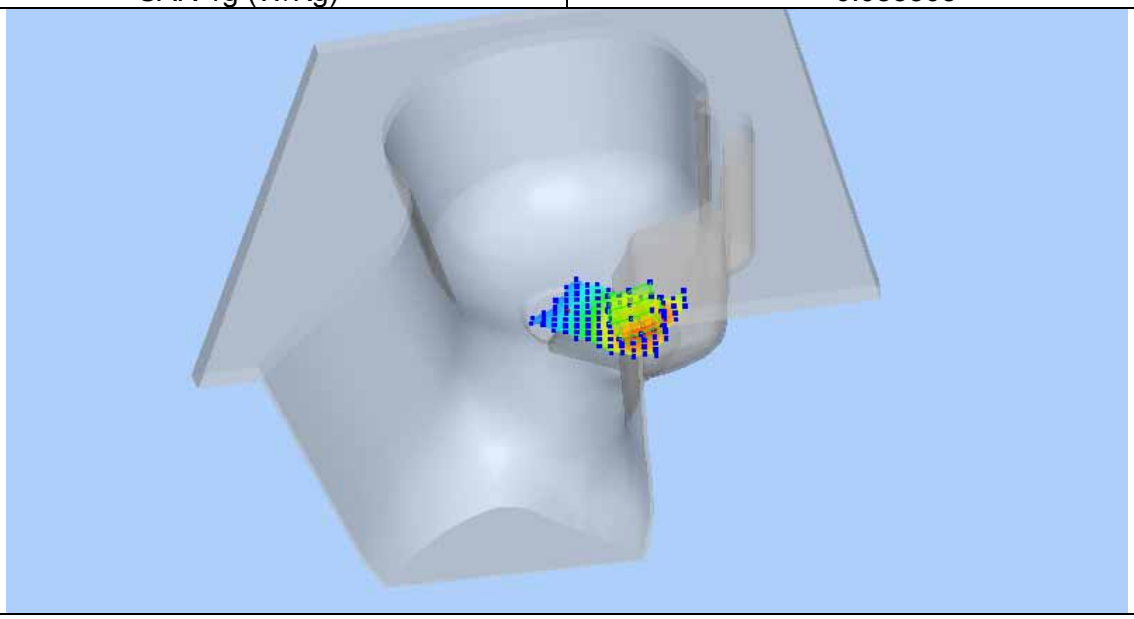

Test Mode:GSM850MHz, Mid channel (Left Head , Tilt)
Product Description:Smart Phone
Model:Z51
Test Date:June 25th,2015

Medium(liquid type)	HSL_850
Frequency (MHz)	836.60000
Relative permittivity (real part)	41.76
Conductivity (S/m)	0.88
Crest Factor	8.0
E-Field Probe	SN 07/15 EP246
Conversion Factor	4.66
Area Scan	dx=8mm dy=8mm
Zoom Scan	5x5x7,dx=8mm dy=8mm dz=5mm
Variation (%)	0.91
SAR 10g (W/Kg)	0.032078
SAR 1g (W/Kg)	0.042806

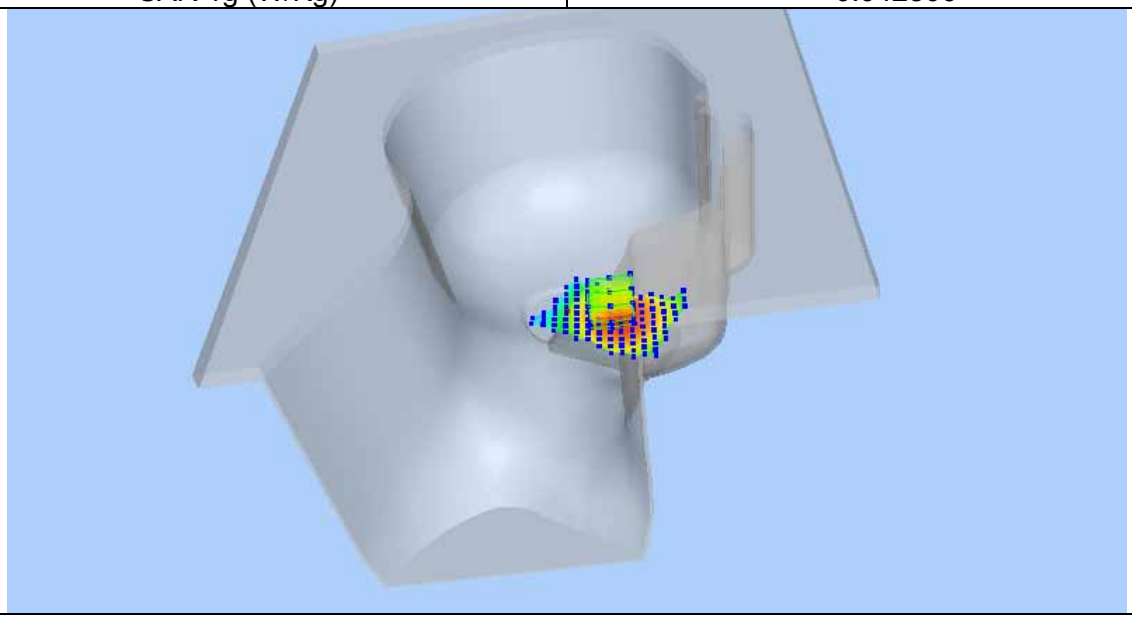

Test Mode:GPRS850MHz, Mid channel (Body, Front Surface)
Product Description:Smart Phone
Model:Z51
Test Date:June 25th,2015

Medium(liquid type)	MSL_850
Frequency (MHz)	836.60000
Relative permittivity (real part)	55.72
Conductivity (S/m)	0.96
Crest Factor	2.0
E-Field Probe	SN 07/15 EP246
Conversion Factor	4.80
Area Scan	dx=8mm dy=8mm
Zoom Scan	5x5x7,dx=8mm dy=8mm dz=5mm
Variation (%)	-2.12
SAR 10g (W/Kg)	0.128484
SAR 1g (W/Kg)	0.167098

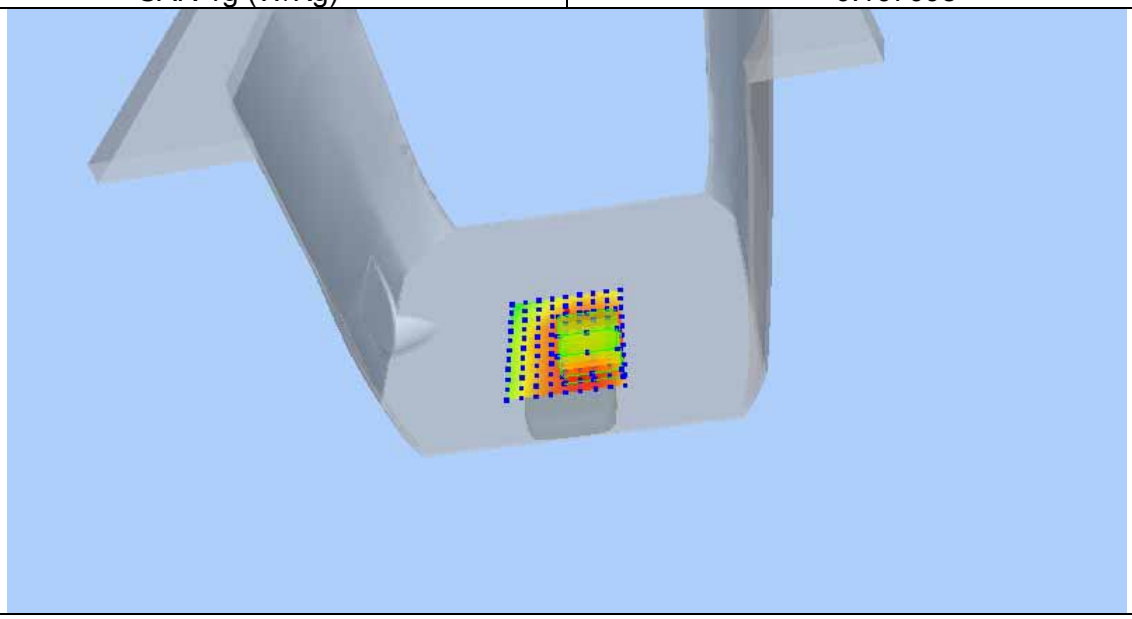

Test Mode:GPRS850MHz, Mid channel(Body, Back Surface)
Product Description:Smart Phone
Model:Z51
Test Date:June 25th,2015

Medium(liquid type)	MSL_850
Frequency (MHz)	836.60000
Relative permittivity (real part)	55.72
Conductivity (S/m)	0.96
Crest Factor	2.0
E-Field Probe	SN 07/15 EP246
Conversion Factor	4.80
Area Scan	dx=8mm dy=8mm
Zoom Scan	5x5x7,dx=8mm dy=8mm dz=5mm
Variation (%)	1.33
SAR 10g (W/Kg)	0.287972
SAR 1g (W/Kg)	0.382813

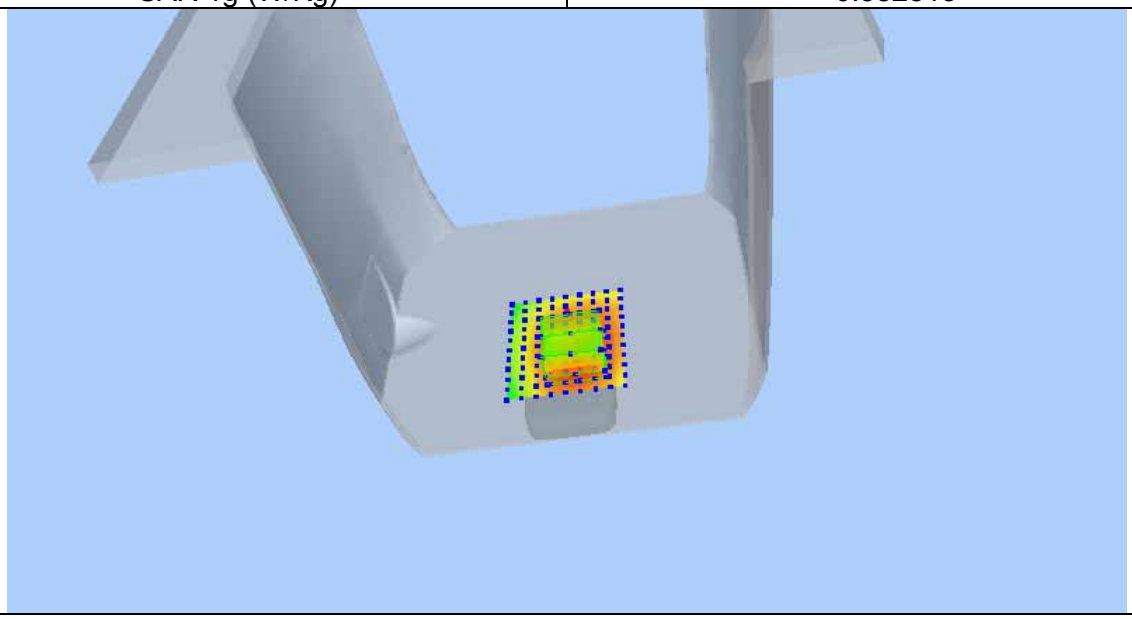

Test Mode:GPRS850MHz, Mid channel (Body, Right Edge)
Product Description:Smart Phone
Model:Z51
Test Date:June 25th,2015

Medium(liquid type)	MSL_850
Frequency (MHz)	836.60000
Relative permittivity (real part)	55.72
Conductivity (S/m)	0.96
Crest Factor	2.0
E-Field Probe	SN 07/15 EP246
Conversion Factor	4.80
Area Scan	dx=8mm dy=8mm
Zoom Scan	5x5x7,dx=8mm dy=8mm dz=5mm
Variation (%)	0.11
SAR 10g (W/Kg)	0.108975
SAR 1g (W/Kg)	0.153037

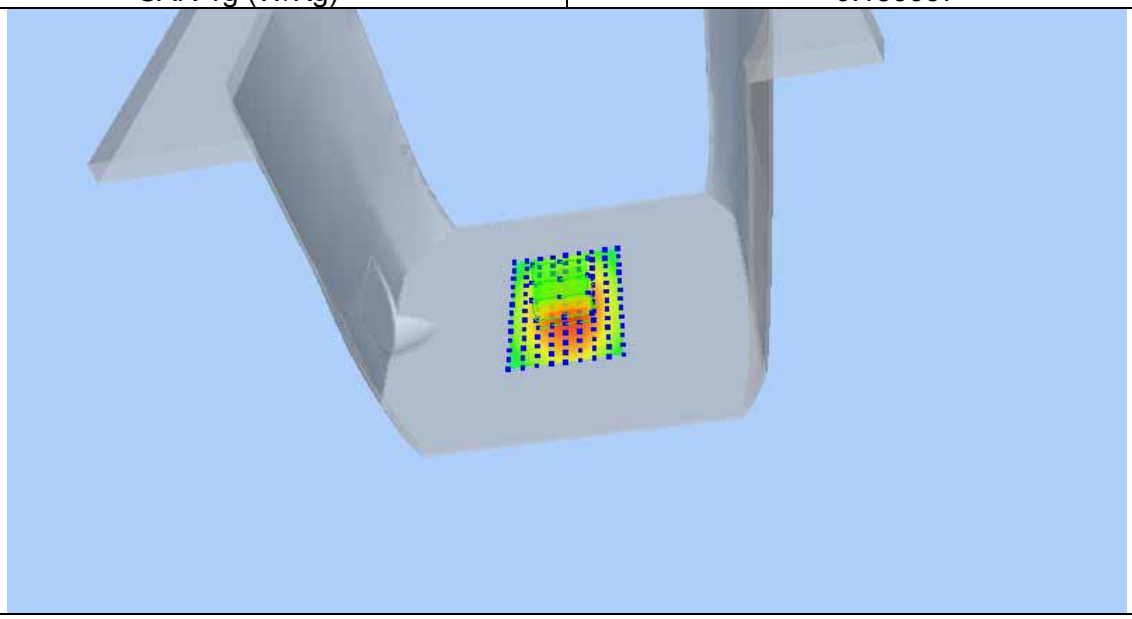

Test Mode:GPRS850MHz, Mid channel (Body, Left Edge)
Product Description:Smart Phone
Model:Z51
Test Date:June 25th,2015

Medium(liquid type)	MSL_850
Frequency (MHz)	836.60000
Relative permittivity (real part)	55.72
Conductivity (S/m)	0.96
Crest Factor	2.0
E-Field Probe	SN 07/15 EP246
Conversion Factor	4.80
Area Scan	dx=8mm dy=8mm
Zoom Scan	5x5x7,dx=8mm dy=8mm dz=5mm
Variation (%)	0.93
SAR 10g (W/Kg)	0.071246
SAR 1g (W/Kg)	0.105852

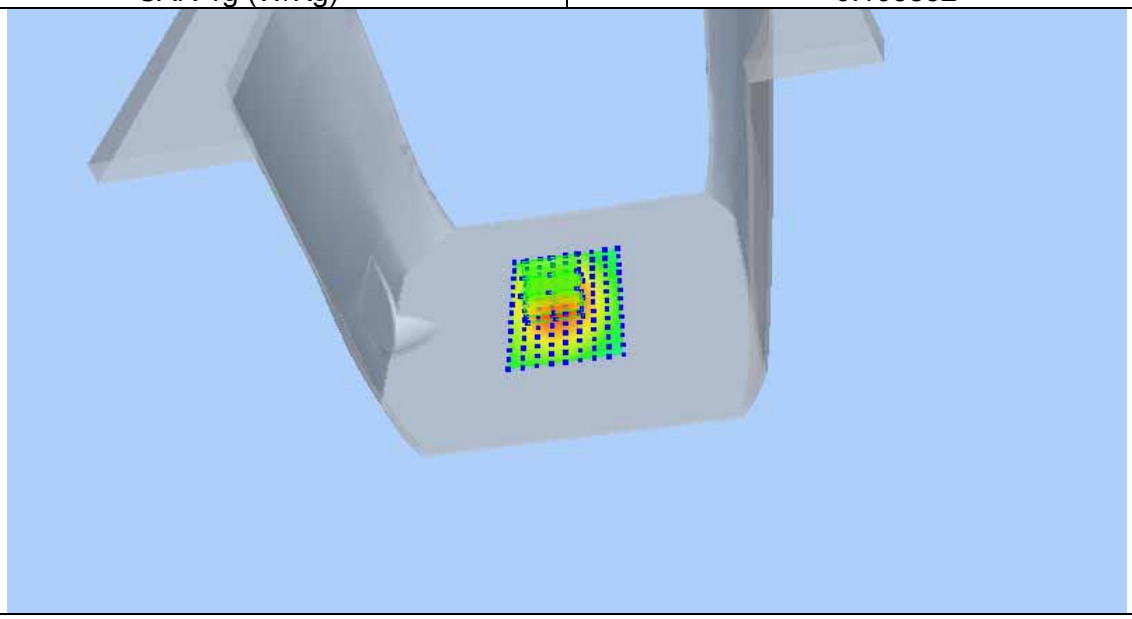

Test Mode:GPRS850MHz, Mid channel (Body, Bottom Edge)
Product Description:Smart Phone
Model:Z51
Test Date:June 25th,2015

Medium(liquid type)	MSL_850
Frequency (MHz)	836.60000
Relative permittivity (real part)	55.72
Conductivity (S/m)	0.96
Crest Factor	2.0
E-Field Probe	SN 07/15 EP246
Conversion Factor	4.80
Area Scan	dx=8mm dy=8mm
Zoom Scan	5x5x7,dx=8mm dy=8mm dz=5mm
Variation (%)	-0.76
SAR 10g (W/Kg)	0.026652
SAR 1g (W/Kg)	0.040783

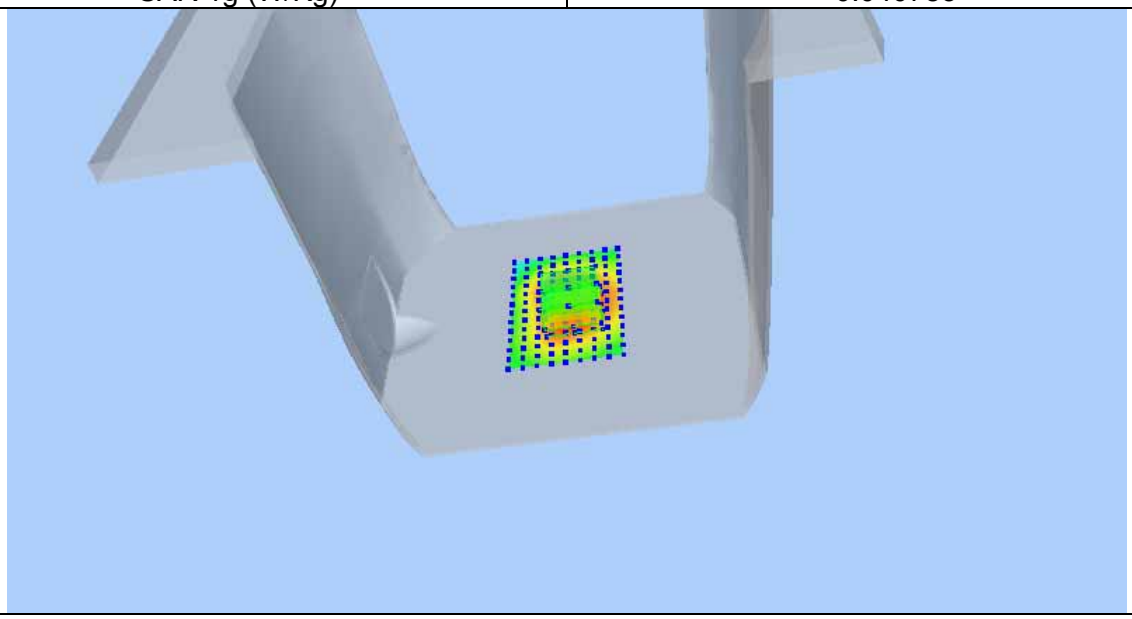

Test mode: WCDMA BAND Ⅴ, Middle channel (Right Head Cheek)
Product Description: Smart Phone
Model: Z51
Test Date: June 25th,2015

Medium(liquid type)	HSL_850
Frequency (MHz)	836.4000
Relative permittivity (real part)	41.76
Conductivity (S/m)	0.88
Crest factor	1.0
E-Field Probe	SN 07/15 EP246
Conversion Factor	4.66
Sensor-Surface	4mm
Area Scan	dx=8mm dy=8mm
Zoom Scan	5x5x7,dx=8mm dy=8mm dz=5mm
Variation (%)	0.57
SAR 10g (W/Kg)	0.071358
SAR 1g (W/Kg)	0.094868

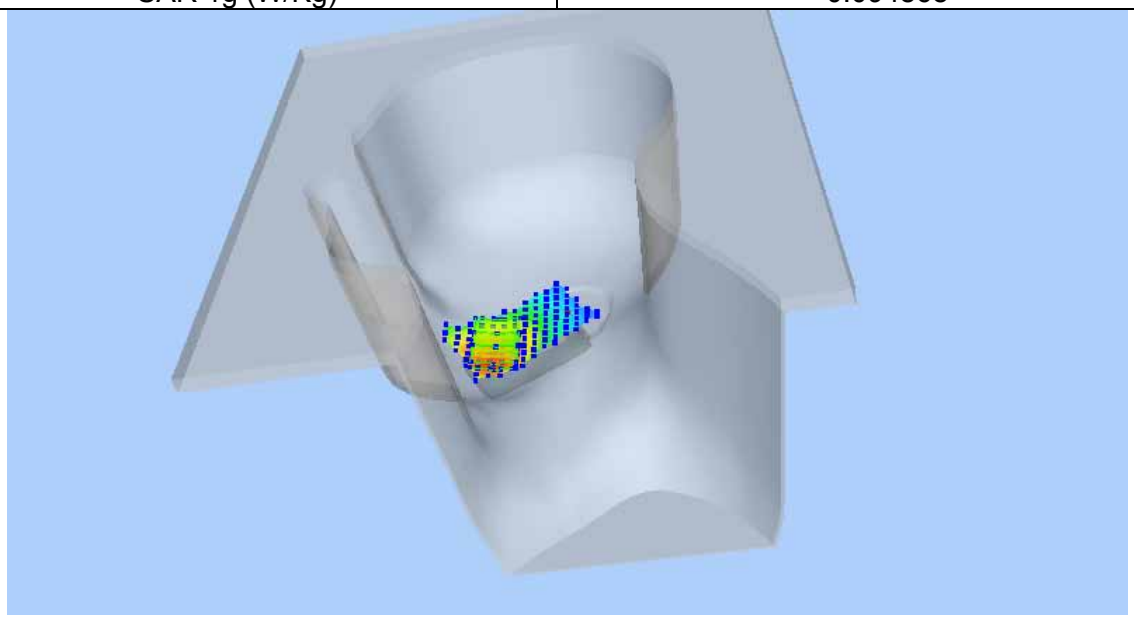

Test mode: WCDMA BAND Ⅴ, Middle channel (Right Head Tilt)
Product Description: Smart Phone
Model: Z51
Test Date:June 25th,2015

Medium(liquid type)	HSL_850
Frequency (MHz)	836.4000
Relative permittivity (real part)	41.76
Conductivity (S/m)	0.88
Crest factor	1.0
E-Field Probe	SN 07/15 EP246
Conversion Factor	4.66
Sensor-Surface	4mm
Area Scan	dx=8mm dy=8mm
Zoom Scan	5x5x7,dx=8mm dy=8mm dz=5mm
Variation (%)	-0.89
SAR 10g (W/Kg)	0.030096
SAR 1g (W/Kg)	0.039639

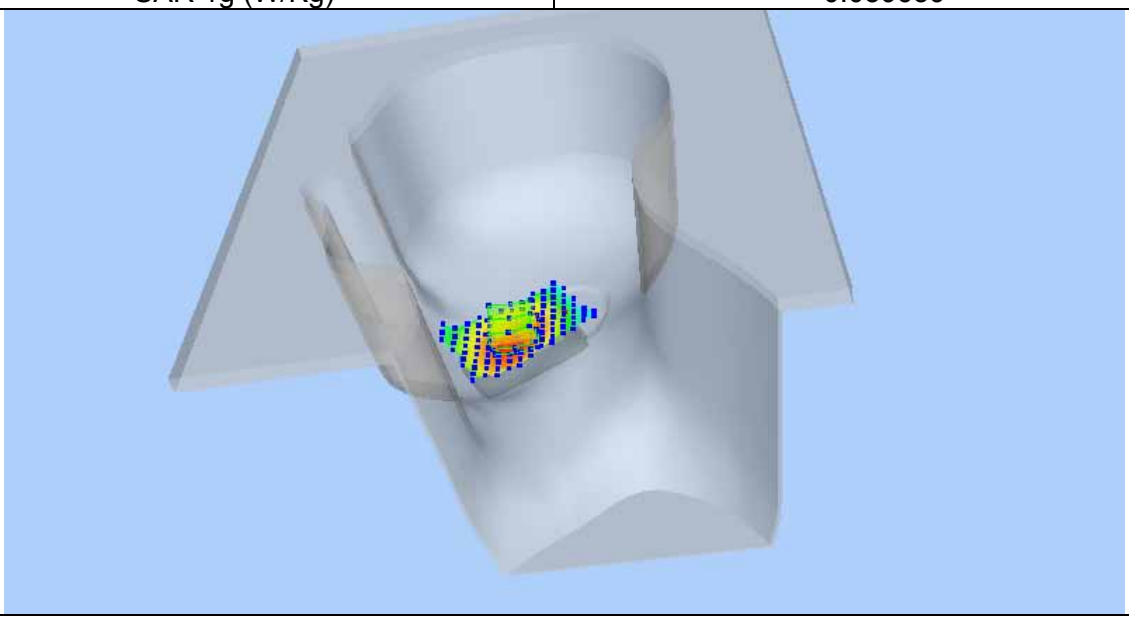

Test mode: WCDMA BAND Ⅴ, Middle channel (Left Head Cheek)
Product Description: Smart Phone
Model: Z51
Test Date:June 25th,2015

Medium(liquid type)	HSL_850
Frequency (MHz)	836.4000
Relative permittivity (real part)	41.76
Conductivity (S/m)	0.88
Crest factor	1.0
E-Field Probe	SN 07/15 EP246
Conversion Factor	4.66
Sensor-Surface	4mm
Area Scan	dx=8mm dy=8mm
Zoom Scan	5x5x7,dx=8mm dy=8mm dz=5mm
Variation (%)	0.76
SAR 10g (W/Kg)	0.059264
SAR 1g (W/Kg)	0.077788

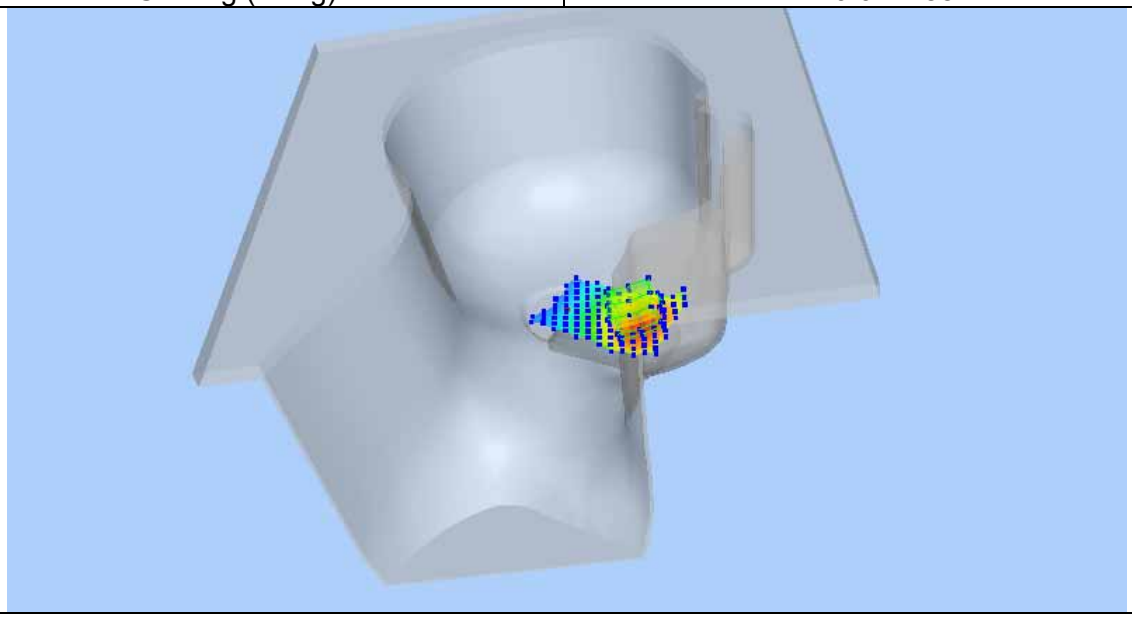

Test mode: WCDMA BAND Ⅴ, Middle channel (Left Head Tilt)
Product Description: Smart Phone
Model: Z51
Test Date:June 25th,2015

Medium(liquid type)	HSL_850
Frequency (MHz)	836.4000
Relative permittivity (real part)	41.76
Conductivity (S/m)	0.88
Crest factor	1.0
E-Field Probe	SN 07/15 EP246
Conversion Factor	4.66
Sensor-Surface	4mm
Area Scan	dx=8mm dy=8mm
Zoom Scan	5x5x7,dx=8mm dy=8mm dz=5mm
Variation (%)	0.80
SAR 10g (W/Kg)	0.028026
SAR 1g (W/Kg)	0.036531

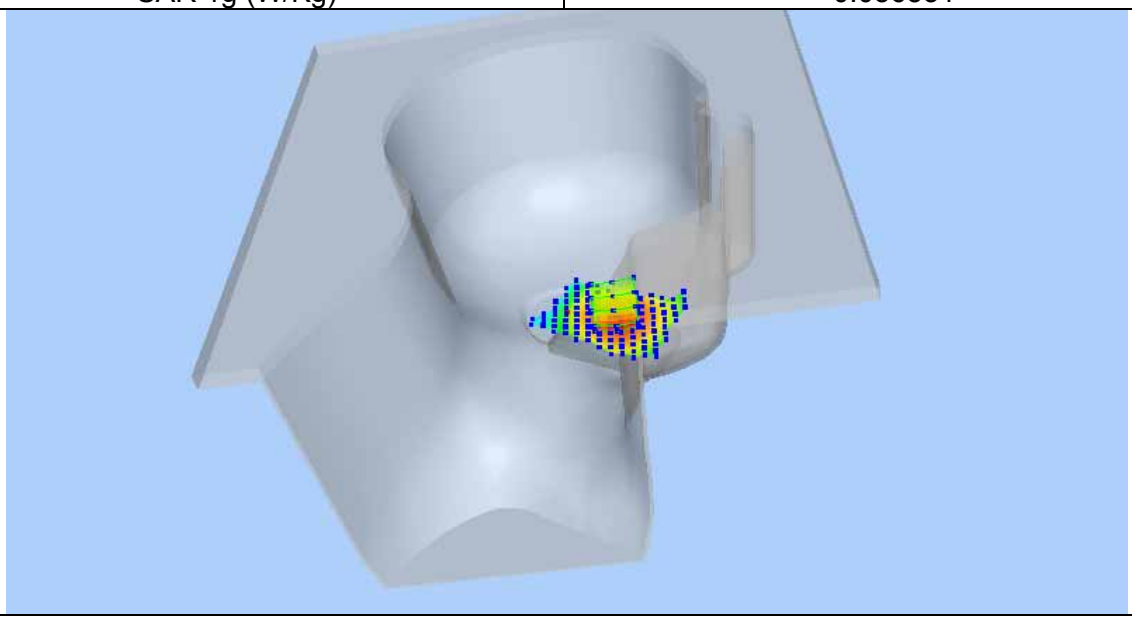

Test mode: WCDMA BAND Ⅴ, Middle channel (Body,Front Surface)
Product Description: Smart Phone
Model: Z51
Test Date:June 25th,2015

Medium(liquid type)	MSL_850
Frequency (MHz)	836.4000
Relative permittivity (real part)	55.72
Conductivity (S/m)	0.96
Crest factor	1.0
E-Field Probe	SN 07/15 EP246
Conversion Factor	4.80
Sensor-Surface	4mm
Area Scan	dx=8mm dy=8mm
Zoom Scan	5x5x7,dx=8mm dy=8mm dz=5mm
Variation (%)	-0.55
SAR 10g (W/Kg)	0.069960
SAR 1g (W/Kg)	0.092789

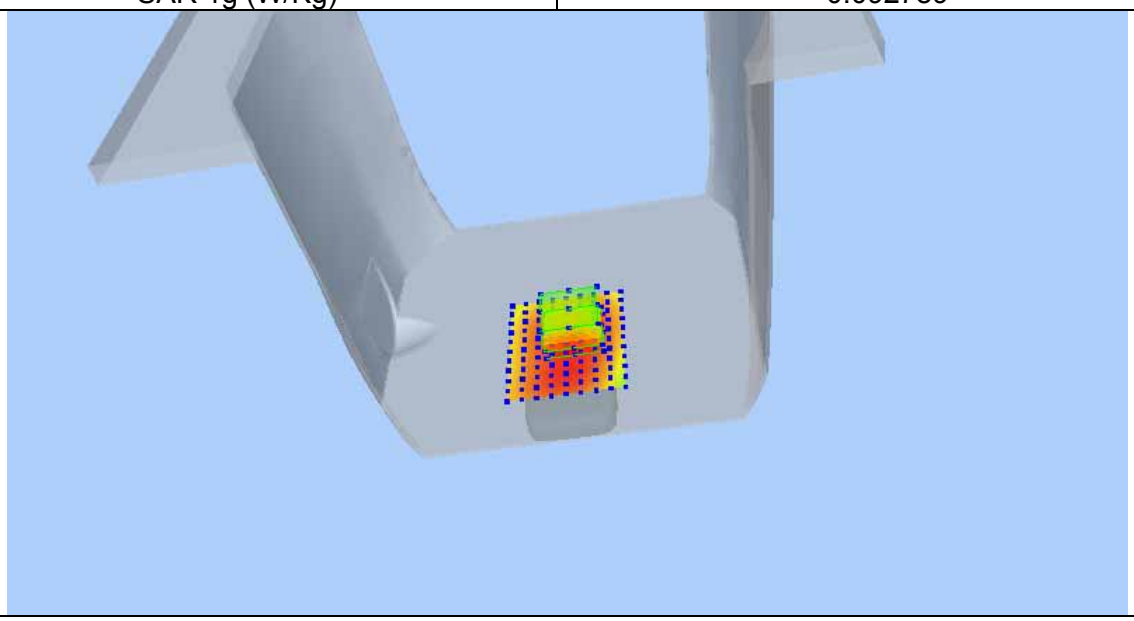

Test mode: WCDMA BAND Ⅴ, Middle channel (Body, Back Surface)
Product Description: Smart Phone
Model: Z51
Test Date:June 25th,2015

Medium(liquid type)	MSL_850
Frequency (MHz)	836.4000
Relative permittivity (real part)	55.72
Conductivity (S/m)	0.96
Crest factor	1.0
E-Field Probe	SN 07/15 EP246
Conversion Factor	4.80
Sensor-Surface	4mm
Area Scan	dx=8mm dy=8mm
Zoom Scan	5x5x7,dx=8mm dy=8mm dz=5mm
Variation (%)	0.20
SAR 10g (W/Kg)	0.154430
SAR 1g (W/Kg)	0.207463

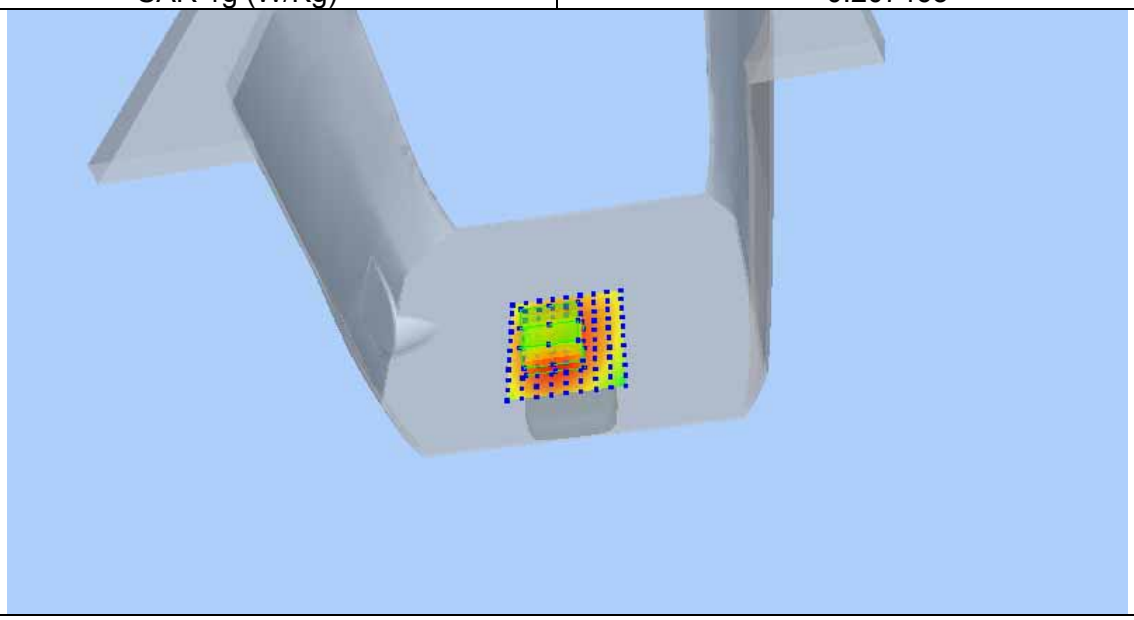

Test mode: WCDMA BAND Ⅴ, Middle channel (Body, Right Edge)
Product Description: Smart Phone
Model: Z51
Test Date:June 25th,2015

Medium(liquid type)	MSL_850
Frequency (MHz)	836.4000
Relative permittivity (real part)	55.72
Conductivity (S/m)	0.96
Crest factor	1.0
E-Field Probe	SN 07/15 EP246
Conversion Factor	4.80
Sensor-Surface	4mm
Area Scan	dx=8mm dy=8mm
Zoom Scan	5x5x7,dx=8mm dy=8mm dz=5mm
Variation (%)	0.29
SAR 10g (W/Kg)	0.066134
SAR 1g (W/Kg)	0.095725

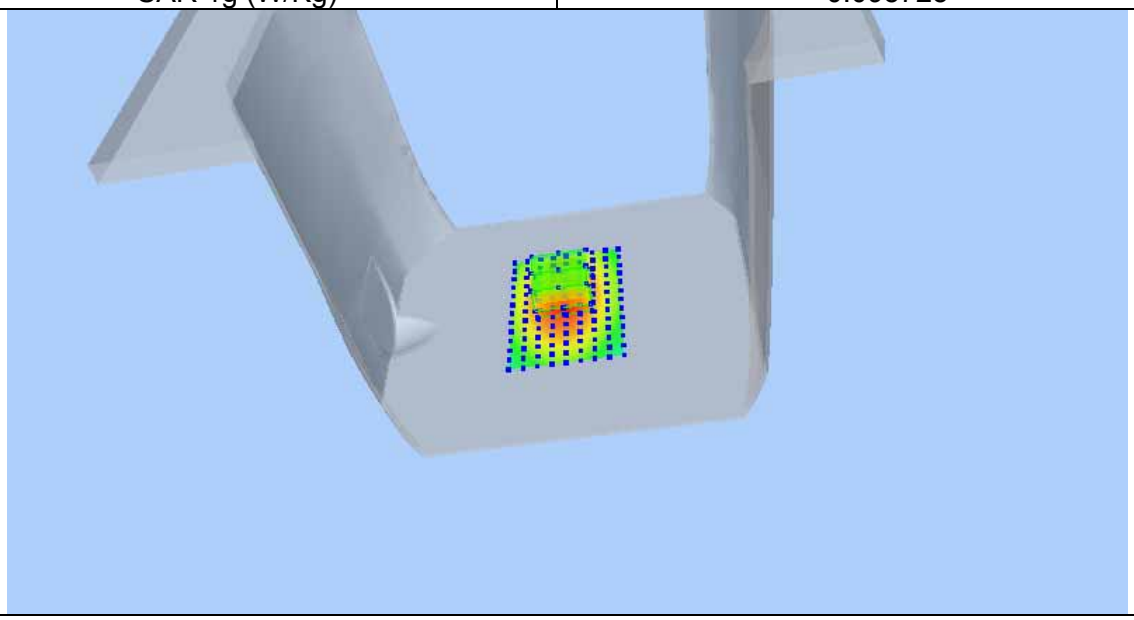

Test mode: WCDMA BAND Ⅴ, Middle channel (Body, Left Edge)
Product Description: Smart Phone
Model: Z51
Test Date:June 25th,2015

Medium(liquid type)	MSL_850
Frequency (MHz)	836.4000
Relative permittivity (real part)	55.72
Conductivity (S/m)	0.96
Crest factor	1.0
E-Field Probe	SN 07/15 EP246
Conversion Factor	4.80
Sensor-Surface	4mm
Area Scan	dx=8mm dy=8mm
Zoom Scan	5x5x7,dx=8mm dy=8mm dz=5mm
Variation (%)	-0.66
SAR 10g (W/Kg)	0.037705
SAR 1g (W/Kg)	0.055678

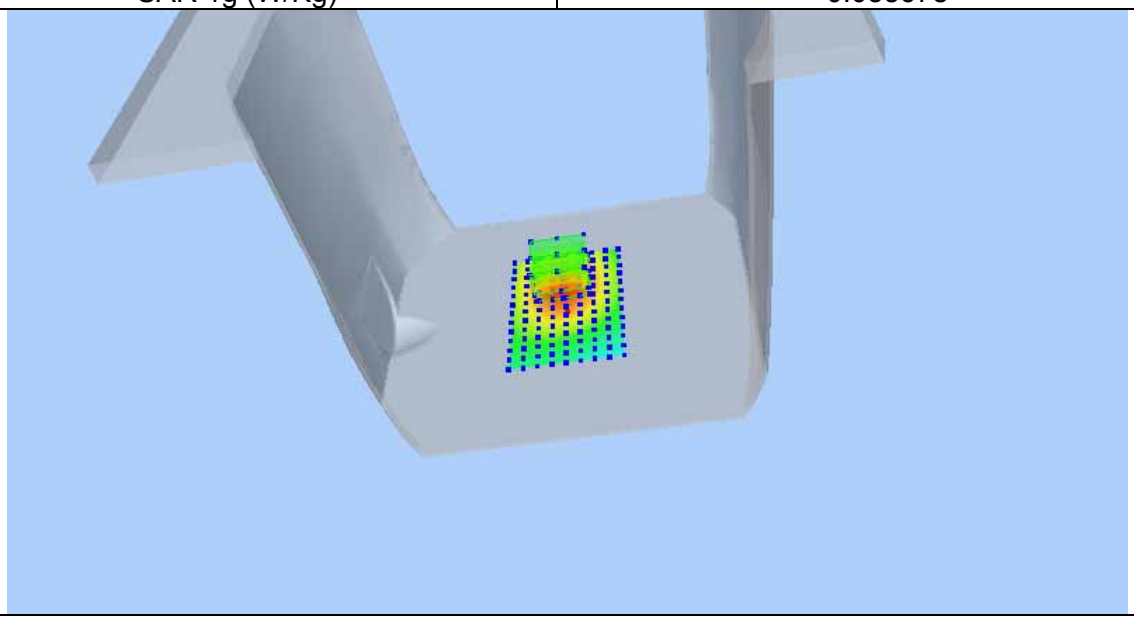

Test mode: WCDMA BAND Ⅴ, Middle channel (Body, Bottom Edge)
Product Description: Smart Phone
Model: Z51
Test Date:June 25th,2015

Medium(liquid type)	MSL_850
Frequency (MHz)	836.4000
Relative permittivity (real part)	55.72
Conductivity (S/m)	0.96
Crest factor	1.0
E-Field Probe	SN 07/15 EP246
Conversion Factor	4.80
Sensor-Surface	4mm
Area Scan	dx=8mm dy=8mm
Zoom Scan	5x5x7,dx=8mm dy=8mm dz=5mm
Variation (%)	-1.63
SAR 10g (W/Kg)	0.014169
SAR 1g (W/Kg)	0.022171

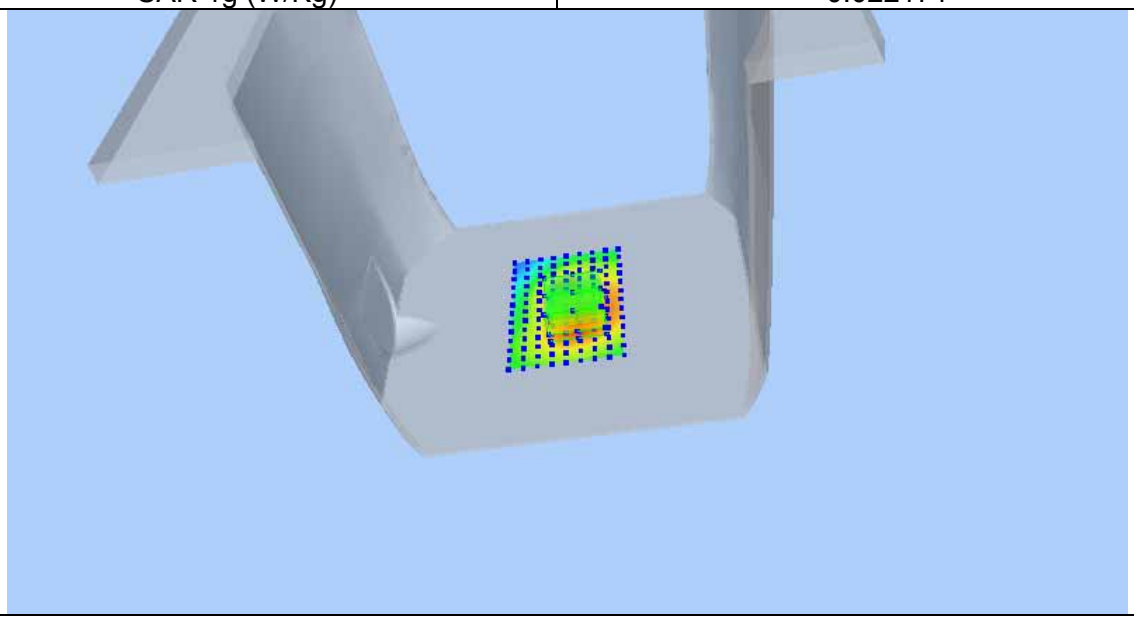

Test mode: GSM1900, Middle channel (Right Head Cheek)
Product Description: Smart Phone
Model: Z51
Test Date:June 26th,2015

Medium(liquid type)	HSL_1900
Frequency (MHz)	1880.0000
Relative permittivity (real part)	40.37
Conductivity (S/m)	1.38
Crest factor	8.0
E-Field Probe	SN 07/15 EP246
Conversion Factor	4.45
Sensor-Surface	4mm
Area Scan	dx=8mm dy=8mm
Zoom Scan	5x5x7,dx=8mm dy=8mm dz=5mm
Variation (%)	-2.46
SAR 10g (W/Kg)	0.104246
SAR 1g (W/Kg)	0.170725

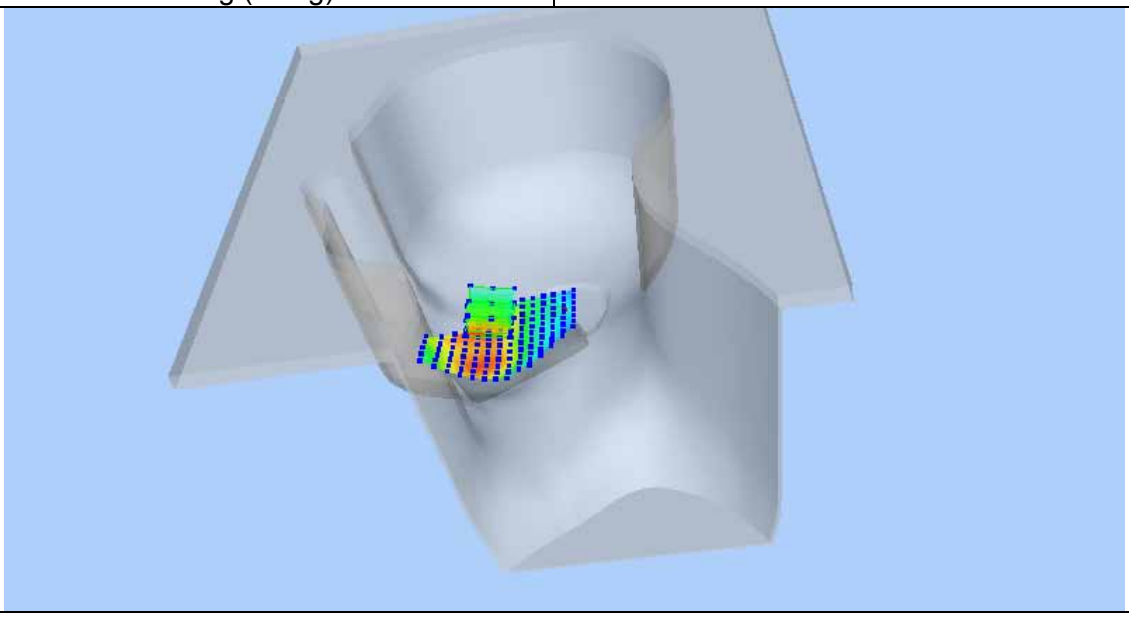

Test mode: GSM1900, Middle channel (Right Head Tilt)
Product Description: Smart Phone
Model: Z51
Test Date:June 26th,2015

Medium(liquid type)	HSL_1900
Frequency (MHz)	1880.0000
Relative permittivity (real part)	40.37
Conductivity (S/m)	1.38
Crest factor	8.0
E-Field Probe	SN 07/15 EP246
Conversion Factor	4.45
Sensor-Surface	4mm
Area Scan	dx=8mm dy=8mm
Zoom Scan	5x5x7,dx=8mm dy=8mm dz=5mm
Variation (%)	0.21
SAR 10g (W/Kg)	0.032920
SAR 1g (W/Kg)	0.058844

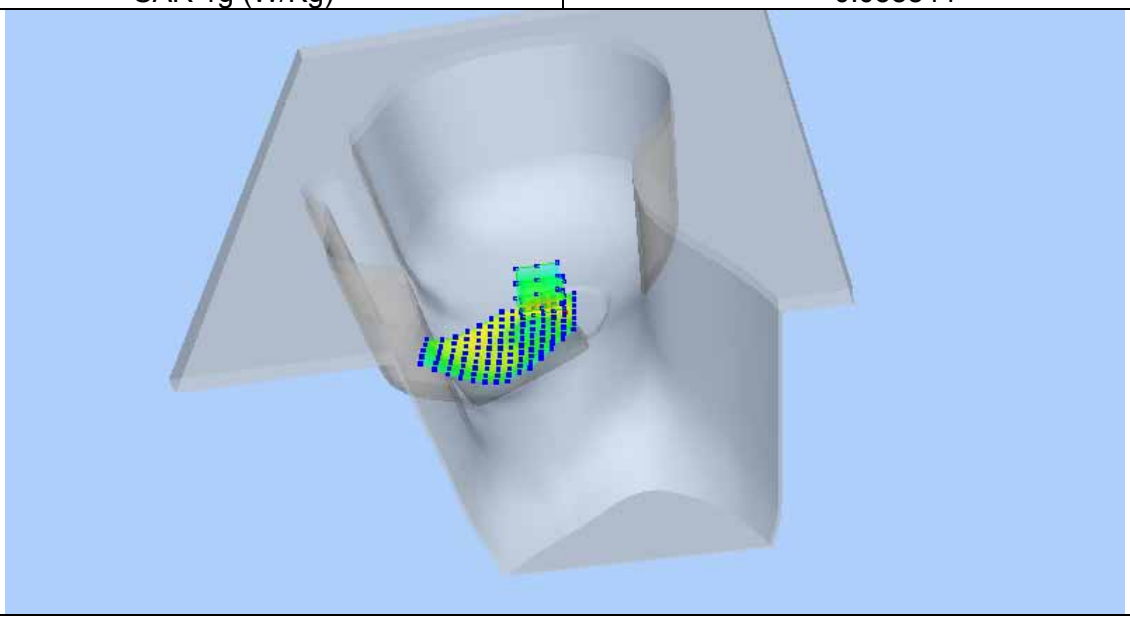

Test mode: GSM1900, Middle channel (Left Head Cheek)
Product Description: Smart Phone
Model: Z51
Test Date:June 26th,2015

Medium(liquid type)	HSL_1900
Frequency (MHz)	1880.0000
Relative permittivity (real part)	40.37
Conductivity (S/m)	1.38
Crest factor	8.0
E-Field Probe	SN 07/15 EP246
Conversion Factor	4.45
Sensor-Surface	4mm
Area Scan	dx=8mm dy=8mm
Zoom Scan	5x5x7,dx=8mm dy=8mm dz=5mm
Variation (%)	0.72
SAR 10g (W/Kg)	0.239426
SAR 1g (W/Kg)	0.390849

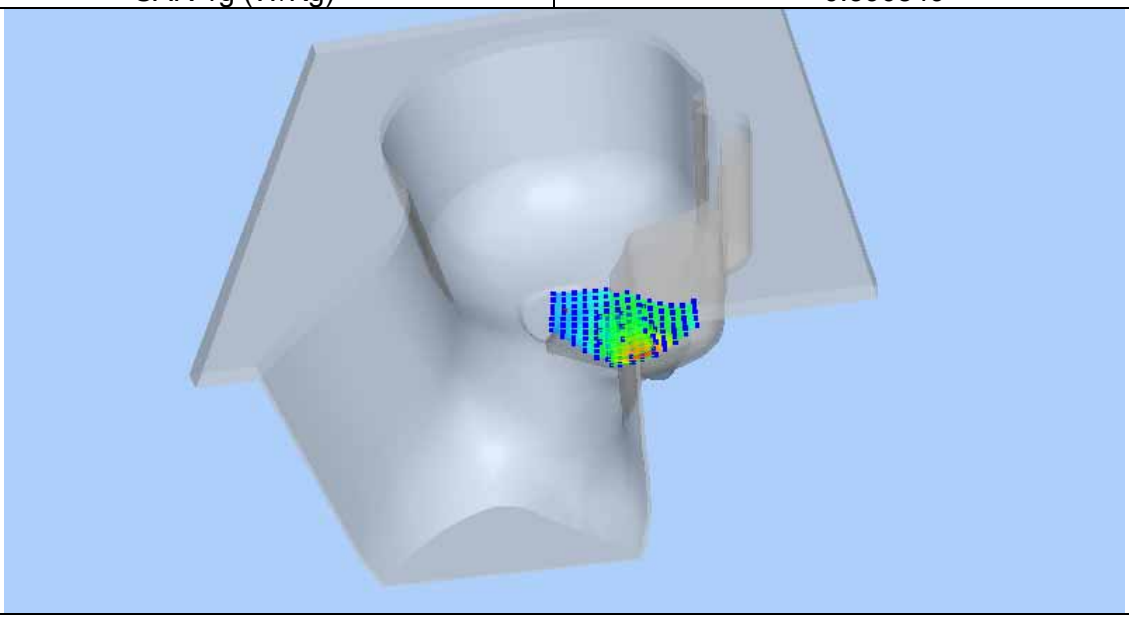

Test mode: GSM1900, Middle channel (Left Head Tilt)
Product Description: Smart Phone
Model: Z51
Test Date:June 26th,2015

Medium(liquid type)	HSL_1900
Frequency (MHz)	1880.0000
Relative permittivity (real part)	40.37
Conductivity (S/m)	1.38
Crest factor	8.0
E-Field Probe	SN 07/15 EP246
Conversion Factor	4.45
Sensor-Surface	4mm
Area Scan	dx=8mm dy=8mm
Zoom Scan	5x5x7,dx=8mm dy=8mm dz=5mm
Variation (%)	0.81
SAR 10g (W/Kg)	0.022629
SAR 1g (W/Kg)	0.039092

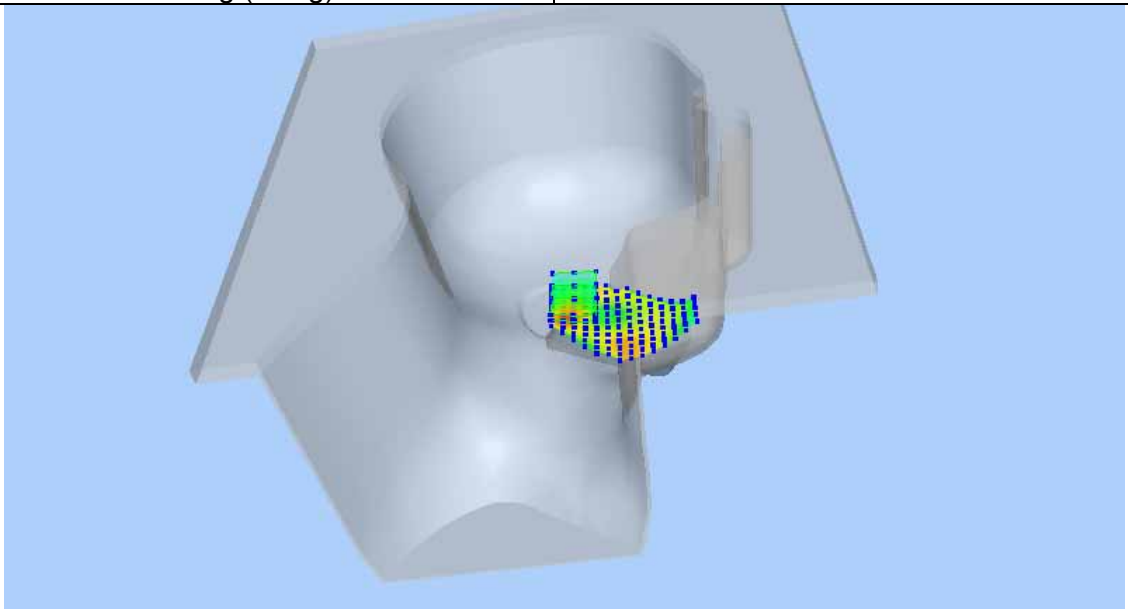

Test mode: GPRS1900, Middle channel (Body, Front Surface)
Product Description: Smart Phone
Model: Z51
Test Date:June 26th,2015

Medium(liquid type)	HSL_1900
Frequency (MHz)	1880.0000
Relative permittivity (real part)	53.62
Conductivity (S/m)	1.50
Crest factor	2.0
E-Field Probe	SN 07/15 EP246
Conversion Factor	4.57
Sensor-Surface	4mm
Area Scan	dx=8mm dy=8mm
Zoom Scan	5x5x7,dx=8mm dy=8mm dz=5mm
Variation (%)	1.02
SAR 10g (W/Kg)	0.222784
SAR 1g (W/Kg)	0.382545

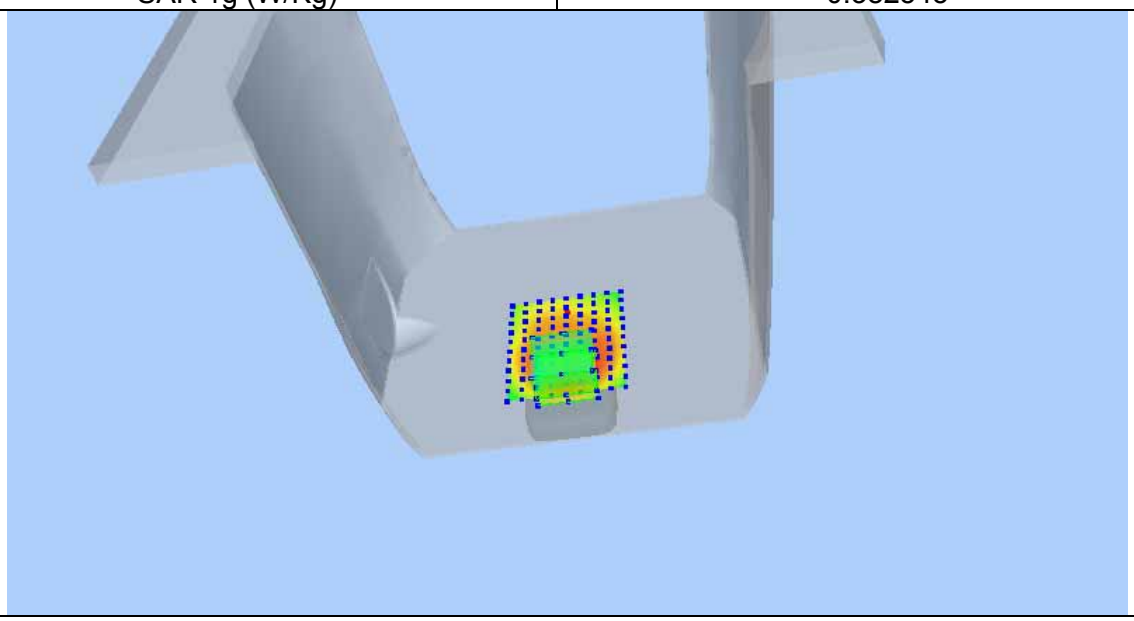

Test mode: GPRS1900, Middle channel (Body, Back Surface)
Product Description: Smart Phone
Model: Z51
Test Date:June 26th,2015

Medium(liquid type)	MSL_1900
Frequency (MHz)	1880.0000
Relative permittivity (real part)	53.62
Conductivity (S/m)	1.50
Crest factor	2.0
E-Field Probe	SN 07/15 EP246
Conversion Factor	4.57
Sensor-Surface	4mm
Area Scan	dx=8mm dy=8mm
Zoom Scan	5x5x7,dx=8mm dy=8mm dz=5mm
Variation (%)	0.02
SAR 10g (W/Kg)	0.229872
SAR 1g (W/Kg)	0.392189

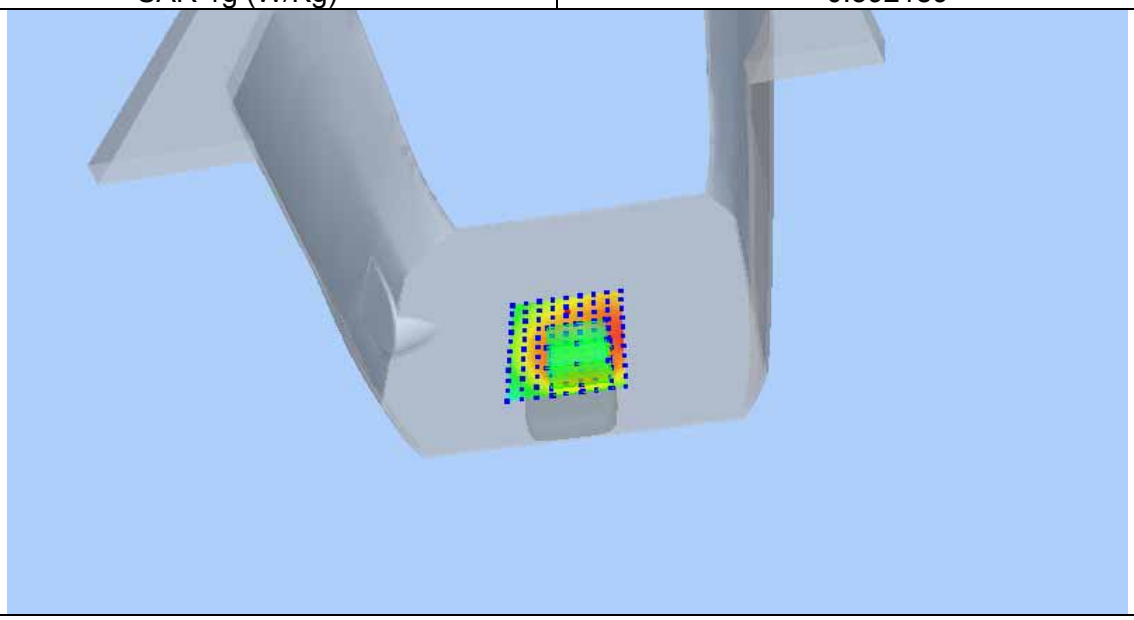

Test mode: GPRS1900, Middle channel (Body, Right Edge)
Product Description: Smart Phone
Model: Z51
Test Date:June 26th,2015

Medium(liquid type)	MSL_1900
Frequency (MHz)	1880.0000
Relative permittivity (real part)	53.62
Conductivity (S/m)	1.50
Crest factor	2.0
E-Field Probe	SN 07/15 EP246
Conversion Factor	4.57
Sensor-Surface	4mm
Area Scan	dx=8mm dy=8mm
Zoom Scan	5x5x7,dx=8mm dy=8mm dz=5mm
Variation (%)	3.55
SAR 10g (W/Kg)	0.068168
SAR 1g (W/Kg)	0.110155

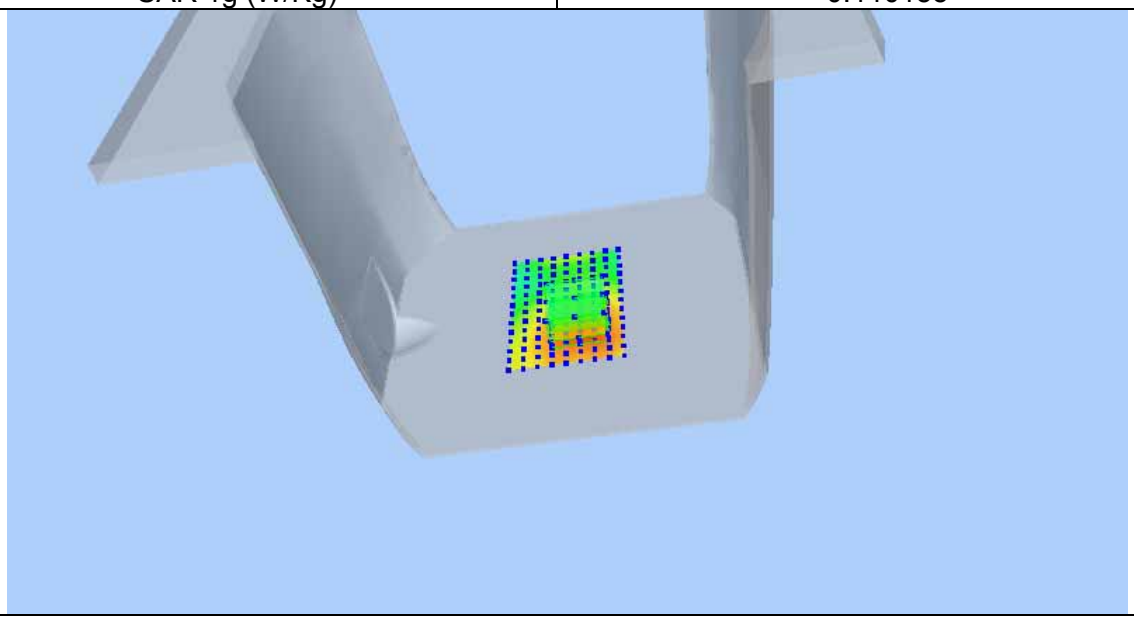

Test mode: GPRS1900, Middle channel (Body,Left Edge)
Product Description: Smart Phone
Model: Z51
Test Date:June 26th,2015

Medium(liquid type)	MSL_1900
Frequency (MHz)	1880.0000
Relative permittivity (real part)	53.62
Conductivity (S/m)	1.50
Crest factor	2.0
E-Field Probe	SN 07/15 EP246
Conversion Factor	4.57
Sensor-Surface	4mm
Area Scan	dx=8mm dy=8mm
Zoom Scan	5x5x7,dx=8mm dy=8mm dz=5mm
Variation (%)	-2.91
SAR 10g (W/Kg)	0.141708
SAR 1g (W/Kg)	0.243259

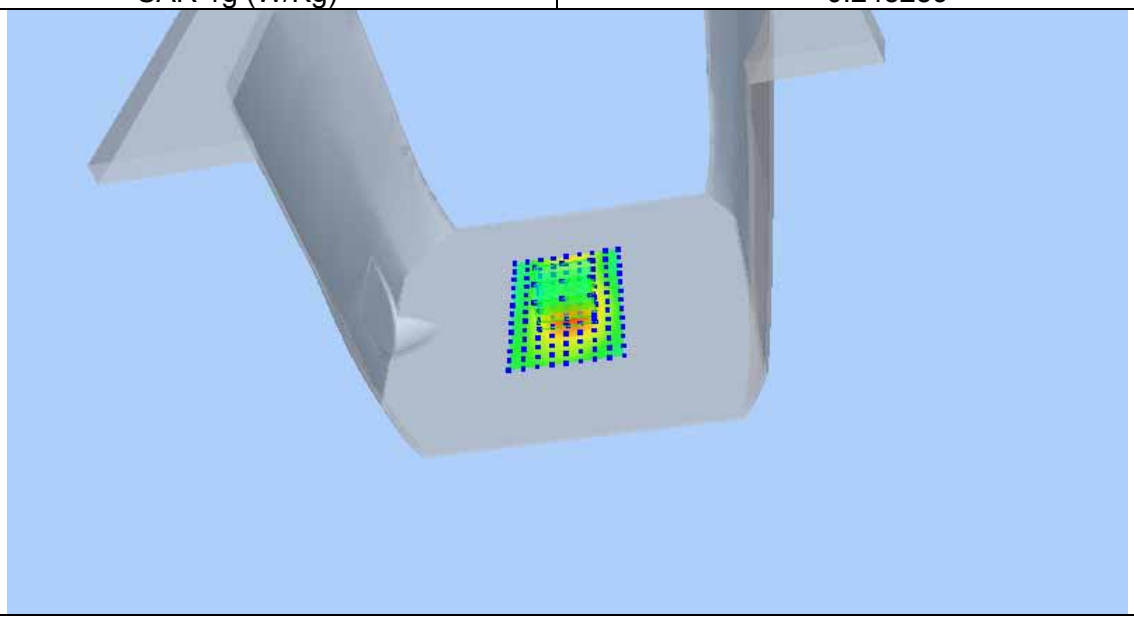

Test mode: GPRS1900, Middle channel (Body,Bottom Edge)
Product Description: Smart Phone
Model: Z51
Test Date:June 26th,2015

Medium(liquid type)	MSL_1900
Frequency (MHz)	1880.0000
Relative permittivity (real part)	53.62
Conductivity (S/m)	1.50
Crest factor	2.0
E-Field Probe	SN 07/15 EP246
Conversion Factor	4.57
Sensor-Surface	4mm
Area Scan	dx=8mm dy=8mm
Zoom Scan	5x5x7,dx=8mm dy=8mm dz=5mm
Variation (%)	-0.74
SAR 10g (W/Kg)	0.406198
SAR 1g (W/Kg)	0.733628

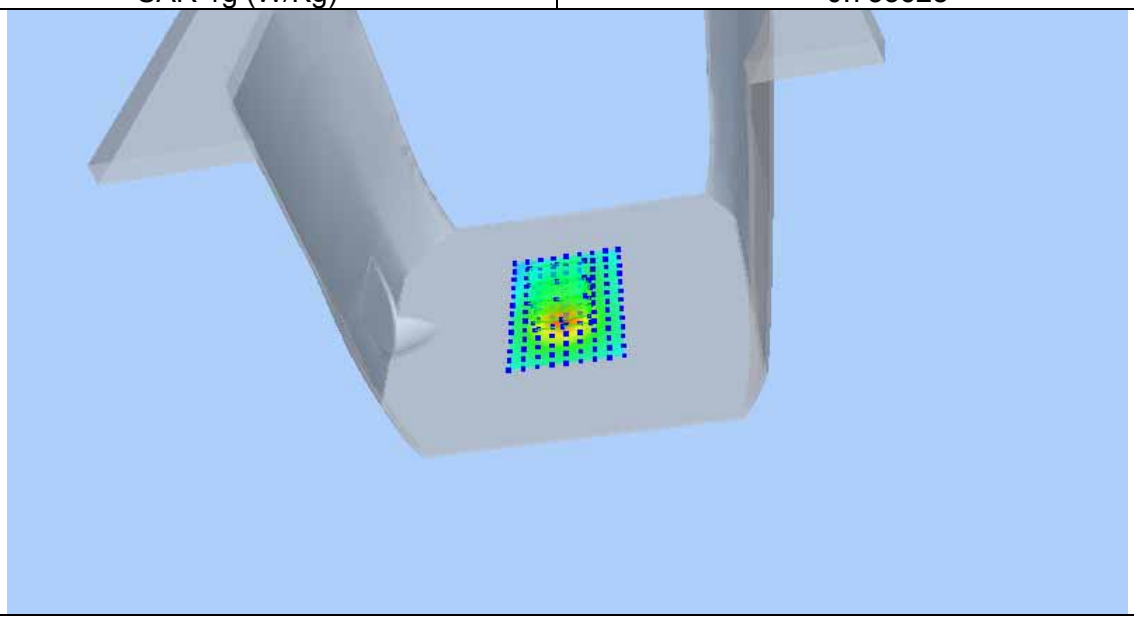

Test mode: WCDMA BANDⅡ, Middle channel (Right Head Cheek)
Product Description: Smart Phone
Model: Z51
Test Date:June 26th,2015

Medium(liquid type)	HSL_1900
Frequency (MHz)	1880.0000
Relative permittivity (real part)	40.37
Conductivity (S/m)	1.38
Crest factor	1.0
E-Field Probe	SN 07/15 EP246
Conversion Factor	4.45
Sensor-Surface	4mm
Area Scan	dx=8mm dy=8mm
Zoom Scan	5x5x7,dx=8mm dy=8mm dz=5mm
Variation (%)	0.88
SAR 10g (W/Kg)	0.169737
SAR 1g (W/Kg)	0.273916

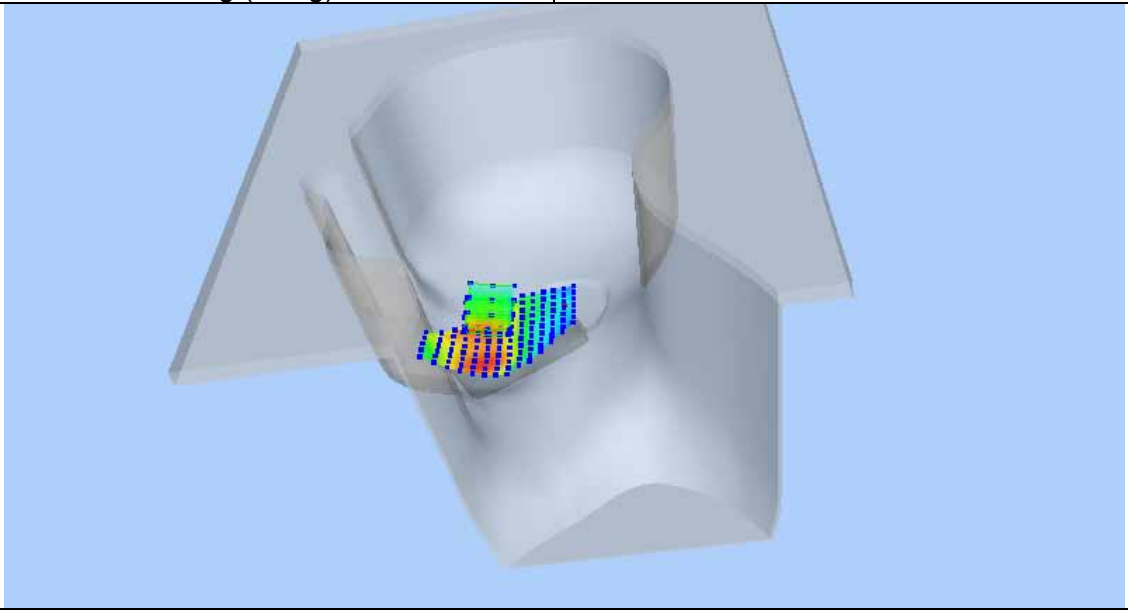

Test mode: WCDMA BANDⅡ, Middle channel (Right Head Tilt)
Product Description: Smart Phone
Model: Z51
Test Date:June 26th,2015

Medium(liquid type)	HSL_1900
Frequency (MHz)	1880.0000
Relative permittivity (real part)	40.37
Conductivity (S/m)	1.38
Crest factor	1.0
E-Field Probe	SN 07/15 EP246
Conversion Factor	4.45
Sensor-Surface	4mm
Area Scan	dx=8mm dy=8mm
Zoom Scan	5x5x7,dx=8mm dy=8mm dz=5mm
Variation (%)	2.17
SAR 10g (W/Kg)	0.044182
SAR 1g (W/Kg)	0.078396

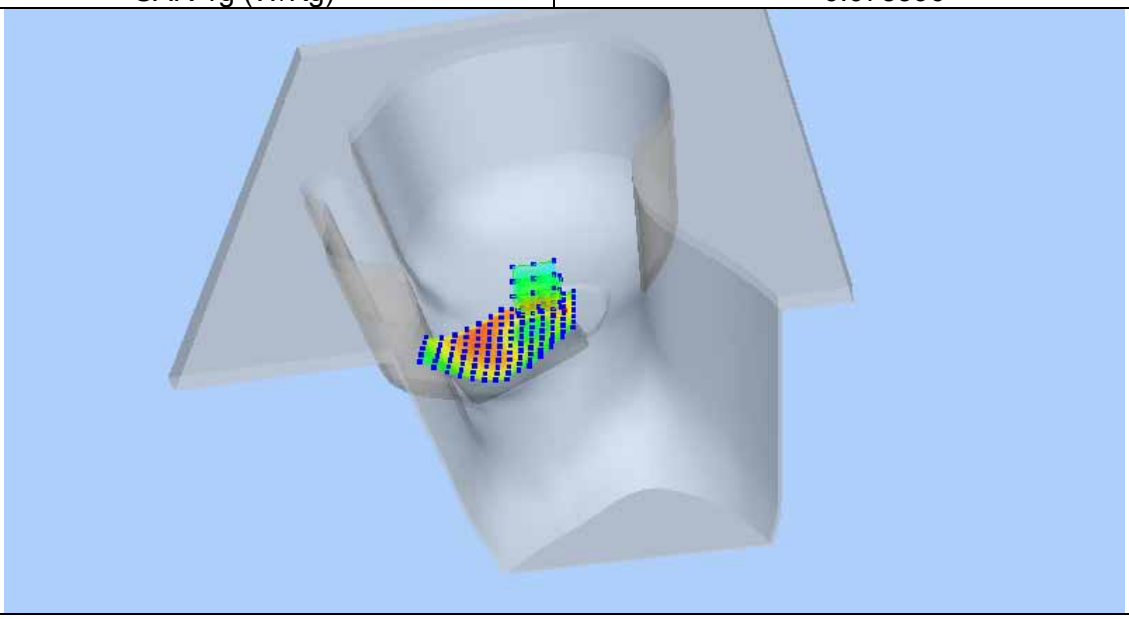

Test mode: WCDMA BANDⅡ, Middle channel (Left Head Cheek)
Product Description: Smart Phone
Model: Z51
Test Date:June 26th,2015

Medium(liquid type)	HSL_1900
Frequency (MHz)	1880.000
Relative permittivity (real part)	40.37
Conductivity (S/m)	1.38
Crest factor	1.0
E-Field Probe	SN 07/15 EP246
Conversion Factor	4.45
Sensor-Surface	4mm
Area Scan	dx=8mm dy=8mm
Zoom Scan	5x5x7,dx=8mm dy=8mm dz=5mm
Variation (%)	0.38
SAR 10g (W/Kg)	0.408155
SAR 1g (W/Kg)	0.697377

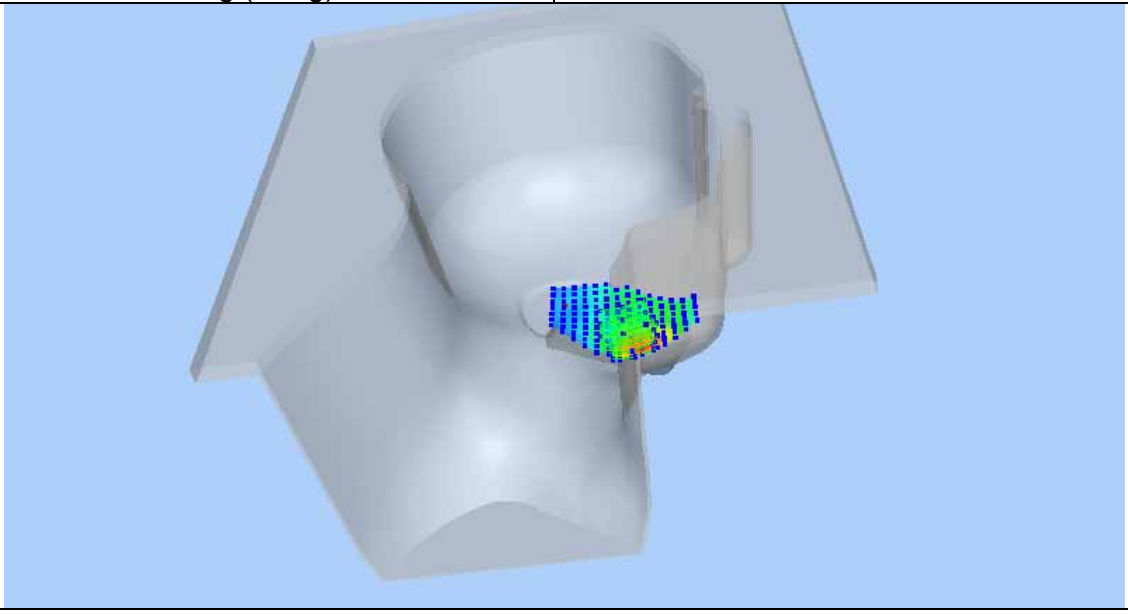

Test mode: WCDMA BANDⅡ, Middle channel (Left Head Tilt)
Product Description: Smart Phone
Model: Z51
Test Date:June 26th,2015

Medium(liquid type)	HSL_1900
Frequency (MHz)	1880.0000
Relative permittivity (real part)	40.37
Conductivity (S/m)	1.38
Crest factor	1.0
E-Field Probe	SN 07/15 EP246
Conversion Factor	4.45
Sensor-Surface	4mm
Area Scan	dx=8mm dy=8mm
Zoom Scan	5x5x7,dx=8mm dy=8mm dz=5mm
Variation (%)	-3.53
SAR 10g (W/Kg)	0.047340
SAR 1g (W/Kg)	0.073814

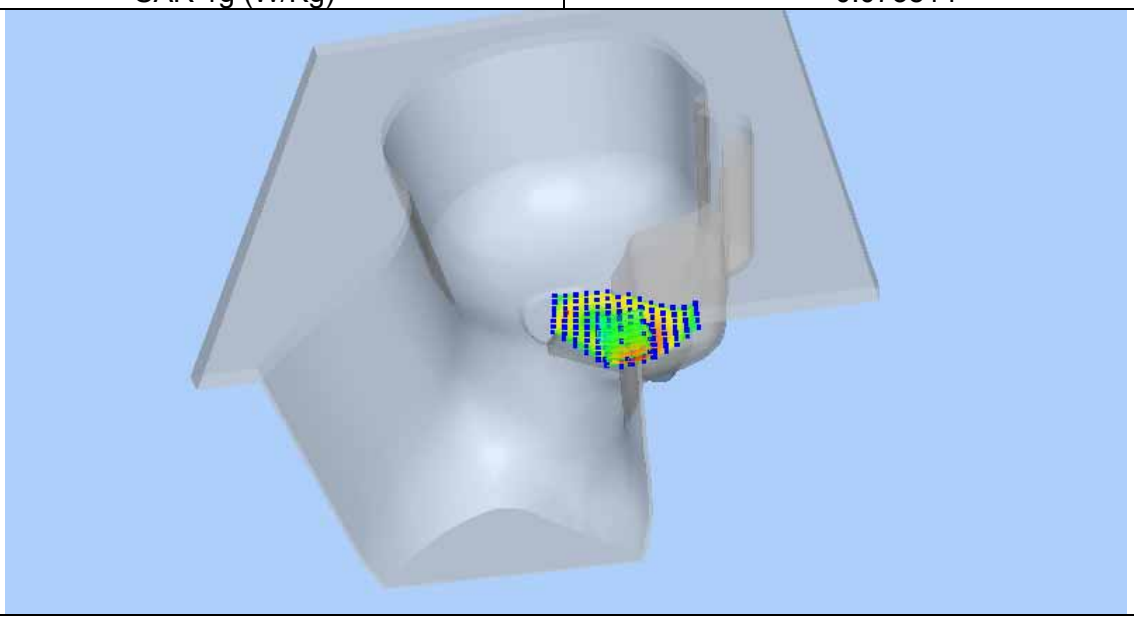

Test mode: WCDMA BANDⅡ, Middle channel (Body, Front Surface)
Product Description: Smart Phone
Model: Z51
Test Date:June 26th,2015

Medium(liquid type)	MSL_1900
Frequency (MHz)	1880.0000
Relative permittivity (real part)	53.62
Conductivity (S/m)	1.50
Crest factor	1.0
E-Field Probe	SN 07/15 EP246
Conversion Factor	4.57
Sensor-Surface	4mm
Area Scan	dx=8mm dy=8mm
Zoom Scan	5x5x7,dx=8mm dy=8mm dz=5mm
Variation (%)	-0.07
SAR 10g (W/Kg)	0.326422
SAR 1g (W/Kg)	0.559417

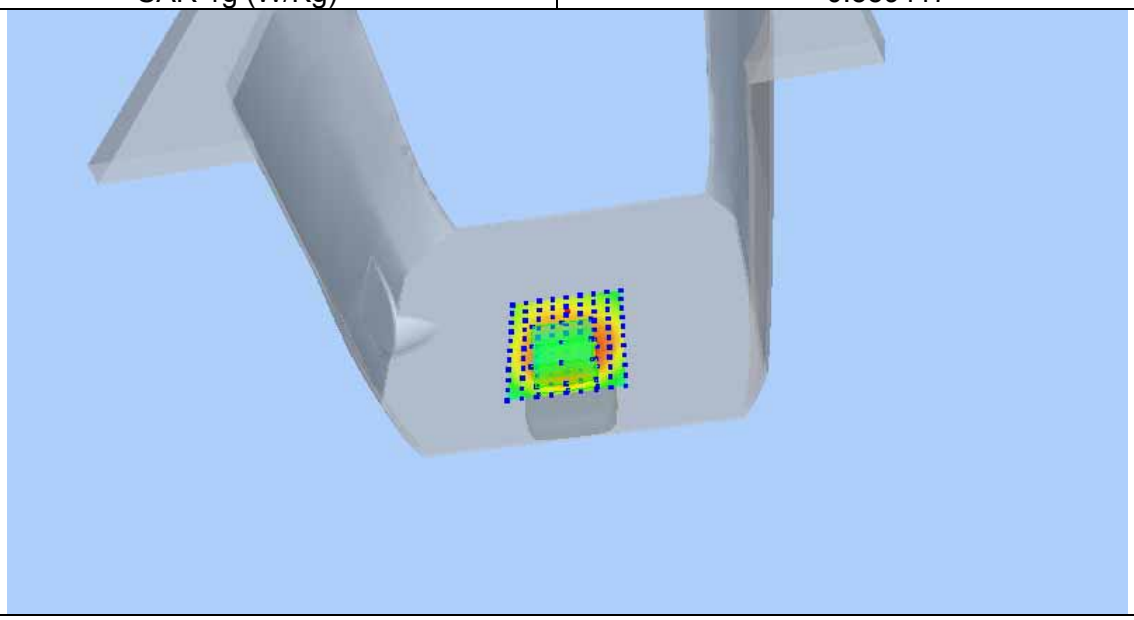

Test mode: WCDMA BANDⅡ, Middle channel (Body, Back Surface)
Product Description: Smart Phone
Model: Z51
Test Date:June 26th,2015

Medium(liquid type)	MSL_1900
Frequency (MHz)	1880.0000
Relative permittivity (real part)	53.62
Conductivity (S/m)	1.50
Crest factor	1.0
E-Field Probe	SN 07/15 EP246
Conversion Factor	4.57
Sensor-Surface	4mm
Area Scan	dx=8mm dy=8mm
Zoom Scan	5x5x7,dx=8mm dy=8mm dz=5mm
Variation (%)	1.17
SAR 10g (W/Kg)	0.386210
SAR 1g (W/Kg)	0.685689

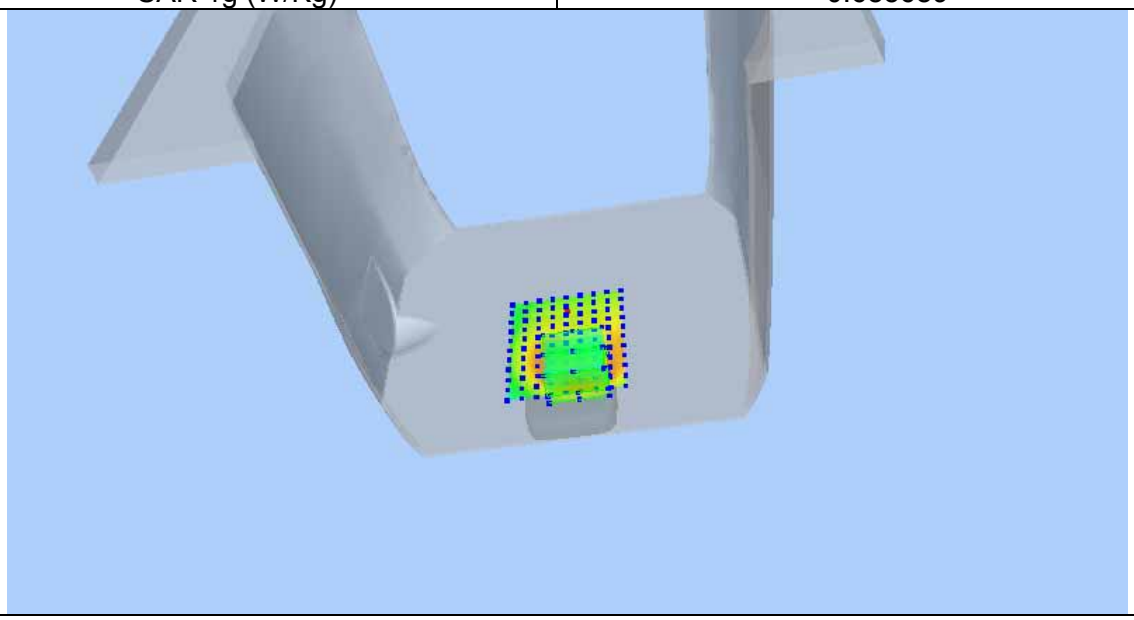

Test mode: WCDMA BANDⅡ, Middle channel (Body, Right Edge)
Product Description: Smart Phone
Model: Z51
Test Date:June 26th,2015

Medium(liquid type)	MSL_1900
Frequency (MHz)	1880.0000
Relative permittivity (real part)	53.62
Conductivity (S/m)	1.50
Crest factor	1.0
E-Field Probe	SN 07/15 EP246
Conversion Factor	4.57
Sensor-Surface	4mm
Area Scan	dx=8mm dy=8mm
Zoom Scan	5x5x7,dx=8mm dy=8mm dz=5mm
Variation (%)	-0.70
SAR 10g (W/Kg)	0.134202
SAR 1g (W/Kg)	0.226603

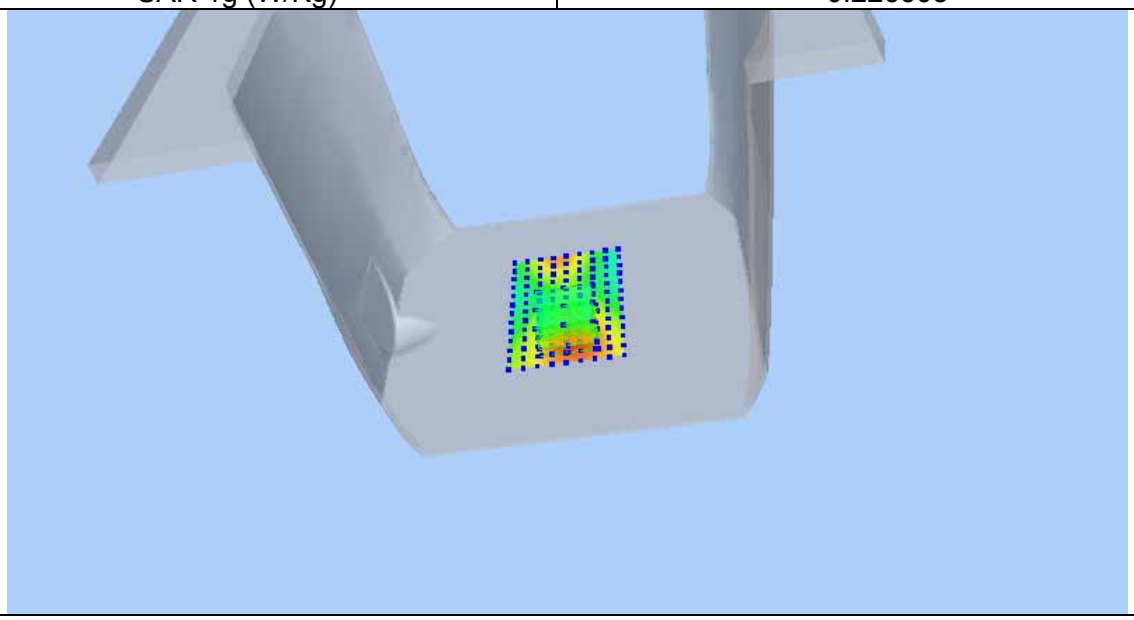

Test mode: WCDMA BANDⅡ, Middle channel (Body, Left Edge)
Product Description: Smart Phone
Model: Z51
Test Date:June 26th,2015

Medium(liquid type)	MSL_1900
Frequency (MHz)	1880.0000
Relative permittivity (real part)	53.62
Conductivity (S/m)	1.50
Crest factor	1.0
E-Field Probe	SN 07/15 EP246
Conversion Factor	4.57
Sensor-Surface	4mm
Area Scan	dx=8mm dy=8mm
Zoom Scan	5x5x7,dx=8mm dy=8mm dz=5mm
Variation (%)	-0.34
SAR 10g (W/Kg)	0.251631
SAR 1g (W/Kg)	0.440861

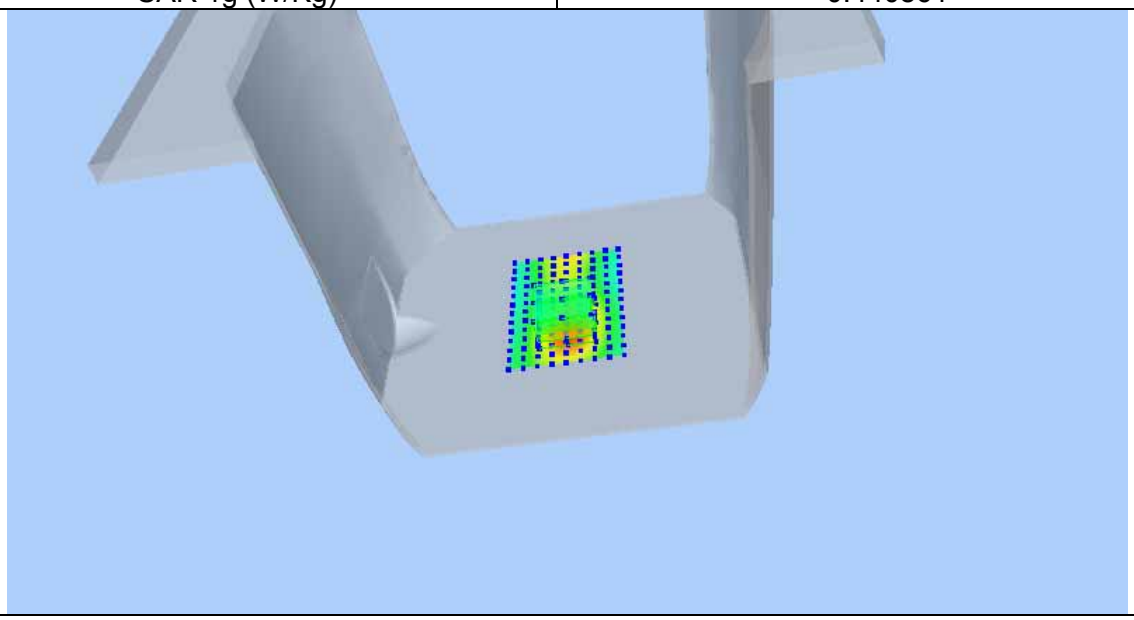

Test mode: WCDMA BANDⅡ, Middle channel (Body, Bottom Edge)
Product Description: Smart Phone
Model: Z51
Test Date:June 26th,2015

Medium(liquid type)	MSL_1900
Frequency (MHz)	1880.0000
Relative permittivity (real part)	53.62
Conductivity (S/m)	1.50
Crest factor	1.0
E-Field Probe	SN 07/15 EP246
Conversion Factor	4.57
Sensor-Surface	4mm
Area Scan	dx=8mm dy=8mm
Zoom Scan	5x5x7,dx=8mm dy=8mm dz=5mm
Variation (%)	-0.54
SAR 10g (W/Kg)	0.423684
SAR 1g (W/Kg)	0.753353

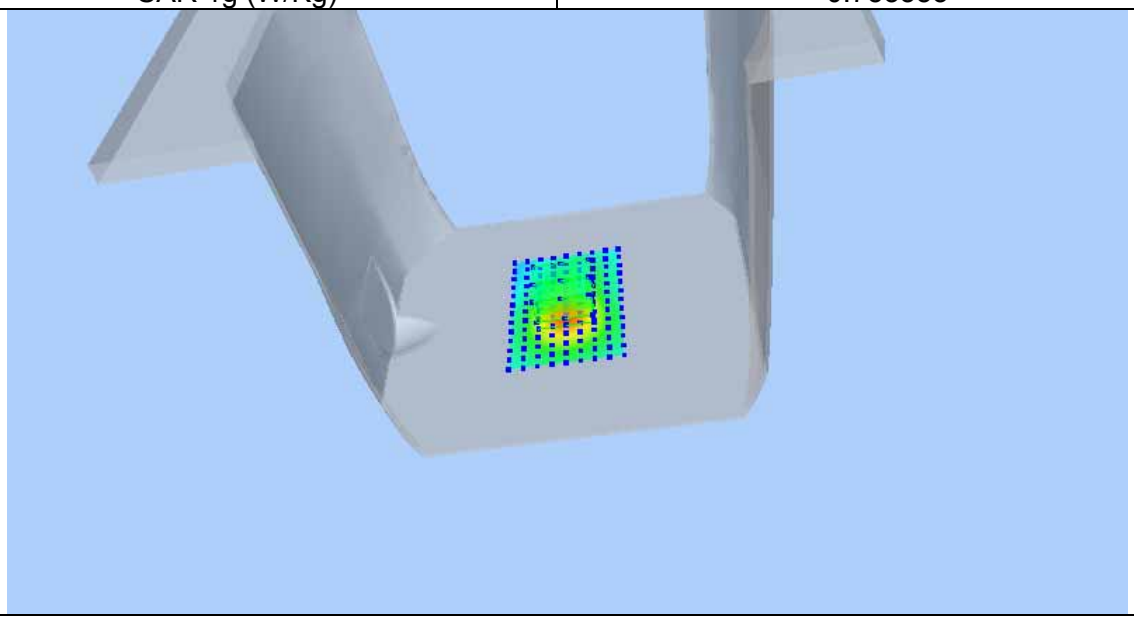

14 Calibration reports-Probe

COMOSAR E-Field Probe Calibration Report

Ref : ACR.92.1.15.SATU.A

WALTEK SERVICES (SHENZHEN) CO., LTD
1/F., FUKANGTAI BUILDING, WEST BAIMA ROAD, SONGGANG STREET
BAOAN DISTRICT, SHENZHEN GUANGDONG 518105, CHINA

MVG COMOSAR DOSIMETRIC E-FIELD PROBE
SERIAL NO.: SN 07/15 EP246

Calibrated at MVG US
2105 Barrett Park Dr. - Kennesaw, GA 30144

03/16/2015

Summary:

This document presents the method and results from an accredited COMOSAR Dosimetric E-Field Probe calibration performed in MVG USA using the CALISAR / CALIBAIR test bench, for use with a COMOSAR system only. All calibration results are traceable to national metrology institutions.

	Name	Function	Date	Signature
Prepared by :	Jérôme LUC	Product Manager	4/2/2015	
Checked by :	Jérôme LUC	Product Manager	4/2/2015	
Approved by :	Kim RUTKOWSKI	Quality Manager	4/2/2015	

	Customer Name
Distribution :	Waltek Services (Shenzhen) Co., Ltd

Issue	Date	Modifications
A	4/2/2015	Initial release

This document shall not be reproduced, except in full or in part, without the written approval of MVG. The information contained herein is to be used only for the purpose for which it is submitted and is not to be released in whole or part without written approval of MVG.

TABLE OF CONTENTS

1 Device Under Test 4
2 Product Description 4
2.1 General Information 4
3 Measurement Method 4
3.1 Linearity 4
3.2 Sensitivity 5
3.3 Lower Detection Limit 5
3.4 Isotropy 5
3.5 Boundary Effect 5
4 Measurement Uncertainty 5
5 Calibration Measurement Results 6
5.1 Sensitivity in air 6
5.2 Linearity 7
5.3 Sensitivity in liquid 7
5.4 Isotropy 8
6 List of Equipment 9

This document shall not be reproduced, except in full or in part, without the written approval of MVG. The information contained herein is to be used only for the purpose for which it is submitted and is not to be released in whole or part without written approval of MVG.

1 DEVICE UNDER TEST

Device Under Test	
Device Type	COMOSAR DOSIMETRIC E FIELD PROBE
Manufacturer	MVG
Model	SSE5
Serial Number	SN 07/15 EP246
Product Condition (new / used)	New
Frequency Range of Probe	0.7 GHz-3GHz
Resistance of Three Dipoles at Connector	Dipole 1: R1=0.178 MΩ Dipole 2: R2=0.177 MΩ Dipole 3: R3=0.180 MΩ

A yearly calibration interval is recommended.

2 PRODUCT DESCRIPTION

2.1 GENERAL INFORMATION

MVG's COMOSAR E field Probes are built in accordance to the IEEE 1528, OET 65 Bulletin C and CEI/IEC 62209 standards.

Figure 1 – *MVG COMOSAR Dosimetric E field Dipole*

Probe Length	330 mm
Length of Individual Dipoles	4.5 mm
Maximum external diameter	8 mm
Probe Tip External Diameter	5 mm
Distance between dipoles / probe extremity	2.7 mm

3 MEASUREMENT METHOD

The IEEE 1528, OET 65 Bulletin C, CENELEC EN50361 and CEI/IEC 62209 standards provide recommended practices for the probe calibrations, including the performance characteristics of interest and methods by which to assess their affect. All calibrations / measurements performed meet the fore mentioned standards.

3.1 LINEARITY

The evaluation of the linearity was done in free space using the waveguide, performing a power sweep to cover the SAR range 0.01W/kg to 100W/kg.

This document shall not be reproduced, except in full or in part, without the written approval of MVG. The information contained herein is to be used only for the purpose for which it is submitted and is not to be released in whole or part without written approval of MVG.

3.2 SENSITIVITY

The sensitivity factors of the three dipoles were determined using a two step calibration method (air and tissue simulating liquid) using waveguides as outlined in the standards.

3.3 LOWER DETECTION LIMIT

The lower detection limit was assessed using the same measurement set up as used for the linearity measurement. The required lower detection limit is 10 mW/kg.

3.4 ISOTROPY

The axial isotropy was evaluated by exposing the probe to a reference wave from a standard dipole with the dipole mounted under the flat phantom in the test configuration suggested for system validations and checks. The probe was rotated along its main axis from 0 - 360 degrees in 15 degree steps. The hemispherical isotropy is determined by inserting the probe in a thin plastic box filled with tissue-equivalent liquid, with the plastic box illuminated with the fields from a half wave dipole. The dipole is rotated about its axis (0°–180°) in 15° increments. At each step the probe is rotated about its axis (0°–360°).

3.5 BOUNDARY EFFECT

The boundary effect is defined as the deviation between the SAR measured data and the expected exponential decay in the liquid when the probe is oriented normal to the interface. To evaluate this effect, the liquid filled flat phantom is exposed to fields from either a reference dipole or waveguide. With the probe normal to the phantom surface, the peak spatial average SAR is measured and compared to the analytical value at the surface.

4 MEASUREMENT UNCERTAINTY

The guidelines outlined in the IEEE 1528, OET 65 Bulletin C, CENELEC EN50361 and CEI/IEC 62209 standards were followed to generate the measurement uncertainty associated with an E-field probe calibration using the waveguide technique. All uncertainties listed below represent an expanded uncertainty expressed at approximately the 95% confidence level using a coverage factor of k=2, traceable to the Internationally Accepted Guides to Measurement Uncertainty.

Uncertainty analysis of the probe calibration in waveguide					
ERROR SOURCES	**Uncertainty value (%)**	**Probability Distribution**	**Divisor**	**ci**	**Standard Uncertainty (%)**
Incident or forward power	3.00%	Rectangular	$\sqrt{3}$	1	1.732%
Reflected power	3.00%	Rectangular	$\sqrt{3}$	1	1.732%
Liquid conductivity	5.00%	Rectangular	$\sqrt{3}$	1	2.887%
Liquid permittivity	4.00%	Rectangular	$\sqrt{3}$	1	2.309%
Field homogeneity	3.00%	Rectangular	$\sqrt{3}$	1	1.732%
Field probe positioning	5.00%	Rectangular	$\sqrt{3}$	1	2.887%

This document shall not be reproduced, except in full or in part, without the written approval of MVG. The information contained herein is to be used only for the purpose for which it is submitted and is not to be released in whole or part without written approval of MVG.

Field probe linearity	3.00%	Rectangular	$\sqrt{3}$	1	1.732%
Combined standard uncertainty					5.831%
Expanded uncertainty 95 % confidence level k = 2					12.0%

5 CALIBRATION MEASUREMENT RESULTS

Calibration Parameters	
Liquid Temperature	21 °C
Lab Temperature	21 °C
Lab Humidity	45 %

5.1 SENSITIVITY IN AIR

Normx dipole 1 (µV/(V/m)²)	Normy dipole 2 (µV/(V/m)²)	Normz dipole 3 (µV/(V/m)²)
6.41	6.49	6.16

DCP dipole 1 (mV)	DCP dipole 2 (mV)	DCP dipole 3 (mV)
93	94	91

Calibration curves ei=f(V) (i=1,2,3) allow to obtain H-field value using the formula:

$$E = \sqrt{E_1^2 + E_2^2 + E_3^2}$$

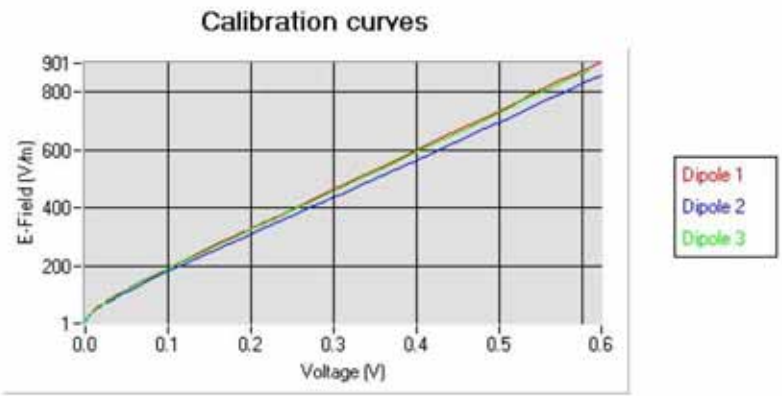

This document shall not be reproduced, except in full or in part, without the written approval of MVG. The information contained herein is to be used only for the purpose for which it is submitted and is not to be released in whole or part without written approval of MVG.

5.2 LINEARITY

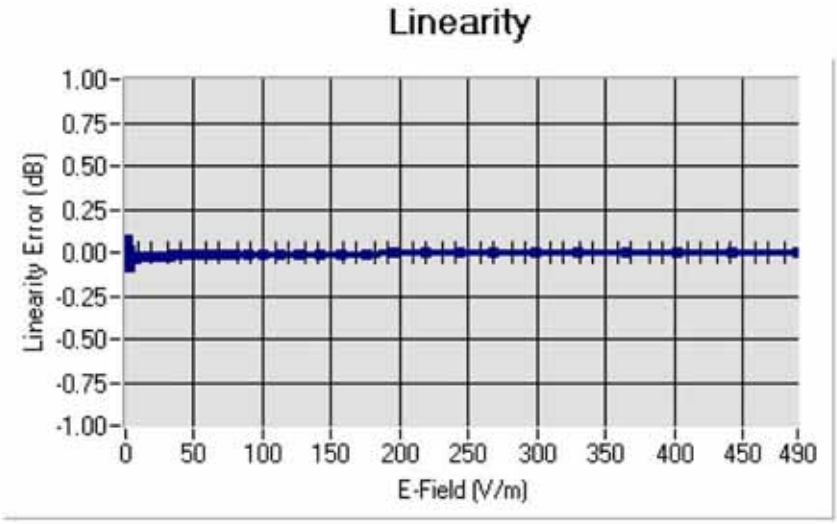

Linearity: +/-1.95% (+/-0.09dB)

5.3 SENSITIVITY IN LIQUID

Liquid	Frequency (MHz +/- 100MHz)	Permittivity	Epsilon (S/m)	ConvF
HL750	750	41.85	0.90	4.35
BL750	750	56.28	0.98	4.50
HL850	835	42.59	0.90	4.66
BL850	835	53.19	0.97	4.80
HL900	900	42.25	0.97	4.36
BL900	900	56.41	1.08	4.48
HL1800	1800	41.10	1.39	3.86
BL1800	1800	53.00	1.52	3.94
HL1900	1900	40.88	1.43	4.45
BL1900	1900	53.93	1.55	4.57
HL2000	2000	39.52	1.44	4.02
BL2000	2000	53.65	1.54	4.13
HL2450	2450	38.85	1.79	3.83
BL2450	2450	52.70	1.94	3.94
HL2600	2600	38.16	1.93	3.83
BL2600	2600	51.55	2.21	3.98

LOWER DETECTION LIMIT: 7mW/kg

This document shall not be reproduced, except in full or in part, without the written approval of MVG. The information contained herein is to be used only for the purpose for which it is submitted and is not to be released in whole or part without written approval of MVG.

5.4 ISOTROPY

HL900 MHz

- Axial isotropy: 0.04 dB
- Hemispherical isotropy: 0.06 dB

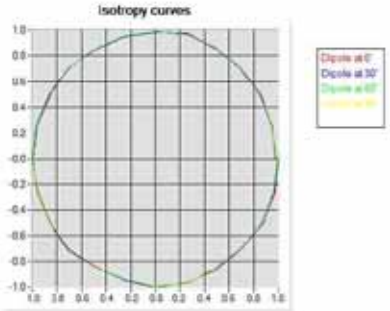

HL1800 MHz

- Axial isotropy: 0.04 dB
- Hemispherical isotropy: 0.06 dB

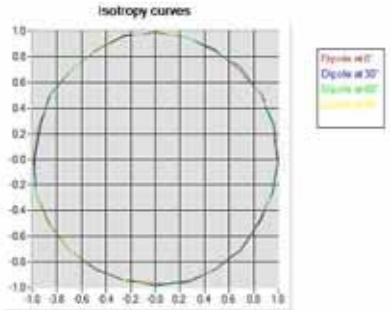

This document shall not be reproduced, except in full or in part, without the written approval of MVG. The information contained herein is to be used only for the purpose for which it is submitted and is not to be released in whole or part without written approval of MVG.

6 LIST OF EQUIPMENT

Equipment Summary Sheet				
Equipment Description	**Manufacturer / Model**	**Identification No.**	**Current Calibration Date**	**Next Calibration Date**
Flat Phantom	MVG	SN-20/09-SAM71	Validated. No cal required.	Validated. No cal required.
COMOSAR Test Bench	Version 3	NA	Validated. No cal required.	Validated. No cal required.
Network Analyzer	Rhode & Schwarz ZVA	SN100132	02/2013	02/2016
Reference Probe	MVG	EP 94 SN 37/08	10/2014	10/2015
Multimeter	Keithley 2000	1188656	12/2013	12/2016
Signal Generator	Agilent E4438C	MY49070581	12/2013	12/2016
Amplifier	Aethercomm	SN 046	Characterized prior to test. No cal required.	Characterized prior to test. No cal required.
Power Meter	HP E4418A	US38261498	12/2013	12/2016
Power Sensor	HP ECP-E26A	US37181460	12/2013	12/2016
Directional Coupler	Narda 4216-20	01386	Characterized prior to test. No cal required.	Characterized prior to test. No cal required.
Waveguide	Mega Industries	069Y7-158-13-712	Validated. No cal required.	Validated. No cal required.
Waveguide Transition	Mega Industries	069Y7-158-13-701	Validated. No cal required.	Validated. No cal required.
Waveguide Termination	Mega Industries	069Y7-158-13-701	Validated. No cal required.	Validated. No cal required.
Temperature / Humidity Sensor	Control Company	11-661-9	8/2012	8/2015

This document shall not be reproduced, except in full or in part, without the written approval of MVG. The information contained herein is to be used only for the purpose for which it is submitted and is not to be released in whole or part without written approval of MVG.

SAR Reference Dipole Calibration Report

Ref : ACR.92.3.15.SATU.A

WALTEK SERVICES (SHENZHEN) CO., LTD
1/F., FUKANGTAI BUILDING, WEST BAIMA ROAD, SONGGANG STREET
BAOAN DISTRICT, SHENZHEN GUANGDONG 518105, CHINA

MVG COMOSAR REFERENCE DIPOLE
FREQUENCY: 835 MHZ
SERIAL NO.: SN 09/15 DIP 0G835-358

Calibrated at MVG US
2105 Barrett Park Dr. - Kennesaw, GA 30144

03/16/2015

Summary:

This document presents the method and results from an accredited SAR reference dipole calibration performed in MVG USA using the COMOSAR test bench. All calibration results are traceable to national metrology institutions.

SAR REFERENCE DIPOLE CALIBRATION REPORT

Ref: ACR.92.3.15.SATU.A

	Name	*Function*	*Date*	*Signature*
Prepared by :	Jérôme LUC	Product Manager	4/2/2015	
Checked by :	Jérôme LUC	Product Manager	4/2/2015	
Approved by :	Kim RUTKOWSKI	Quality Manager	4/2/2015	

	Customer Name
Distribution :	Waltek Services (Shenzhen) Co., Ltd

Issue	*Date*	*Modifications*
A	4/2/2015	Initial release

This document shall not be reproduced, except in full or in part, without the written approval of MVG. The information contained herein is to be used only for the purpose for which it is submitted and is not to be released in whole or part without written approval of MVG.

TABLE OF CONTENTS

1 Introduction 4
2 Device Under Test 4
3 Product Description 4
3.1 General Information 4
4 Measurement Method 5
4.1 Return Loss Requirements 5
4.2 Mechanical Requirements 5
5 Measurement Uncertainty 5
5.1 Return Loss 5
5.2 Dimension Measurement 5
5.3 Validation Measurement 5
6 Calibration Measurement Results 6
6.1 Return Loss and Impedance In Head Liquid 6
6.2 Return Loss and Impedance In Body Liquid 6
6.3 Mechanical Dimensions 7
7 Validation measurement 7
7.1 Head Liquid Measurement 7
7.2 SAR Measurement Result With Head Liquid 8
7.3 Body Liquid Measurement 9
7.4 SAR Measurement Result With Body Liquid 10
8 List of Equipment 12

This document shall not be reproduced, except in full or in part, without the written approval of MVG. The information contained herein is to be used only for the purpose for which it is submitted and is not to be released in whole or part without written approval of MVG.

1 INTRODUCTION

This document contains a summary of the requirements set forth by the IEEE 1528, FCC KDBs and CEI/IEC 62209 standards for reference dipoles used for SAR measurement system validations and the measurements that were performed to verify that the product complies with the fore mentioned standards.

2 DEVICE UNDER TEST

Device Under Test	
Device Type	COMOSAR 835 MHz REFERENCE DIPOLE
Manufacturer	MVG
Model	SID835
Serial Number	SN 09/15 DIP 0G835-358
Product Condition (new / used)	New

A yearly calibration interval is recommended.

3 PRODUCT DESCRIPTION

3.1 GENERAL INFORMATION

MVG's COMOSAR Validation Dipoles are built in accordance to the IEEE 1528, FCC KDBs and CEI/IEC 62209 standards. The product is designed for use with the COMOSAR test bench only.

Figure 1 – *MVG COMOSAR Validation Dipole*

This document shall not be reproduced, except in full or in part, without the written approval of MVG. The information contained herein is to be used only for the purpose for which it is submitted and is not to be released in whole or part without written approval of MVG.

4 MEASUREMENT METHOD

The IEEE 1528, FCC KDBs and CEI/IEC 62209 standards provide requirements for reference dipoles used for system validation measurements. The following measurements were performed to verify that the product complies with the fore mentioned standards.

4.1 RETURN LOSS REQUIREMENTS

The dipole used for SAR system validation measurements and checks must have a return loss of -20 dB or better. The return loss measurement shall be performed against a liquid filled flat phantom, with the phantom constucted as outlined in the fore mentioned standards.

4.2 MECHANICAL REQUIREMENTS

The IEEE Std. 1528 and CEI/IEC 62209 standards specify the mechanical components and dimensions of the validation dipoles, with the dimensions frequency and phantom shell thickness dependent. The COMOSAR test bench employs a 2 mm phantom shell thickness therefore the dipoles sold for use with the COMOSAR test bench comply with the requirements set forth for a 2 mm phantom shell thickness.

5 MEASUREMENT UNCERTAINTY

All uncertainties listed below represent an expanded uncertainty expressed at approximately the 95% confidence level using a coverage factor of k=2, traceable to the Internationally Accepted Guides to Measurement Uncertainty.

5.1 RETURN LOSS

The following uncertainties apply to the return loss measurement:

Frequency band	Expanded Uncertainty on Return Loss
400-6000MHz	0.1 dB

5.2 DIMENSION MEASUREMENT

The following uncertainties apply to the dimension measurements:

Length (mm)	Expanded Uncertainty on Length
3 - 300	0.05 mm

5.3 VALIDATION MEASUREMENT

The guidelines outlined in the IEEE 1528, FCC KDBs, CENELEC EN50361 and CEI/IEC 62209 standards were followed to generate the measurement uncertainty for validation measurements.

This document shall not be reproduced, except in full or in part, without the written approval of MVG. The information contained herein is to be used only for the purpose for which it is submitted and is not to be released in whole or part without written approval of MVG.

Scan Volume	Expanded Uncertainty
1 g	20.3 %
10 g	20.1 %

6 CALIBRATION MEASUREMENT RESULTS

6.1 RETURN LOSS AND IMPEDANCE IN HEAD LIQUID

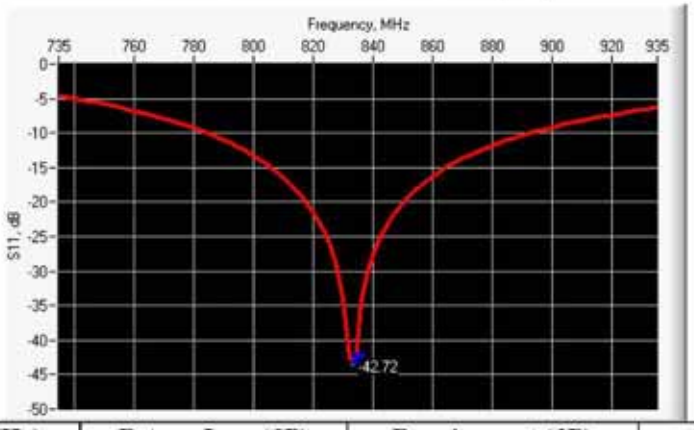

Frequency (MHz)	Return Loss (dB)	Requirement (dB)	Impedance
835	-42.72	-20	50.7 Ω + 0.3 jΩ

6.2 RETURN LOSS AND IMPEDANCE IN BODY LIQUID

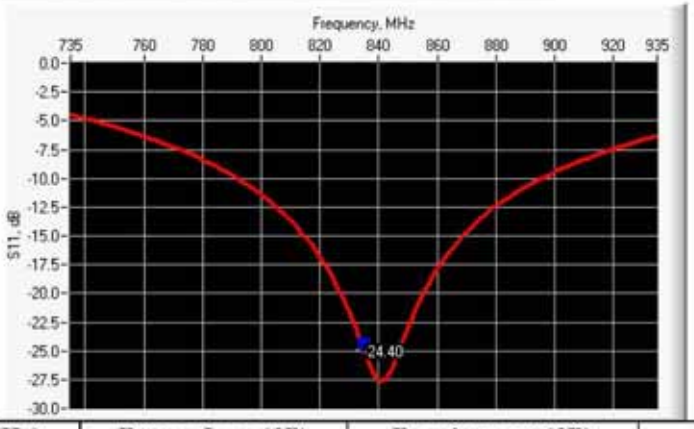

Frequency (MHz)	Return Loss (dB)	Requirement (dB)	Impedance
835	-24.40	-20	45.3 Ω + 3.7 jΩ

This document shall not be reproduced, except in full or in part, without the written approval of MVG. The information contained herein is to be used only for the purpose for which it is submitted and is not to be released in whole or part without written approval of MVG.

6.3 MECHANICAL DIMENSIONS

Frequency MHz	L mm		h mm		d mm	
	required	measured	required	measured	required	measured
300	420.0 ±1 %.		250.0 ±1 %.		6.35 ±1 %.	
450	290.0 ±1 %.		166.7 ±1 %.		6.35 ±1 %.	
750	176.0 ±1 %.		100.0 ±1 %.		6.35 ±1 %.	
835	161.0 ±1 %.	PASS	89.8 ±1 %.	PASS	3.6 ±1 %.	PASS
900	149.0 ±1 %.		83.3 ±1 %.		3.6 ±1 %.	
1450	89.1 ±1 %.		51.7 ±1 %.		3.6 ±1 %.	
1500	80.5 ±1 %.		50.0 ±1 %.		3.6 ±1 %.	
1640	79.0 ±1 %.		45.7 ±1 %.		3.6 ±1 %.	
1750	75.2 ±1 %.		42.9 ±1 %.		3.6 ±1 %.	
1800	72.0 ±1 %.		41.7 ±1 %.		3.6 ±1 %.	
1900	68.0 ±1 %.		39.5 ±1 %.		3.6 ±1 %.	
1950	66.3 ±1 %.		38.5 ±1 %.		3.6 ±1 %.	
2000	64.5 ±1 %.		37.5 ±1 %.		3.6 ±1 %.	
2100	61.0 ±1 %.		35.7 ±1 %.		3.6 ±1 %.	
2300	55.5 ±1 %.		32.6 ±1 %.		3.6 ±1 %.	
2450	51.5 ±1 %.		30.4 ±1 %.		3.6 ±1 %.	
2600	48.5 ±1 %.		28.8 ±1 %.		3.6 ±1 %.	
3000	41.5 ±1 %.		25.0 ±1 %.		3.6 ±1 %.	
3500	37.0±1 %.		26.4 ±1 %.		3.6 ±1 %.	
3700	34.7±1 %.		26.4 ±1 %.		3.6 ±1 %.	

7 VALIDATION MEASUREMENT

The IEEE Std. 1528, FCC KDBs and CEI/IEC 62209 standards state that the system validation measurements must be performed using a reference dipole meeting the fore mentioned return loss and mechanical dimension requirements. The validation measurement must be performed against a liquid filled flat phantom, with the phantom constructed as outlined in the fore mentioned standards. Per the standards, the dipole shall be positioned below the bottom of the phantom, with the dipole length centered and parallel to the longest dimension of the flat phantom, with the top surface of the dipole at the described distance from the bottom surface of the phantom.

7.1 HEAD LIQUID MEASUREMENT

Frequency MHz	Relative permittivity (ε_r')		Conductivity (σ) S/m	
	required	measured	required	measured
300	45.3 ±5 %		0.87 ±5 %	
450	43.5 ±5 %		0.87 ±5 %	

This document shall not be reproduced, except in full or in part, without the written approval of MVG. The information contained herein is to be used only for the purpose for which it is submitted and is not to be released in whole or part without written approval of MVG.

750	41.9 ±5 %		0.89 ±5 %	
835	41.5 ±5 %	PASS	0.90 ±5 %	PASS
900	41.5 ±5 %		0.97 ±5 %	
1450	40.5 ±5 %		1.20 ±5 %	
1500	40.4 ±5 %		1.23 ±5 %	
1640	40.2 ±5 %		1.31 ±5 %	
1750	40.1 ±5 %		1.37 ±5 %	
1800	40.0 ±5 %		1.40 ±5 %	
1900	40.0 ±5 %		1.40 ±5 %	
1950	40.0 ±5 %		1.40 ±5 %	
2000	40.0 ±5 %		1.40 ±5 %	
2100	39.8 ±5 %		1.49 ±5 %	
2300	39.5 ±5 %		1.67 ±5 %	
2450	39.2 ±5 %		1.80 ±5 %	
2600	39.0 ±5 %		1.96 ±5 %	
3000	38.5 ±5 %		2.40 ±5 %	
3500	37.9 ±5 %		2.91 ±5 %	

7.2 SAR MEASUREMENT RESULT WITH HEAD LIQUID

The IEEE Std. 1528 and CEI/IEC 62209 standards state that the system validation measurements should produce the SAR values shown below (for phantom thickness of 2 mm), within the uncertainty for the system validation. All SAR values are normalized to 1 W forward power. In bracket, the measured SAR is given with the used input power.

Software	OPENSAR V4
Phantom	SN 20/09 SAM71
Probe	SN 18/11 EPG122
Liquid	Head Liquid Values: eps' : 42.1 sigma : 0.92
Distance between dipole center and liquid	15.0 mm
Area scan resolution	dx=8mm/dy=8mm
Zoon Scan Resolution	dx=8mm/dy=8m/dz=5mm
Frequency	835 MHz
Input power	20 dBm
Liquid Temperature	21 °C
Lab Temperature	21 °C
Lab Humidity	45 %

Frequency MHz	1 g SAR (W/kg/W)		10 g SAR (W/kg/W)	
	required	measured	required	measured
300	2.85		1.94	
450	4.58		3.06	
750	8.49		5.55	

This document shall not be reproduced, except in full or in part, without the written approval of MVG. The information contained herein is to be used only for the purpose for which it is submitted and is not to be released in whole or part without written approval of MVG.

835	9.56	9.53 (0.95)	6.22	6.20 (0.62)
900	10.9		6.99	
1450	29		16	
1500	30.5		16.8	
1640	34.2		18.4	
1750	36.4		19.3	
1800	38.4		20.1	
1900	39.7		20.5	
1950	40.5		20.9	
2000	41.1		21.1	
2100	43.6		21.9	
2300	48.7		23.3	
2450	52.4		24	
2600	55.3		24.6	
3000	63.8		25.7	
3500	67.1		25	

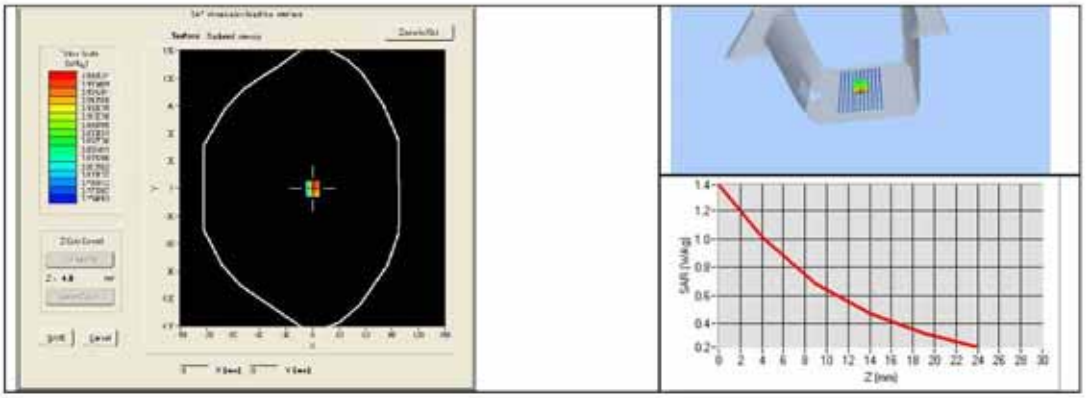

7.3 BODY LIQUID MEASUREMENT

Frequency MHz	Relative permittivity (ε_r')		Conductivity (σ) S/m	
	required	measured	required	measured
150	61.9 ±5 %		0.80 ±5 %	
300	58.2 ±5 %		0.92 ±5 %	
450	56.7 ±5 %		0.94 ±5 %	
750	55.5 ±5 %		0.96 ±5 %	
835	55.2 ±5 %	PASS	0.97 ±5 %	PASS
900	55.0 ±5 %		1.05 ±5 %	
915	55.0 ±5 %		1.06 ±5 %	

This document shall not be reproduced, except in full or in part, without the written approval of MVG. The information contained herein is to be used only for the purpose for which it is submitted and is not to be released in whole or part without written approval of MVG.

1450	54.0 ±5 %		1.30 ±5 %	
1610	53.8 ±5 %		1.40 ±5 %	
1800	53.3 ±5 %		1.52 ±5 %	
1900	53.3 ±5 %		1.52 ±5 %	
2000	53.3 ±5 %		1.52 ±5 %	
2100	53.2 ±5 %		1.62 ±5 %	
2450	52.7 ±5 %		1.95 ±5 %	
2600	52.5 ±5 %		2.16 ±5 %	
3000	52.0 ±5 %		2.73 ±5 %	
3500	51.3 ±5 %		3.31 ±5 %	
5200	49.0 ±10 %		5.30 ±10 %	
5300	48.9 ±10 %		5.42 ±10 %	
5400	48.7 ±10 %		5.53 ±10 %	
5500	48.6 ±10 %		5.65 ±10 %	
5600	48.5 ±10 %		5.77 ±10 %	
5800	48.2 ±10 %		6.00 ±10 %	

7.4 SAR MEASUREMENT RESULT WITH BODY LIQUID

Software	OPENSAR V4
Phantom	SN 20/09 SAM71
Probe	SN 18/11 EPG122
Liquid	Body Liquid Values: eps' : 53.8 sigma : 0.98
Distance between dipole center and liquid	15.0 mm
Area scan resolution	dx=8mm/dy=8mm
Zoon Scan Resolution	dx=8mm/dy=8m/dz=5mm
Frequency	835 MHz
Input power	20 dBm
Liquid Temperature	21 °C
Lab Temperature	21 °C
Lab Humidity	45 %

Frequency MHz	1 g SAR (W/kg/W)	10 g SAR (W/kg/W)
	measured	measured
835	9.44 (0.94)	6.25 (0.62)

This document shall not be reproduced, except in full or in part, without the written approval of MVG. The information contained herein is to be used only for the purpose for which it is submitted and is not to be released in whole or part without written approval of MVG.

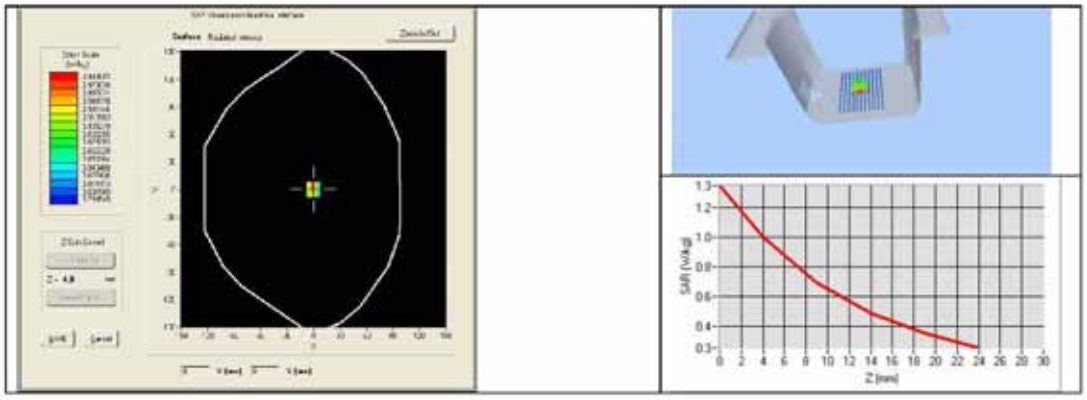

This document shall not be reproduced, except in full or in part, without the written approval of MVG.
The information contained herein is to be used only for the purpose for which it is submitted and is not to be released in whole or part without written approval of MVG.

8 LIST OF EQUIPMENT

Equipment Summary Sheet				
Equipment Description	**Manufacturer / Model**	**Identification No.**	**Current Calibration Date**	**Next Calibration Date**
SAM Phantom	MVG	SN-20/09-SAM71	Validated. No cal required.	Validated. No cal required.
COMOSAR Test Bench	Version 3	NA	Validated. No cal required.	Validated. No cal required.
Network Analyzer	Rhode & Schwarz ZVA	SN100132	02/2013	02/2016
Calipers	Carrera	CALIPER-01	12/2013	12/2016
Reference Probe	MVG	EPG122 SN 18/11	10/2014	10/2015
Multimeter	Keithley 2000	1188656	12/2013	12/2016
Signal Generator	Agilent E4438C	MY49070581	12/2013	12/2016
Amplifier	Aethercomm	SN 046	Characterized prior to test. No cal required.	Characterized prior to test. No cal required.
Power Meter	HP E4418A	US38261498	12/2013	12/2016
Power Sensor	HP ECP-E26A	US37181460	12/2013	12/2016
Directional Coupler	Narda 4216-20	01386	Characterized prior to test. No cal required.	Characterized prior to test. No cal required.
Temperature and Humidity Sensor	Control Company	11-661-9	8/2012	8/2015

This document shall not be reproduced, except in full or in part, without the written approval of MVG. The information contained herein is to be used only for the purpose for which it is submitted and is not to be released in whole or part without written approval of MVG.

SAR Reference Dipole Calibration Report

Ref : ACR.92.6.15.SATU.A

WALTEK SERVICES (SHENZHEN) CO., LTD
1/F., FUKANGTAI BUILDING, WEST BAIMA ROAD, SONGGANG STREET
BAOAN DISTRICT, SHENZHEN GUANGDONG 518105, CHINA

MVG COMOSAR REFERENCE DIPOLE
FREQUENCY: 1900 MHZ
SERIAL NO.: SN 09/15 DIP 1G900-361

Calibrated at MVG US
2105 Barrett Park Dr. - Kennesaw, GA 30144

03/16/2015

Summary:

This document presents the method and results from an accredited SAR reference dipole calibration performed in MVG USA using the COMOSAR test bench. All calibration results are traceable to national metrology institutions.

SAR REFERENCE DIPOLE CALIBRATION REPORT

Ref: ACR.92.6.15.SATU.A

	Name	*Function*	*Date*	*Signature*
Prepared by :	Jérôme LUC	Product Manager	4/2/2015	
Checked by :	Jérôme LUC	Product Manager	4/2/2015	
Approved by :	Kim RUTKOWSKI	Quality Manager	4/2/2015	

	Customer Name
Distribution :	Waltek Services (Shenzhen) Co., Ltd

Issue	*Date*	*Modifications*
A	4/2/2015	Initial release

This document shall not be reproduced, except in full or in part, without the written approval of MVG. The information contained herein is to be used only for the purpose for which it is submitted and is not to be released in whole or part without written approval of MVG.

TABLE OF CONTENTS

1 Introduction 4
2 Device Under Test 4
3 Product Description 4
3.1 General Information 4
4 Measurement Method 5
4.1 Return Loss Requirements 5
4.2 Mechanical Requirements 5
5 Measurement Uncertainty 5
5.1 Return Loss 5
5.2 Dimension Measurement 5
5.3 Validation Measurement 5
6 Calibration Measurement Results 6
6.1 Return Loss and Impedance In Head Liquid 6
6.2 Return Loss and Impedance In Body Liquid 6
6.3 Mechanical Dimensions 7
7 Validation measurement 7
7.1 Head Liquid Measurement 7
7.2 SAR Measurement Result With Head Liquid 8
7.3 Body Liquid Measurement 9
7.4 SAR Measurement Result With Body Liquid 10
8 List of Equipment 12

This document shall not be reproduced, except in full or in part, without the written approval of MVG. The information contained herein is to be used only for the purpose for which it is submitted and is not to be released in whole or part without written approval of MVG.

1 INTRODUCTION

This document contains a summary of the requirements set forth by the IEEE 1528, FCC KDBs and CEI/IEC 62209 standards for reference dipoles used for SAR measurement system validations and the measurements that were performed to verify that the product complies with the fore mentioned standards.

2 DEVICE UNDER TEST

Device Under Test	
Device Type	COMOSAR 1900 MHz REFERENCE DIPOLE
Manufacturer	MVG
Model	SID1900
Serial Number	SN 09/15 DIP 1G900-361
Product Condition (new / used)	New

A yearly calibration interval is recommended.

3 PRODUCT DESCRIPTION

3.1 GENERAL INFORMATION

MVG's COMOSAR Validation Dipoles are built in accordance to the IEEE 1528, FCC KDBs and CEI/IEC 62209 standards. The product is designed for use with the COMOSAR test bench only.

Figure 1 – *MVG COMOSAR Validation Dipole*

This document shall not be reproduced, except in full or in part, without the written approval of MVG. The information contained herein is to be used only for the purpose for which it is submitted and is not to be released in whole or part without written approval of MVG.

4 MEASUREMENT METHOD

The IEEE 1528, FCC KDBs and CEI/IEC 62209 standards provide requirements for reference dipoles used for system validation measurements. The following measurements were performed to verify that the product complies with the fore mentioned standards.

4.1 RETURN LOSS REQUIREMENTS

The dipole used for SAR system validation measurements and checks must have a return loss of -20 dB or better. The return loss measurement shall be performed against a liquid filled flat phantom, with the phantom constucted as outlined in the fore mentioned standards.

4.2 MECHANICAL REQUIREMENTS

The IEEE Std. 1528 and CEI/IEC 62209 standards specify the mechanical components and dimensions of the validation dipoles, with the dimensions frequency and phantom shell thickness dependent. The COMOSAR test bench employs a 2 mm phantom shell thickness therefore the dipoles sold for use with the COMOSAR test bench comply with the requirements set forth for a 2 mm phantom shell thickness.

5 MEASUREMENT UNCERTAINTY

All uncertainties listed below represent an expanded uncertainty expressed at approximately the 95% confidence level using a coverage factor of k=2, traceable to the Internationally Accepted Guides to Measurement Uncertainty.

5.1 RETURN LOSS

The following uncertainties apply to the return loss measurement:

Frequency band	Expanded Uncertainty on Return Loss
400-6000MHz	0.1 dB

5.2 DIMENSION MEASUREMENT

The following uncertainties apply to the dimension measurements:

Length (mm)	Expanded Uncertainty on Length
3 - 300	0.05 mm

5.3 VALIDATION MEASUREMENT

The guidelines outlined in the IEEE 1528, FCC KDBs, CENELEC EN50361 and CEI/IEC 62209 standards were followed to generate the measurement uncertainty for validation measurements.

This document shall not be reproduced, except in full or in part, without the written approval of MVG. The information contained herein is to be used only for the purpose for which it is submitted and is not to be released in whole or part without written approval of MVG.

Scan Volume	Expanded Uncertainty
1 g	20.3 %
10 g	20.1 %

6 CALIBRATION MEASUREMENT RESULTS

6.1 RETURN LOSS AND IMPEDANCE IN HEAD LIQUID

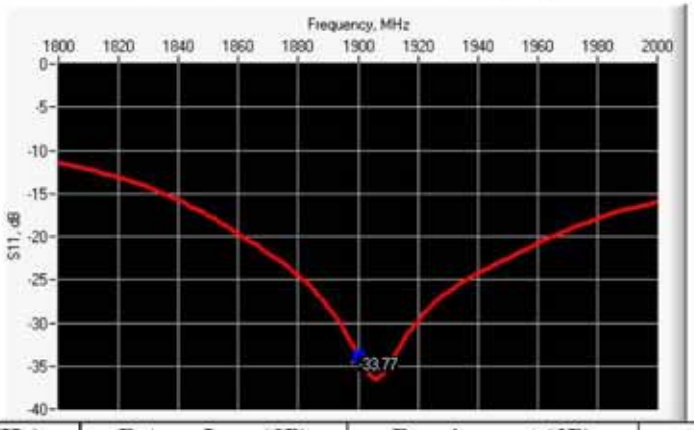

Frequency (MHz)	Return Loss (dB)	Requirement (dB)	Impedance
1900	-33.77	-20	49.9 Ω - 2.0 jΩ

6.2 RETURN LOSS AND IMPEDANCE IN BODY LIQUID

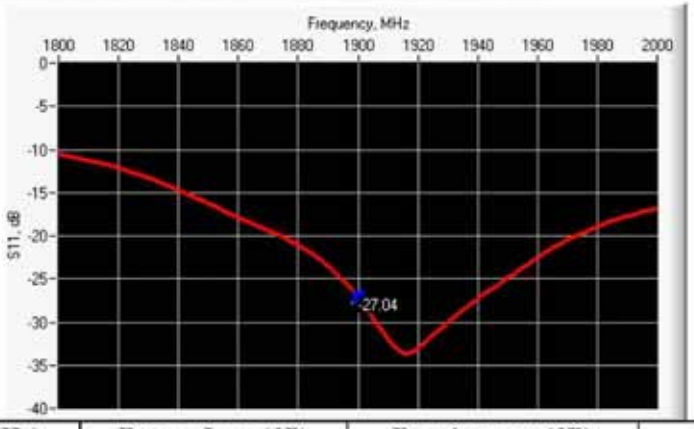

Frequency (MHz)	Return Loss (dB)	Requirement (dB)	Impedance
1900	-27.04	-20	45.8 Ω - 1.5 jΩ

This document shall not be reproduced, except in full or in part, without the written approval of MVG. The information contained herein is to be used only for the purpose for which it is submitted and is not to be released in whole or part without written approval of MVG.

6.3 MECHANICAL DIMENSIONS

Frequency MHz	L mm		h mm		d mm	
	required	measured	required	measured	required	measured
300	420.0 ±1 %.		250.0 ±1 %.		6.35 ±1 %.	
450	290.0 ±1 %.		166.7 ±1 %.		6.35 ±1 %.	
750	176.0 ±1 %.		100.0 ±1 %.		6.35 ±1 %.	
835	161.0 ±1 %.		89.8 ±1 %.		3.6 ±1 %.	
900	149.0 ±1 %.		83.3 ±1 %.		3.6 ±1 %.	
1450	89.1 ±1 %.		51.7 ±1 %.		3.6 ±1 %.	
1500	80.5 ±1 %.		50.0 ±1 %.		3.6 ±1 %.	
1640	79.0 ±1 %.		45.7 ±1 %.		3.6 ±1 %.	
1750	75.2 ±1 %.		42.9 ±1 %.		3.6 ±1 %.	
1800	72.0 ±1 %.		41.7 ±1 %.		3.6 ±1 %.	
1900	68.0 ±1 %.	PASS	39.5 ±1 %.	PASS	3.6 ±1 %.	PASS
1950	66.3 ±1 %.		38.5 ±1 %.		3.6 ±1 %.	
2000	64.5 ±1 %.		37.5 ±1 %.		3.6 ±1 %.	
2100	61.0 ±1 %.		35.7 ±1 %.		3.6 ±1 %.	
2300	55.5 ±1 %.		32.6 ±1 %.		3.6 ±1 %.	
2450	51.5 ±1 %.		30.4 ±1 %.		3.6 ±1 %.	
2600	48.5 ±1 %.		28.8 ±1 %.		3.6 ±1 %.	
3000	41.5 ±1 %.		25.0 ±1 %.		3.6 ±1 %.	
3500	37.0±1 %.		26.4 ±1 %.		3.6 ±1 %.	
3700	34.7±1 %.		26.4 ±1 %.		3.6 ±1 %.	

7 VALIDATION MEASUREMENT

The IEEE Std. 1528, FCC KDBs and CEI/IEC 62209 standards state that the system validation measurements must be performed using a reference dipole meeting the fore mentioned return loss and mechanical dimension requirements. The validation measurement must be performed against a liquid filled flat phantom, with the phantom constructed as outlined in the fore mentioned standards. Per the standards, the dipole shall be positioned below the bottom of the phantom, with the dipole length centered and parallel to the longest dimension of the flat phantom, with the top surface of the dipole at the described distance from the bottom surface of the phantom.

7.1 HEAD LIQUID MEASUREMENT

Frequency MHz	Relative permittivity (ε_r')		Conductivity (σ) S/m	
	required	measured	required	measured
300	45.3 ±5 %		0.87 ±5 %	
450	43.5 ±5 %		0.87 ±5 %	

This document shall not be reproduced, except in full or in part, without the written approval of MVG. The information contained herein is to be used only for the purpose for which it is submitted and is not to be released in whole or part without written approval of MVG.

750	41.9 ±5 %		0.89 ±5 %	
835	41.5 ±5 %		0.90 ±5 %	
900	41.5 ±5 %		0.97 ±5 %	
1450	40.5 ±5 %		1.20 ±5 %	
1500	40.4 ±5 %		1.23 ±5 %	
1640	40.2 ±5 %		1.31 ±5 %	
1750	40.1 ±5 %		1.37 ±5 %	
1800	40.0 ±5 %		1.40 ±5 %	
1900	40.0 ±5 %	PASS	1.40 ±5 %	PASS
1950	40.0 ±5 %		1.40 ±5 %	
2000	40.0 ±5 %		1.40 ±5 %	
2100	39.8 ±5 %		1.49 ±5 %	
2300	39.5 ±5 %		1.67 ±5 %	
2450	39.2 ±5 %		1.80 ±5 %	
2600	39.0 ±5 %		1.96 ±5 %	
3000	38.5 ±5 %		2.40 ±5 %	
3500	37.9 ±5 %		2.91 ±5 %	

7.2 SAR MEASUREMENT RESULT WITH HEAD LIQUID

The IEEE Std. 1528 and CEI/IEC 62209 standards state that the system validation measurements should produce the SAR values shown below (for phantom thickness of 2 mm), within the uncertainty for the system validation. All SAR values are normalized to 1 W forward power. In bracket, the measured SAR is given with the used input power.

Software	OPENSAR V4
Phantom	SN 20/09 SAM71
Probe	SN 18/11 EPG122
Liquid	Head Liquid Values: eps' : 40.9 sigma : 1.43
Distance between dipole center and liquid	10.0 mm
Area scan resolution	dx=8mm/dy=8mm
Zoon Scan Resolution	dx=8mm/dy=8m/dz=5mm
Frequency	1900 MHz
Input power	20 dBm
Liquid Temperature	21 °C
Lab Temperature	21 °C
Lab Humidity	45 %

Frequency MHz	1 g SAR (W/kg/W)		10 g SAR (W/kg/W)	
	required	measured	required	measured
300	2.85		1.94	
450	4.58		3.06	
750	8.49		5.55	

This document shall not be reproduced, except in full or in part, without the written approval of MVG. The information contained herein is to be used only for the purpose for which it is submitted and is not to be released in whole or part without written approval of MVG.

835	9.56		6.22	
900	10.9		6.99	
1450	29		16	
1500	30.5		16.8	
1640	34.2		18.4	
1750	36.4		19.3	
1800	38.4		20.1	
1900	39.7	39.37 (3.94)	20.5	20.51 (2.05)
1950	40.5		20.9	
2000	41.1		21.1	
2100	43.6		21.9	
2300	48.7		23.3	
2450	52.4		24	
2600	55.3		24.6	
3000	63.8		25.7	
3500	67.1		25	

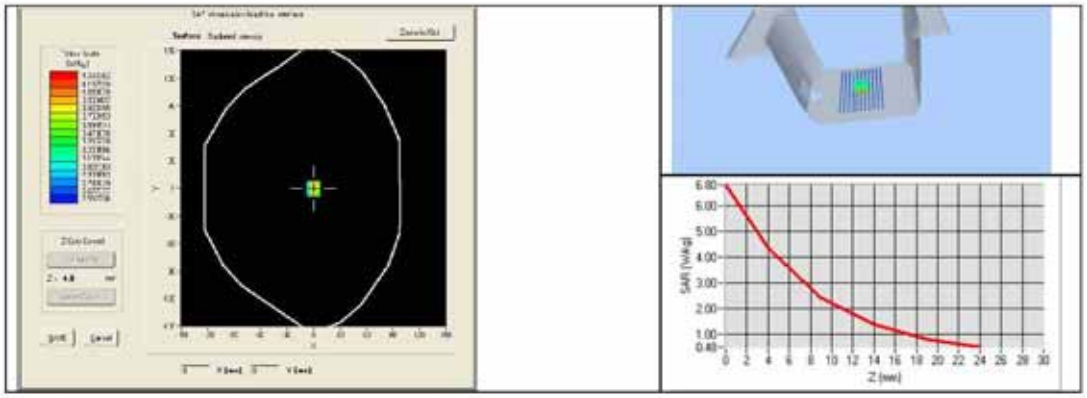

7.3 BODY LIQUID MEASUREMENT

Frequency MHz	Relative permittivity (ε_r')		Conductivity (σ) S/m	
	required	measured	required	measured
150	61.9 ±5 %		0.80 ±5 %	
300	58.2 ±5 %		0.92 ±5 %	
450	56.7 ±5 %		0.94 ±5 %	
750	55.5 ±5 %		0.96 ±5 %	
835	55.2 ±5 %		0.97 ±5 %	
900	55.0 ±5 %		1.05 ±5 %	
915	55.0 ±5 %		1.06 ±5 %	

This document shall not be reproduced, except in full or in part, without the written approval of MVG. The information contained herein is to be used only for the purpose for which it is submitted and is not to be released in whole or part without written approval of MVG.

1450	54.0 ±5 %		1.30 ±5 %	
1610	53.8 ±5 %		1.40 ±5 %	
1800	53.3 ±5 %		1.52 ±5 %	
1900	53.3 ±5 %	PASS	1.52 ±5 %	PASS
2000	53.3 ±5 %		1.52 ±5 %	
2100	53.2 ±5 %		1.62 ±5 %	
2450	52.7 ±5 %		1.95 ±5 %	
2600	52.5 ±5 %		2.16 ±5 %	
3000	52.0 ±5 %		2.73 ±5 %	
3500	51.3 ±5 %		3.31 ±5 %	
5200	49.0 ±10 %		5.30 ±10 %	
5300	48.9 ±10 %		5.42 ±10 %	
5400	48.7 ±10 %		5.53 ±10 %	
5500	48.6 ±10 %		5.65 ±10 %	
5600	48.5 ±10 %		5.77 ±10 %	
5800	48.2 ±10 %		6.00 ±10 %	

7.4 SAR MEASUREMENT RESULT WITH BODY LIQUID

Software	OPENSAR V4
Phantom	SN 20/09 SAM71
Probe	SN 18/11 EPG122
Liquid	Body Liquid Values: eps' : 53.9 sigma : 1.55
Distance between dipole center and liquid	10.0 mm
Area scan resolution	dx=8mm/dy=8mm
Zoon Scan Resolution	dx=8mm/dy=8m/dz=5mm
Frequency	1900 MHz
Input power	20 dBm
Liquid Temperature	21 °C
Lab Temperature	21 °C
Lab Humidity	45 %

Frequency MHz	1 g SAR (W/kg/W)	10 g SAR (W/kg/W)
	measured	measured
1900	38.58 (3.86)	20.37 (2.04)

This document shall not be reproduced, except in full or in part, without the written approval of MVG. The information contained herein is to be used only for the purpose for which it is submitted and is not to be released in whole or part without written approval of MVG.

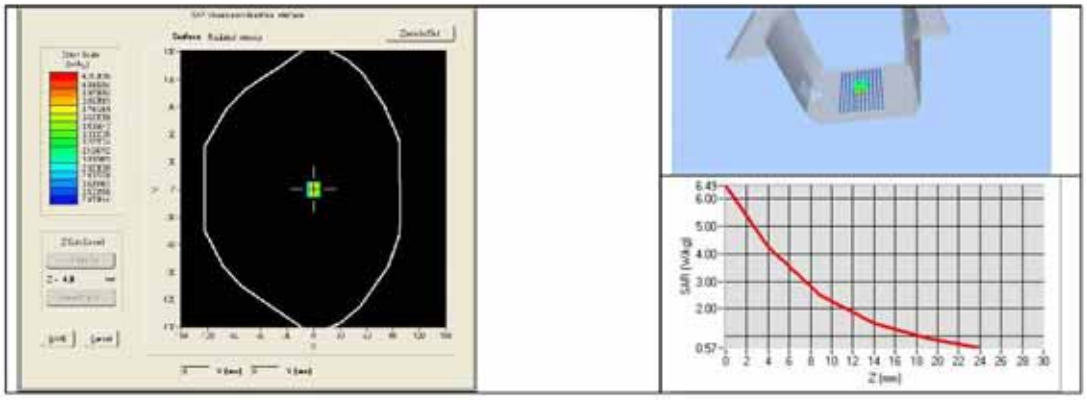

This document shall not be reproduced, except in full or in part, without the written approval of MVG. The information contained herein is to be used only for the purpose for which it is submitted and is not to be released in whole or part without written approval of MVG.

8 LIST OF EQUIPMENT

Equipment Summary Sheet				
Equipment Description	**Manufacturer / Model**	**Identification No.**	**Current Calibration Date**	**Next Calibration Date**
SAM Phantom	MVG	SN-20/09-SAM71	Validated. No cal required.	Validated. No cal required.
COMOSAR Test Bench	Version 3	NA	Validated. No cal required.	Validated. No cal required.
Network Analyzer	Rhode & Schwarz ZVA	SN100132	02/2013	02/2016
Calipers	Carrera	CALIPER-01	12/2013	12/2016
Reference Probe	MVG	EPG122 SN 18/11	10/2014	10/2015
Multimeter	Keithley 2000	1188656	12/2013	12/2016
Signal Generator	Agilent E4438C	MY49070581	12/2013	12/2016
Amplifier	Aethercomm	SN 046	Characterized prior to test. No cal required.	Characterized prior to test. No cal required.
Power Meter	HP E4418A	US38261498	12/2013	12/2016
Power Sensor	HP ECP-E26A	US37181460	12/2013	12/2016
Directional Coupler	Narda 4216-20	01386	Characterized prior to test. No cal required.	Characterized prior to test. No cal required.
Temperature and Humidity Sensor	Control Company	11-661-9	8/2012	8/2015

This document shall not be reproduced, except in full or in part, without the written approval of MVG. The information contained herein is to be used only for the purpose for which it is submitted and is not to be released in whole or part without written approval of MVG.

15 SAR System Photos

Liquid depth ≥ 15cm

16 Setup Photos

Right Head Check	**Right Head Tilt**
Left Head Cheek	**Left Head Tilt**
	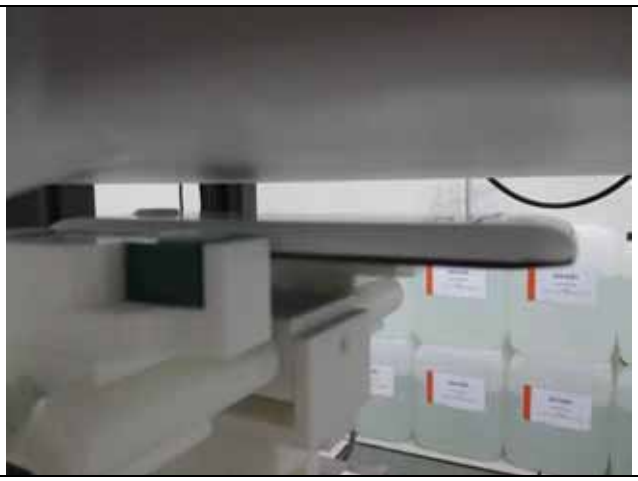
Body-Worn(LCD UP)	**Body-Worn(LCD Down)**

Body-Worn(RIGHT EDGE)	**Body-Worn(LEFT EDGE)**
Body-Worn(BOTTOM EDGE)	

17 EUT Photos

Front side

Back side