Safety Warnings And Important Notes

WARNING! Permanent hearing loss may result from long-term exposure to sound at high volumes. Use as low a volume as possible.

Speakers are capable of delivering sounds at loud volumes and high-pitched tones. Under certain circumstances, exposure to such sounds can result in permanent hearing loss damage. The volume level may vary based on conditions such as the radio you are using and volume settings. Avoid prolonged use of the speaker at excessive sound pressure levels. Please read the Safety Guidelines below prior to using the speaker.

Reduce the risk of hearing damage by following these safety guidelines during the use of the product:

- Turn the volume control to its lowest level, when connecting the speaker and then
- Slowly adjust the volume control to a comfortable level.
- Keep the volume at the lowest level possible;
- If increased volume is necessary, adjust the volume control slowly
- If you experience discomfort or ringing in your ears, immediately discontinue using the speaker.

With continued use at a high volume, your ears may become accustomed to the sound level, which may result in permanent damage to your hearing without any noticeable discomfort.

Safety information!

- Use of a speaker will impair your ability to hear other sounds. Use caution while using your speaker when you are engaging in any activity that requires your full attention.
- If you have a pacemaker or other electrical medical devices, you should consult your physician before using the product.
- This package contains small parts that may be hazardous to children and should be kept out of reach of children at all times. The product is not a toy – never allow children to play with the product. The bags themselves or the many small parts they contain may cause choking if ingested.
- Never try to dismantle the product yourself, or push objects of any kind into the product, as this may cause short circuits which could result in a fire or electric shock.
- None of the components can be replaced or repaired by users. Only authorized dealers or service centers may open the product. If any parts of your product require replacement for any reason, including normal wear and tear or breakage, contact your dealer.
- Avoid exposing your product to rain, moisture or other liquids to protect against damage to the product or injury to you.
- If the product overheats, if the product has been dropped or damaged, if the product has a damaged cord or plug, or if the product has been dropped in a liquid, discontinue use and contact Importer/dealer
- Never mount or store the product over any airbag deployment area, as serious injury may result when an airbag deploys.
- Do not use in areas where there are explosive hazards.
- Observe all signs and instructions that require an electrical device or RF radio product to be switched off in designated areas such as hospitals or aircrafts.
- Dispose of the product according to local standards and regulations.
- CAUTION-ELECTRIC TOY: Not recommended for children under 8 years of age. As with all electric products, precautions should be observed during handling and use to prevent electric shock.

Remember: Always drive safely, avoid distractions and follow local laws!

Use of the speaker while operating a motor vehicle may be regulated by local laws. Check with your local authorities. Use caution while using your speaker when you are engaging in any activity that requires your full attention. While engaging in any such activity turning off your speaker will keep you from being distracted, so as to avoid accident or injury.

Built-in battery care: Please observe the following if the product contains a battery

- Your product is powered by a rechargeable battery. The full performance of a new battery is achieved only after two or three complete charge and discharge cycles.
- The battery can be charged and discharged hundreds of times, but will eventually wear out.
- Unplug the charger from the electrical plug and the product when not in use. Do not leave a fully charged battery connected to a charger, since overcharging may shorten its lifetime.
- If left unused, a fully charged battery will lose its charge over time.
- Leaving the product in hot or cold places, such as in a closed car in the summer and winter conditions, will reduce the capacity and lifetime of the battery.
- Always try to keep the battery between 0°C and 45°C (32°F and 113°F). A product with a hot or cold battery may not work temporarily, even when the battery is fully charged. Battery performance is particularly limited in temperatures well below freezing.
- Battery warning!
- "Caution" – The battery used in the product may present a risk of fire or chemical burn if mistreated.
- The battery in your product can not be removed or replaced by the user. Any attempt to do so is risky and may result in damage of the product. Use of other batteries may present a risk of fire or explosion and the warranty will be terminated.
- Only recharge your battery with the provided approved chargers designated for this product.
- Dispose of batteries according to local regulations. Please recycle when possible.
- Do not dispose the battery as household waste or in a fire as it may explode.
- Batteries may explode if damaged.

Charger care:

- Do not attempt to charge your speaker with anything other than the AC adapter provided. The use of any other types may damage or destroy the speaker and could be dangerous. Use of other chargers may invalidate any approval or warranty.
- For availability of approved enhancements, please check with your dealer.
- Charge the product according to the instructions supplied with the product.\
- Charger warning!
- When you disconnect the power cord or any enhancement, grasp and pull the plug, not the cord.
- Never use a charger that is damaged.
- Do not attempt to disassemble the charger as it may expose you to dangerous electric shock. Incorrect reassembly can cause electric shock or fire when the product is subsequently used.
- Avoid charging your speaker in extremely high or low temperatures and do not use the charger outdoors or in damp areas.
- Indoor use only

Manufactured and Imported by: CROOVE BROOKLYN, NY 11205 www.croove.com
© 2018 CROOVE
MADE IN CHINA
082018-107

CROOVE

STAGE KARAOKE
with dual microphones

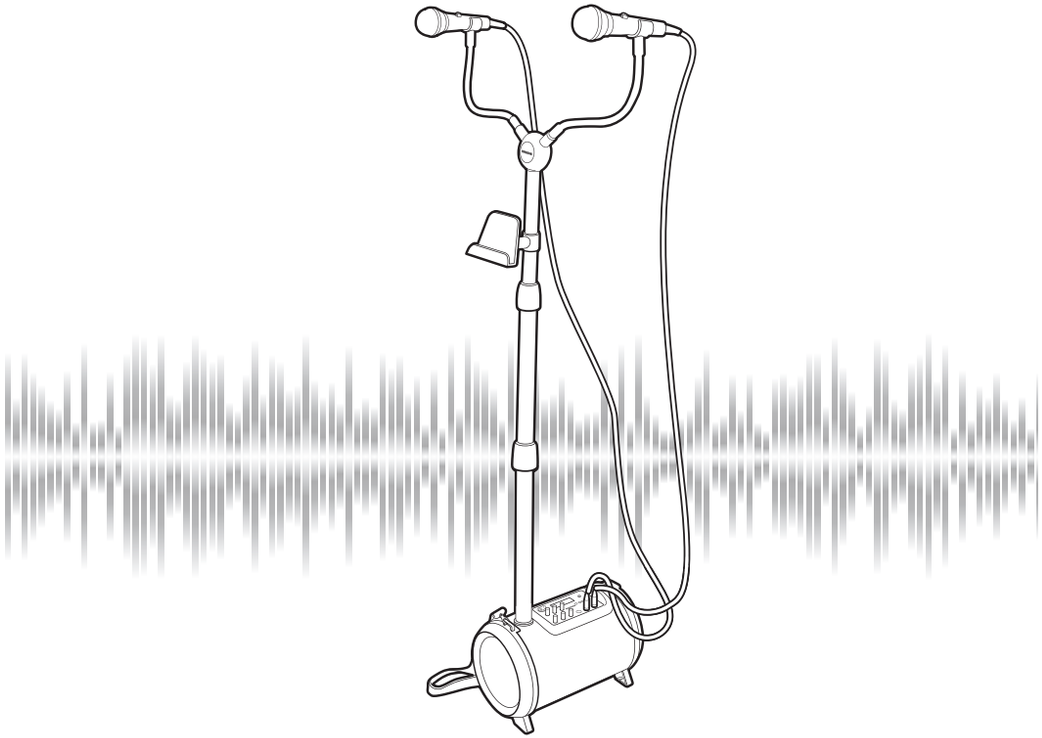

OWNER'S MANUAL

Item #2700

Thank you for purchasing the Croove Stage Karaoke Player! Find your rhythm, channel that inner maestro or diva, and put on a show that'll rock the audience!

Please read the entire manual prior to operation.
Please keep these instructions for future reference.

CAUTION-ELECTRIC TOY: NOT RECOMMENDED FOR CHILDREN UNDER 8 YEARS OF AGE.

Contents:

1. Speaker
2. Upper, Middle and Lower Parts of Stand Pole
3. 2 Flexible Arms
4. Adjustable Strap
5. Device Holder
6. 2 Mics
7. 2 AUX Cables
8. Wall Adapter

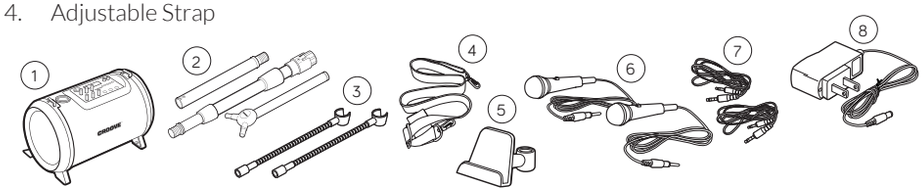

Overview:

1. On/Off Power Switch
2. Music Volume Dial
3. Bass Control Dial
4. Echo Control Dial
5. LCD Display Screen
6. Battery Life Indicator
7. Power Input Port DC6V
8. AUX-OUT
9. Mode Button
   - Press repeatedly to select in the following order: Bluetooth, SD Card, USB Flash Drive, or AUX
   - Press and hold 2-3 seconds to turn the LED lights ON/OFF
10. PLAY/PAUSE Button
11. NEXT/PREVIOUS Button
12. Guitar Jack
13. Mic 1 and 2 Input Jacks
14. SD Card Slot
15. USB Port
16. Line-In Jack
17. Guitar Volume Control Dial
18. Mic 1 and 2 Volume Control Dials
19. Speakers
20. Removable Adjustable Strap
21. LED Flashing Lights
22. Adjustable Stand
23. Device Holder
24. Flexible Arms
25. Microphones

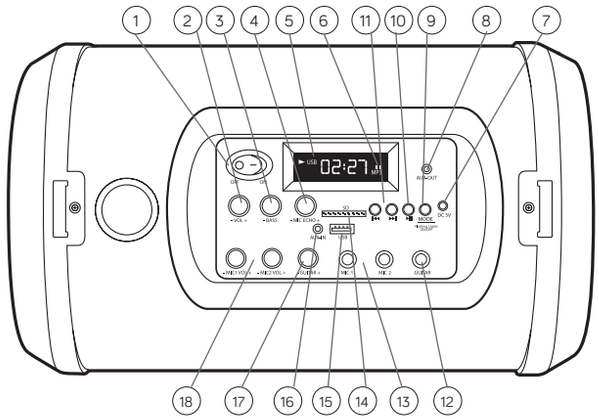

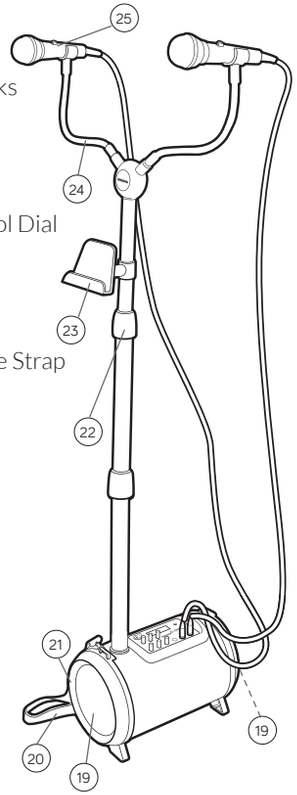

⚠ CAUTION
SUPERVISION REQUIRED:

ELECTRIC DEVICE
UNPLUG WHEN NOT IN USE
Input: 100-240V ~ 50/60Hz 0.3A
Output: 6.0V⎓ 500mA

Assembly Instructions:

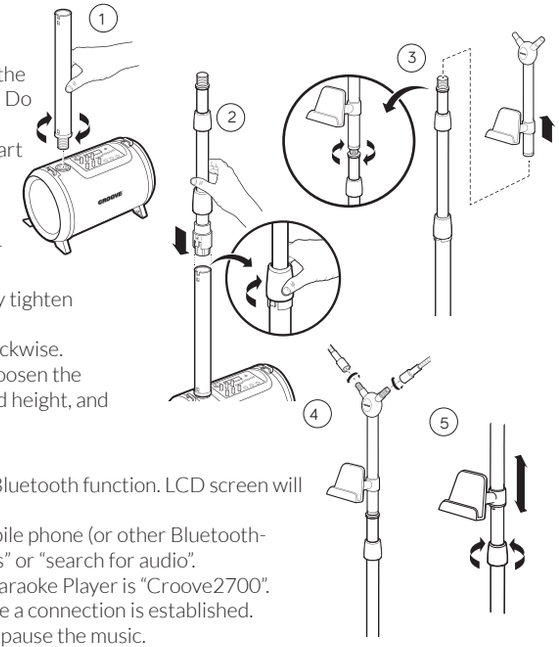

1. Attach the Lower Part of Stand Pole to the Speaker and turn clockwise until stable. Do not tighten more than necessary.
2. Insert the Middle Part into the Lower Part of Stand Pole, aligning the holes and notches correctly. Then, firmly tighten the plastic ring by turning clockwise.
3. Slide the Device Holder onto the Upper Part of the Stand Pole and attach to the Middle Part of the Stand Pole, firmly tighten together by turning clockwise.
4. Attach both flexible arms by turning clockwise.
5. To adjust the height of the Stand Pole, loosen the upper ring, shift the pole to your desired height, and re-tighten the upper ring to secure.

Bluetooth Mode:

1. Press the Mode Button once to select Bluetooth function. LCD screen will display the word "Blue".
2. On the Bluetooth interface of your mobile phone (or other Bluetooth-enabled device), select "scan for devices" or "search for audio".
3. The pairing code of the Croove Stage Karaoke Player is "Croove2700". Select to pair. The player will sound once a connection is established.
4. Press the 'Play/Pause' button to play or pause the music.
5. Press the PREVIOUS or NEXT Buttons to play the previous or next track.

- When the player is powered on and Bluetooth Mode is selected, player will automatically search for and attempt a connection to the most recently paired Bluetooth device.
- Before pairing player with a new device, either turn off the Bluetooth function on the previously paired Bluetooth-enabled device, or remove out of range of the music player.

USB Mode:

1. Insert a USB Flash Drive into the USB Port located on top of Speaker.
2. Press Mode Button repeatedly to select USB Mode. LCD screen will display "USB".
3. Press the PLAY/PAUSE Button to play or pause music.
4. Press the PREVIOUS or NEXT Buttons to play the previous or next track.
5. Press and hold PREVIOUS or NEXT Buttons to rewind or skip to any point in the track.

Note: The Croove Player can only play files in MP3 or WAV format. To play tracks stored in any other file format, please first convert to MP3.

SD Card Mode:

1. Insert SD Card into SD Slot located on top of Speaker.
2. Press Mode Button repeatedly to select SD Card Mode. LCD screen will display "SD".
3. Refer to steps 3-5 of USB Mode.

Line-In Mode:

1. Plug in external device via the included AUX cable.
2. Press the Mode Button repeatedly until Line-in Mode is selected. LCD screen will display "Line".

Note: The player is unable to control music play for Line-In Mode. All track play should be selected on the interface of the connected external device.

Battery Strength: Battery Strength is indicated by the number of bars on the LCD screen. Three bars indicate a fully charged battery, two bars indicate weaker battery, and one bar indicates low battery.

Function Recall: Croove Player will automatically revert to previously selected mode when powered on with a device connected via hardware interface such as Bluetooth, Line-In, USB, or SD Card. Player will revert to Bluetooth Mode when powered on with no external devices connected.

Note: Use the AUX-OUT port to connect the device to additional speakers.

FCC Statements

FCC Caution:

1. This device complies with Part 15 of the FCC rules/ Industry Canada license-exempt RSS standard(s). Operation is subject to the following two conditions:
   (1) This device may not cause harmful interference, and
   (2) This device must accept any interference received, including interference that may cause undesired operation.
2. This device and its antenna(s) must not be co-located or operating in conjunction with any other antenna or transmitter.
3. Changes or modifications to this unit not expressly approved by the party responsible for compliance could void the user authority to operate the equipment.

FCC Radiation Exposure Statement:
This equipment complies with FCC radiation exposure limits set forth for an uncontrolled environment. This equipment should be installed and operated with minimum distance 20cm between the radiator & your body.

Note:
This equipment has been tested and found to comply with the limits for a Class B digital device, pursuant to Part 15 of the FCC Rules. These limits are designed to provide reasonable protection against harmful interference in a residential installation. This equipment generates, uses, and can radiate radio frequency energy and, if not installed and used in accordance with the instructions, may cause harmful interference to radio communications. However, there is no guarantee that interference will not occur in a particular installation. If this equipment does cause harmful interference to radio or television reception, which can be determined by turning the equipment off and on, the user is encouraged to try to correct the interference by one or more of the following measures:

- Reorient or relocate the receiving antenna.
- Increase the separation between the equipment and receiver.
- Connect the equipment into a circuit different from that to which the receiver is connected.
- Consult the dealer or an experienced radio TV technician for help.